IEC 63093-13

Edition 1.0 2019-02

INTERNATIONAL STANDARD

NORME INTERNATIONALE

Ferrite cores – Guidelines on dimensions and the limits of surface irregularities – Part 13: PQ-cores

Noyaux ferrites – Lignes directrices relatives aux dimensions et aux limites des irrégularités de surface – Partie 13: Noyaux PQ

IEC 63093-13:2019-02(en-fr)

Documents
Document Sharing Hub
Full document details: IEC 63093-13-2019

THIS PUBLICATION IS COPYRIGHT PROTECTED
Copyright © 2019 IEC, Geneva, Switzerland

All rights reserved. Unless otherwise specified, no part of this publication may be reproduced or utilized in any form or by any means, electronic or mechanical, including photocopying and microfilm, without permission in writing from either IEC or IEC's member National Committee in the country of the requester. If you have any questions about IEC copyright or have an enquiry about obtaining additional rights to this publication, please contact the address below or your local IEC member National Committee for further information.

Droits de reproduction réservés. Sauf indication contraire, aucune partie de cette publication ne peut être reproduite ni utilisée sous quelque forme que ce soit et par aucun procédé, électronique ou mécanique, y compris la photocopie et les microfilms, sans l'accord écrit de l'IEC ou du Comité national de l'IEC du pays du demandeur. Si vous avez des questions sur le copyright de l'IEC ou si vous désirez obtenir des droits supplémentaires sur cette publication, utilisez les coordonnées ci-après ou contactez le Comité national de l'IEC de votre pays de résidence.

IEC Central Office
3, rue de Varembé
CH-1211 Geneva 20
Switzerland

Tel.: +41 22 919 02 11
info@iec.ch
www.iec.ch

About the IEC
The International Electrotechnical Commission (IEC) is the leading global organization that prepares and publishes International Standards for all electrical, electronic and related technologies.

About IEC publications
The technical content of IEC publications is kept under constant review by the IEC. Please make sure that you have the latest edition, a corrigendum or an amendment might have been published.

IEC publications search - webstore.iec.ch/advsearchform
The advanced search enables to find IEC publications by a variety of criteria (reference number, text, technical committee,…). It also gives information on projects, replaced and withdrawn publications.

IEC Just Published - webstore.iec.ch/justpublished
Stay up to date on all new IEC publications. Just Published details all new publications released. Available online and once a month by email.

IEC Customer Service Centre - webstore.iec.ch/csc
If you wish to give us your feedback on this publication or need further assistance, please contact the Customer Service Centre: sales@iec.ch.

Electropedia - www.electropedia.org
The world's leading online dictionary on electrotechnology, containing more than 22 000 terminological entries in English and French, with equivalent terms in 16 additional languages. Also known as the International Electrotechnical Vocabulary (IEV) online.

IEC Glossary - std.iec.ch/glossary
67 000 electrotechnical terminology entries in English and French extracted from the Terms and Definitions clause of IEC publications issued since 2002. Some entries have been collected from earlier publications of IEC TC 37, 77, 86 and CISPR.

A propos de l'IEC
La Commission Electrotechnique Internationale (IEC) est la première organisation mondiale qui élabore et publie des Normes internationales pour tout ce qui a trait à l'électricité, à l'électronique et aux technologies apparentées.

A propos des publications IEC
Le contenu technique des publications IEC est constamment revu. Veuillez vous assurer que vous possédez l'édition la plus récente, un corrigendum ou amendement peut avoir été publié.

Recherche de publications IEC - webstore.iec.ch/advsearchform
La recherche avancée permet de trouver des publications IEC en utilisant différents critères (numéro de référence, texte, comité d'études,…). Elle donne aussi des informations sur les projets et les publications remplacées ou retirées.

IEC Just Published - webstore.iec.ch/justpublished
Restez informé sur les nouvelles publications IEC. Just Published détaille les nouvelles publications parues. Disponible en ligne et une fois par mois par email.

Service Clients - webstore.iec.ch/csc
Si vous désirez nous donner des commentaires sur cette publication ou si vous avez des questions contactez-nous: sales@iec.ch.

Electropedia - www.electropedia.org
Le premier dictionnaire d'électrotechnologie en ligne au monde, avec plus de 22 000 articles terminologiques en anglais et en français, ainsi que les termes équivalents dans 16 langues additionnelles. Egalement appelé Vocabulaire Electrotechnique International (IEV) en ligne.

Glossaire IEC - std.iec.ch/glossary
67 000 entrées terminologiques électrotechniques, en anglais et en français, extraites des articles Termes et Définitions des publications IEC parues depuis 2002. Plus certaines entrées antérieures extraites des publications des CE 37, 77, 86 et CISPR de l'IEC.

Documents
Document Sharing Hub

Full document details: IEC 63093-13-2019

IEC 63093-13

Edition 1.0 2019-02

INTERNATIONAL STANDARD

NORME INTERNATIONALE

Ferrite cores – Guidelines on dimensions and the limits of surface irregularities – Part 13: PQ-cores

Noyaux ferrites – Lignes directrices relatives aux dimensions et aux limites des irrégularités de surface – Partie 13: Noyaux PQ

INTERNATIONAL
ELECTROTECHNICAL
COMMISSION

COMMISSION
ELECTROTECHNIQUE
INTERNATIONALE

ICS 29.100.10

ISBN 978-2-8322-6506-2

Warning! Make sure that you obtained this publication from an authorized distributor.
Attention! Veuillez vous assurer que vous avez obtenu cette publication via un distributeur agréé.

® Registered trademark of the International Electrotechnical Commission
Marque déposée de la Commission Electrotechnique Internationale

Documents
Document Sharing Hub

Full document details: IEC 63093-13-2019

CONTENTS

FOREWORD 4
1 Scope 6
2 Normative references 6
3 Terms and definitions 6
4 Primary dimensions 7
4.1 General 7
4.2 Dimensions of PQ-cores 7
4.2.1 Principal dimensions 7
4.2.2 Effective parameter and A_{min} values 7
4.3 Dimensional limits for coil formers 7
4.4 Pin locations and base outlines 7
4.5 Pin diameter 7
5 Mounting 12
6 Definitions and limits of surface irregularities 13
6.1 General 13
6.2 Examples of surface irregularities 13
6.3 Chips and ragged edges 13
6.3.1 General 13
6.3.2 Chips and ragged edges located on the mating surface 13
6.3.3 Chips and ragged edges located on the other surfaces 14
6.4 Cracks 16
6.5 Pull-out 17
6.6 Crystallites 17
6.7 Flash 17
6.8 Pores 18
Annex A (informative) PQ-cores design 19
Annex B (informative) Examples of allowable areas of chips 20
Annex C (normative) Example of a gauge to check the dimensions of PQ-cores meeting the primary dimensions 21
C.1 General 21
C.2 Procedure and requirements 22

Figure 1 – Dimensions of PQ-cores 7
Figure 2 – Dimensions of low-profile PQI-cores 9
Figure 3 – Main dimensions of coil formers for PQ-cores 11
Figure 4 – Pin locations and base outlines viewed from the upper side of the board 12
Figure 5 – Examples of surface irregularities 13
Figure 6 – Chips and ragged edges locations 14
Figure 7 – Cracks locations 16
Figure 8 – Pull-out location 17
Figure 9 – Crystallite location 17
Figure 10 – Flash location 18
Figure 11 – Pore location 18
Figure C.1 – Gauge dimensions 21

AVA Documents
Document Sharing Hub
Full document details: IEC 63093-13-2019

Table 1 – Dimensions of PQ-cores 8
Table 2 – Dimensions of low-profile PQI-cores 9
Table 3 – Effective parameter and A_{min} values for PQ-cores 10
Table 4 – Effective parameter and A_{min} values for low-profile PQI-cores 10
Table 5 – Dimensional limits for coil formers for PQ-cores 11
Table 6 – Area and length reference of irregularities for visual inspection 15
Table 7 – Limits for cracks 16
Table B.1 – Allowable areas of chips in mm^2 20
Table C.1 – Gauge dimensions 21

Documents
Document Sharing Hub
Full document details: IEC 63093-13-2019

INTERNATIONAL ELECTROTECHNICAL COMMISSION

FERRITE CORES – GUIDELINES ON DIMENSIONS AND THE LIMITS OF SURFACE IRREGULARITIES –

Part 13: PQ-cores

FOREWORD

1) The International Electrotechnical Commission (IEC) is a worldwide organization for standardization comprising all national electrotechnical committees (IEC National Committees). The object of IEC is to promote international co-operation on all questions concerning standardization in the electrical and electronic fields. To this end and in addition to other activities, IEC publishes International Standards, Technical Specifications, Publication(s)"). Their preparation is entrusted to technical committees; any IEC National Committee interested in the subject dealt with may participate in this preparatory work. International, governmental and non-governmental organizations liaising with the IEC also participate in this preparation. IEC collaborates closely with the International Organization for Standardization (ISO) in accordance with conditions determined by agreement between the two organizations.
2) The formal decisions or agreements of IEC on technical matters express, as nearly as possible, an international consensus of opinion on the relevant subjects since each technical committee has representation from all interested IEC National Committees.
3) IEC Publications have the form of recommendations for international use and are accepted by IEC National Committees in that sense. While all reasonable efforts are made to ensure that the technical content of IEC Publications is accurate, IEC cannot be held responsible for the way in which they are used or for any misinterpretation by any end user.
4) In order to promote international uniformity, IEC National Committees undertake to apply IEC Publications transparently to the maximum extent possible in their national and regional publications. Any divergence between any IEC Publication and the corresponding national or regional publication shall be clearly indicated in the latter.
5) IEC itself does not provide any attestation of conformity. Independent certification bodies provide conformity assessment services and, in some areas, access to IEC marks of conformity. IEC is not responsible for any services carried out by independent certification bodies.
6) All users should ensure that they have the latest edition of this publication.
7) No liability shall attach to IEC or its directors, employees, servants or agents including individual experts and members of its technical committees and IEC National Committees for any personal injury, property damage or other damage of any nature whatsoever, whether direct or indirect, or for costs (including legal fees) and expenses arising out of the publication, use of, or reliance upon, this IEC Publication or any other IEC Publications.
8) Attention is drawn to the Normative references cited in this publication. Use of the referenced publications is indispensable for the correct application of this publication.
9) Attention is drawn to the possibility that some of the elements of this IEC Publication may be the subject of patent rights. IEC shall not be held responsible for identifying any or all such patent rights.

International Standard IEC 63093-13 has been prepared by IEC technical committee 51: Magnetic components, ferrite and magnetic powder materials.

This first edition cancels and replaces the second edition of IEC 62317-13 published in 2015 and the first edition of IEC 60424-8 published in 2015. This edition constitutes a technical revision.

This edition includes the following significant technical changes with respect to the previous editions of IEC 62317-13 and IEC 60424-8:

a) IEC 63093-13 integrates IEC 62317-13 and IEC 60424-8;
b) IEC 60424-8:2015, Table 1, has been included in Annex B as Table B.1.

Documents
Document Sharing Hub
Full document details: IEC 63093-13-2019

The text of this International Standard is based on the following documents:

FDIS	Report on voting
51/1262/FDIS	51/1270/RVD

Full information on the voting for the approval of this International Standard can be found in the report on voting indicated in the above table.

This document has been drafted in accordance with the ISO/IEC Directives, Part 2.

A list of all parts in the IEC 63093 series, published under the general title *Ferrite cores – Guidelines on dimensions and the limits of surface irregularities* can be found on the IEC website.

The committee has decided that the contents of this document will remain unchanged until the stability date indicated on the IEC website under "http://webstore.iec.ch" in the data related to the specific document. At this date, the document will be

- reconfirmed,
- withdrawn,
- replaced by a revised edition, or
- amended.

Documents
Document Sharing Hub

Full document details: IEC 63093-13-2019

FERRITE CORES – GUIDELINES ON DIMENSIONS AND THE LIMITS OF SURFACE IRREGULARITIES –

Part 13: PQ-cores

1 Scope

This part of IEC 63093 specifies the dimensions that are of importance for mechanical interchangeability for a preferred range of PQ-cores and low-profile PQI-cores made of ferrite, and the locations of their terminal pins on a 2,54 mm printed wiring grid in relation to the base outlines of the cores. It also gives guidance on allowable limits of surface irregularities applicable to PQ-cores in accordance with the relevant generic specification.

The selection of core sizes for this document is based on the philosophy of including those sizes which are industrial standards, either by inclusion in a national standard, or by broad-based use in industry.

This document is a specification useful in the negotiations between ferrite core manufacturers and customers about surface irregularities.

The general considerations that the design of this range of cores is based upon are given in Annex A.

2 Normative references

The following documents are referred to in the text in such a way that some or all of their content constitutes requirements of this document. For dated references, only the edition cited applies. For undated references, the latest edition of the referenced document (including any amendments) applies.

IEC 60205, *Calculation of the effective parameters of magnetic piece parts*

IEC 60401-1, *Terms and nomenclature for cores made of magnetically soft ferrites – Part 1: Terms used for physical irregularities*

IEC 60424-1, *Ferrite cores – Guidelines on the limits of surface irregularities – Part 1: General specification*

3 Terms and definitions

For the purposes of this document, the terms and definitions given in IEC 60401-1 and IEC 60424-1 apply.

ISO and IEC maintain terminological databases for use in standardization at the following addresses:

- IEC Electropedia: available at http://www.electropedia.org/
- ISO Online browsing platform: available at http://www.iso.org/obp

Documents
Document Sharing Hub

Full document details: IEC 63093-13-2019

4 Primary dimensions

4.1 General

Compliance with the following requirements ensures mechanical interchangeability of complete assemblies and wound coil formers.

4.2 Dimensions of PQ-cores

4.2.1 Principal dimensions

The principal dimensions of PQ-cores shall be as given in Table 1 and those of the low-profile PQI-cores shall be as given in Table 2. See also Figure 1 and Figure 2. The dimensions of the cores may be checked by means of gauges. By way of example, a possible standard for these gauges is given in Annex C, although no relaxation of the requirements for the dimensions of the cores given in Table 1 and in Table 2 is permitted.

4.2.2 Effective parameter and A_{min} values

The effective parameter values for cores having the dimensions given in 4.2 are as shown in Table 3 and Table 4.

The definitions of effective parameters and their calculations shall be as given in IEC 60205.

4.3 Dimensional limits for coil formers

The main dimensions of coil formers suitable for use with a pair of PQ-cores shall be as given in Table 5. See also Figure 3.

4.4 Pin locations and base outlines

These shall be as shown in Figure 4.

4.5 Pin diameter

Coil former terminations (pins) shall be accepted by a gauge having 1,2 mm holes on a true position.

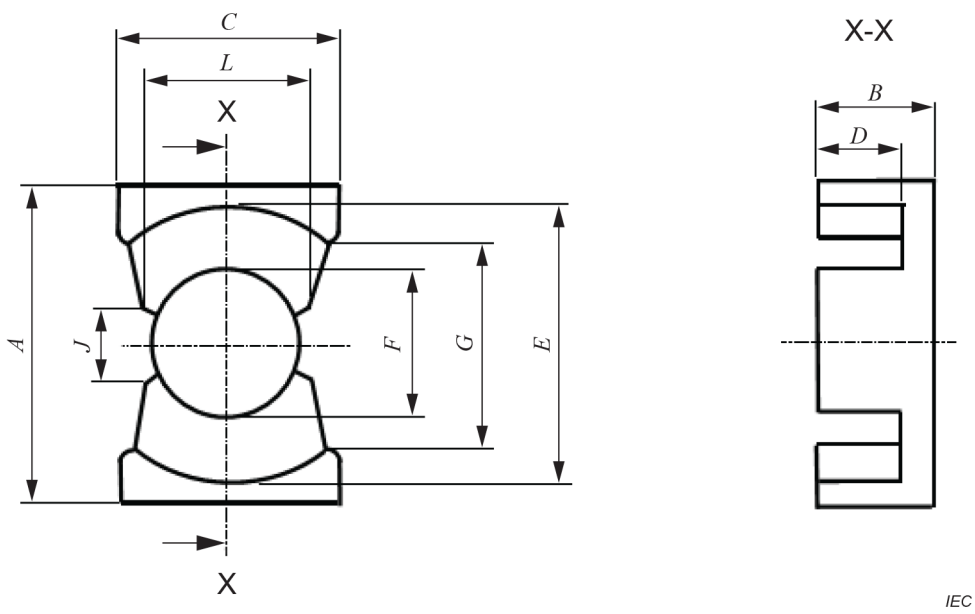

Figure 1 – Dimensions of PQ-cores

Documents
Document Sharing Hub
Full document details: IEC 63093-13-2019

Table 1 – Dimensions of PQ-cores

Size		*A* mm	*B* mm	*C* mm	*D* mm	*E* mm	*F* mm	*G* mm	*J* mm	*L* mm
PQ 16/11,6	Min.	16,10	5,70	10,90	3,20	14,10	6,80	8,80	3,1	8,5
	Nom.									
	Max.	16,70	5,90	11,50	3,50	14,70	7,20	10,40		
PQ 20/16	Min.	20,10	8,00	13,60	5,00	17,60	8,60	12,00	4,80	10,50
	Nom.									
	Max.	20,90	8,20	14,40	5,30	18,40	9,00	13,00		
PQ 20/20	Min.	20,10	10,00	13,60	7,00	17,60	8,60	12,00	4,80	10,50
	Nom.									
	Max.	20,90	10,20	14,40	7,30	18,40	9,00	13,00		
PQ 26/20	Min.	26,05	9,95	18,55	5,60	22,05	11,80	15,50	7,30	13,90
	Nom.									
	Max.	26,95	10,20	19,45	5,90	22,95	12,20	16,50		
PQ 26/25	Min.	26,05	12,25	18,55	7,90	22,05	11,80	15,50	7,30	13,90
	Nom									
	Max	26,95	12,50	19,45	8,20	22,95	12,20	16,50		
PQ 32/20	Min.	31,50	10,15	21,50	5,60	27,00	13,20	19,00	6,20	15,10
	Nom.									
	Max.	32,50	10,40	22,50	5,90	28,00	13,70	20,00		
PQ 32/30	Min.	31,50	15,05	21,50	10,50	27,00	13,20	19,00	6,20	15,10
	Nom.									
	Max.	32,50	15,30	22,50	10,80	28,00	13,70	20,00		
PQ 35/35	Min.	34,50	17,25	25,50	12,35	31,50	14,10	23,50	7,30	16,40
	Nom.									
	Max.	35,70	17,50	26,50	12,65	32,50	14,60	24,50		
PQ 40/40	Min.	39,70	19,75	27,40	14,60	36,40	14,60	28,00	7,75	16,80
	Nom.									
	Max.	41,30	20,00	28,60	14,90	37,60	15,20	29,00		
PQ 50/50	Min.	49,00	24,85	31,50	17,90	43,30	19,65	31,50	10,00	22,00
	Nom.									
	Max.	51,00	25,10	32,50	18,20	44,70	20,35	32,50		
PQ 65/54	Min.	63,70	26,80	39,20	17,75	52,00	25,55	39,20	12,00	27,50
	Nom.									
	Max.	66,30	27,20	40,80	18,25	54,00	26,45	40,80		
PQ 78/39	Min.	77,00	19,45	41,20	12,60	69,10	25,00	60,10	13,60	27,60
	Nom.									
	Max.	80,00	19,95	42,80	13,20	71,90	26,00	62,50		
PQ 107/87	Min.	105,00	43,10	68,50	27,50	93,70	40,20	72,50	22,80	43,70
	Nom.									
	Max.	109,00	43,90	71,50	28,50	97,30	41,80	75,30		

Documents
Document Sharing Hub
Full document details: IEC 63093-13-2019

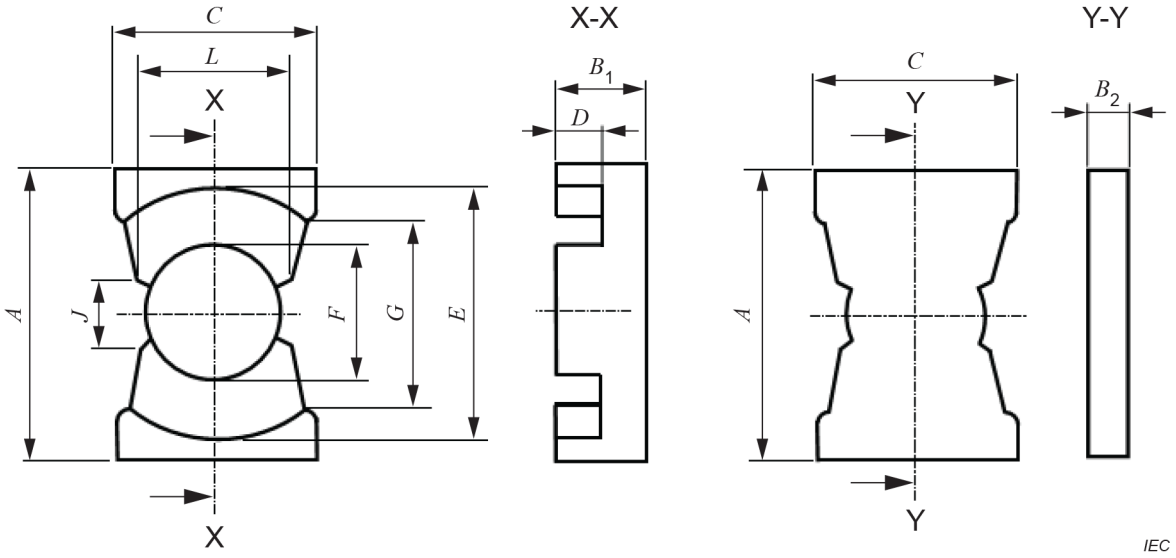

Figure 2 – Dimensions of low-profile PQI-cores

Table 2 – Dimensions of low-profile PQI-cores

Size		*A* mm	B_1 mm	B_2 mm	*C* mm	*D* mm	*E* mm	*F* mm	*G* mm	*J* mm	*L* mm
PQI 16/7,8	Min.	16,10	5,30	2,25	10,90	2,90	14,10	6,80	9,60		
	Nom.									3,90	8,40
	Max.	16,70	5,50	2,45	11,50	3,20	14,70	7,20	10,40		
PQI 20/9	Min.	20,10	5,90	2,85	13,60	2,90	17,60	8,60	12,00		
	Nom.									4,80	10,50
	Max.	20,90	6,10	3,05	14,40	3,20	18,40	9,00	12,50		
PQI 26/12	Min.	26,05	7,20	4,10	18,55	2,95	22,05	11,80	15,50		
	Nom.									7,30	13,90
	Max.	26,95	7,40	4,30	19,45	3,25	22,95	12,20	16,50		

Documents
Document Sharing Hub
Full document details: IEC 63093-13-2019

Table 3 – Effective parameter and A_{min} values for PQ-cores

Size	C_1 mm^{-1}	C_2 × 10^{-3} mm^{-3}	A_e mm^2	l_e mm	V_e mm^3	A_{min} [a] mm^2
PQ16/11,6	0,633 82	14,958	42,4	26,9	1 140	38,5
PQ 20/16	0,580 53	9,034 6	64,3	37,3	2 400	59,3
PQ 20/20	0,709 95	11,129	63,8	45,3	2 890	59,3
PQ 26/20	0,361 41	2,932 5	123	44,5	5 490	113
PQ 26/25	0,437 83	3,569 9	123	53,7	6 590	113
PQ 32/20	0,313 14	2,001 2	156	49,0	7 670	142
PQ 32/30	0,440 40	2,833 3	155	68,5	10 600	142
PQ 35/35	0,465 38	2,718 8	171	79,7	13 600	161
PQ 40/40	0,491 97	2,602 7	189	93,0	17 600	174
PQ 50/50	0,342 34	1,032 6	332	113	37 600	314
PQ 65/54	0,209 36	0,355 40	589	123	72 700	531
PQ 78/39	0,256 49	0,577 90	444	114	50 500	386
PQ 107/87	0,14135	0,098 530	1 430	203	291 000	1 320

[a] See IEC 60205.

Table 4 – Effective parameter and A_{min} values for low-profile PQI-cores

Size	C_1 mm^{-1}	C_2 X 10^{-3} mm^{-3}	A_e mm^2	l_e mm	V_e mm^3	A_{min} [a] mm^2
PQI 16/7,8	0,466 78	11,185	41,7	19,5	814	37,4
PQI 20/9	0,345 95	5,238 7	66,0	22,8	1 510	59,3
PQI 26/12	0,224 03	1,814 3	123	27,7	3 420	110

[a] See IEC 60205.

Documents
Document Sharing Hub
Full document details: IEC 63093-13-2019

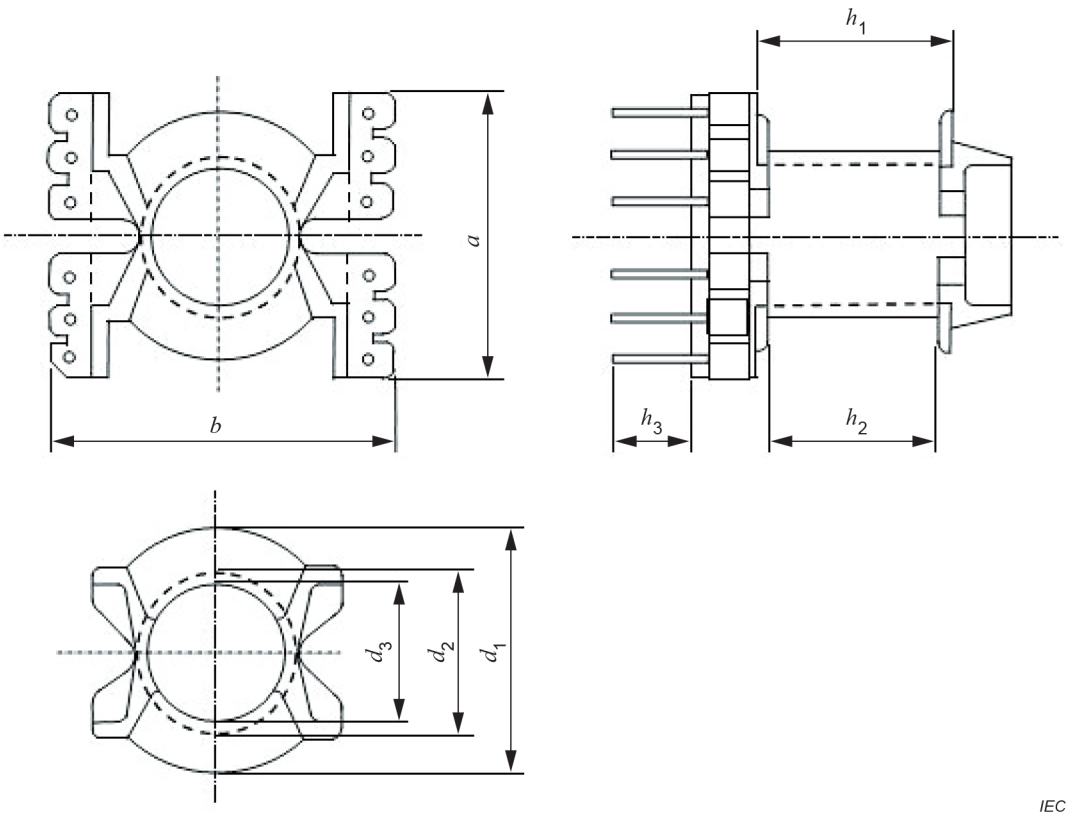

Figure 3 – Main dimensions of coil formers for PQ-cores

Table 5 – Dimensional limits for coil formers for PQ-cores

Size	d_1 mm		d_2 mm		d_3 mm		h_1 mm		h_2 mm		a mm	b mm	h_3 mm
	Min.	Max.	Min.	Max.	Min.	Max.	Min.	Max.	Min.	Max.	Max.	Max.	Min.
PQ16/11,6	13,55	13,95	8,87	9,07	7,07	7,27	6,00	6,35	4,95	5,60	19,15	20,45	6,1
PQ 20/16	17,05	17,45	10,85	11,05	9,05	9,25	9,60	9,95	8,55	9,20	23,35	23,35	6,1
PQ 20/20	17,05	17,45	10,85	11,05	9,05	9,25	13,60	13,95	12,55	13,20	23,35	23,35	6,1
PQ 26/20	21,35	21,85	14,15	14,45	12,25	12,55	10,80	11,15	9,75	10,40	26,95	29,65	6,1
PQ 26/25	21,35	21,85	14,15	14,45	12,25	12,55	15,40	15,75	14,35	15,00	26,95	29,65	6,1
PQ 32/20	26,35	26,85	15,85	16,15	13,85	14,15	10,80	11,15	9,65	10,30	32,35	34,35	6,6
PQ 32/30	26,35	26,85	15,85	16,15	13,85	14,15	20,35	20,95	19,20	20,10	32,35	34,35	6,6
PQ 35/35	30,85	31,35	16,65	17,05	14,75	15,05	24,05	24,60	22,90	23,95	35,55	39,45	7,1
PQ 40/40	35,75	36,25	17,35	17,65	15,45	15,75	28,55	29,05	27,40	28,20	41,30	42,45	6,1
PQ 50/50	42,65	43,15	22,95	23,45	20,55	21,05	34,75	35,25	33,50	34,30	51,00	51,25	9,6
PQ 65/54	51,35	51,85	29,05	29,55	26,65	27,15	34,45	34,95	33,20	34,00			
PQ 78/39	68,45	68,95	28,60	29,10	26,20	26,70	24,15	24,65	22,90	23,70			
PQ107/87	93,05	93,55	44,40	44,90	42,00	42,50	53,95	54,45	52,70	53,50			

Documents
Document Sharing Hub
Full document details: IEC 63093-13-2019

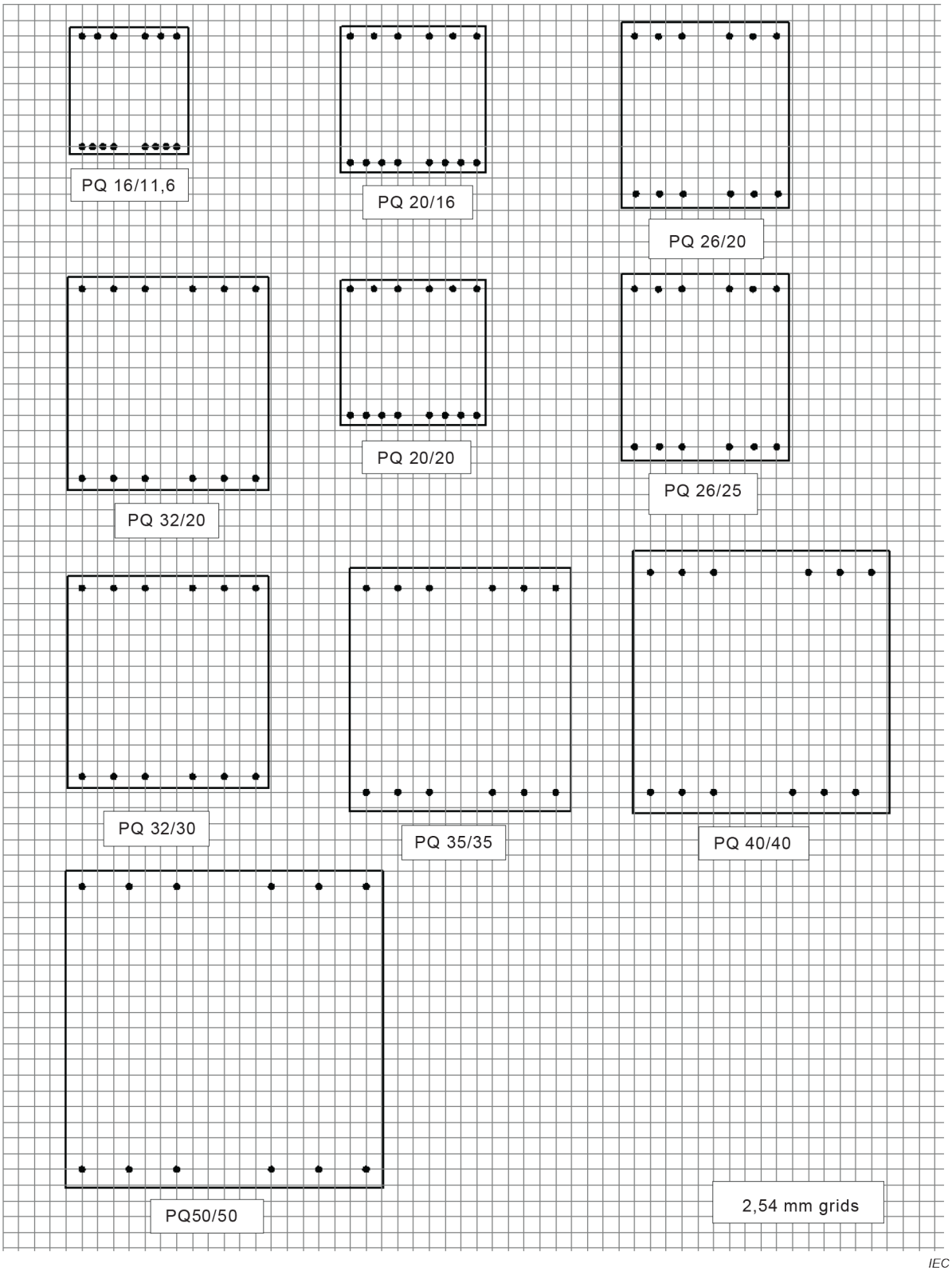

Figure 4 – Pin locations and base outlines viewed from the upper side of the board

5 Mounting

Due to their sizes and respective weights, it is recommended that the cores above PQ 35/35 (including PQ 35/35) be fixed on the printed board with mounting assemblies at two opposite sides of their coil formers.

AVA Documents
Document Sharing Hub

Concerning low-profile PQI-cores, no mounting assemblies are defined. It is recommended that the two cores be fixed by glue or adhesive tape.

6 Definitions and limits of surface irregularities

6.1 General

Surface irregularities are defined in IEC 60424-1.

6.2 Examples of surface irregularities

Figure 5 shows different examples of surface irregularities on a PQ-core.

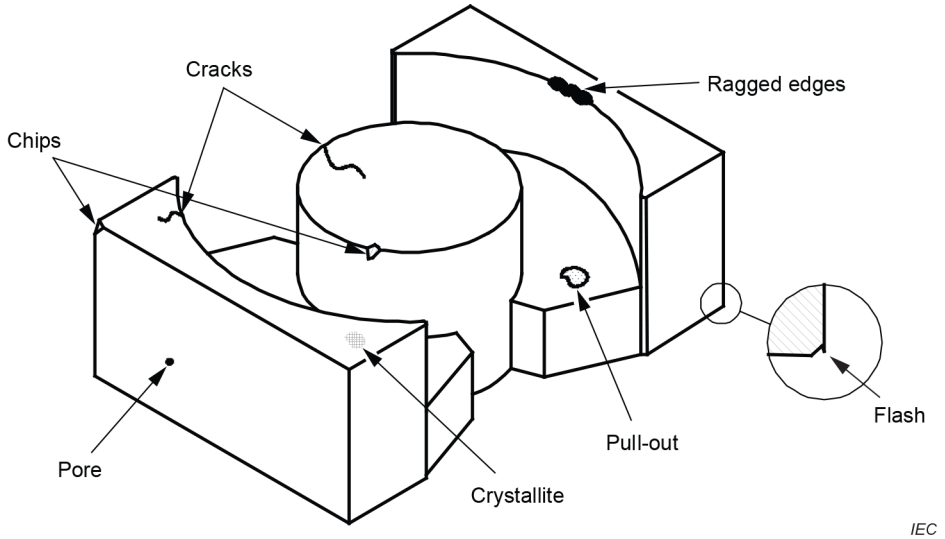

Figure 5 – Examples of surface irregularities

6.3 Chips and ragged edges

6.3.1 General

The minimum chipping area is taken as 0,5 mm^2, to be distinguishable to the naked eye.

The maximum chipping area is taken as 50 mm^2, to be referenced to the design for the cores.

6.3.2 Chips and ragged edges located on the mating surface

The areas of the chips located on the mating surface (see C1 and C1' irregularities in Figure 6) shall not exceed the following limits:

– the cumulative area of the chips located on the mating surface shall be less than 4 % of the total mating surface;
– the cumulative area of the chips located on the centre pole mating surface shall be less than 2 % of the total mating surface;
– the cumulative area of the chips located on the mating surface of one outer leg shall be less than 1 % of the total mating surface.

The total length of the ragged edges shall be less than 25 % of the perimeter of the relevant mating surface.

Documents
Document Sharing Hub
Full document details: IEC 63093-13-2019