IEC 63093-2

Edition 1.0 2020-03

INTERNATIONAL STANDARD

NORME INTERNATIONALE

Ferrite cores – Guidelines on dimensions and the limits of surface irregularities –
Part 2: Pot-cores for use in telecommunications, power supply, and filter applications

Noyaux ferrites – Lignes directrices relatives aux dimensions et limites des irrégularités de surface –
Partie 2: Circuits magnétiques en pots utilisés dans des applications de télécommunications, d'alimentation électrique et de filtre

IEC 63093-2:2020-03(en-fr)

Documents
Document Sharing Hub

Full document details: IEC 63093-2-2020

THIS PUBLICATION IS COPYRIGHT PROTECTED
Copyright © 2020 IEC, Geneva, Switzerland

All rights reserved. Unless otherwise specified, no part of this publication may be reproduced or utilized in any form or by any means, electronic or mechanical, including photocopying and microfilm, without permission in writing from either IEC or IEC's member National Committee in the country of the requester. If you have any questions about IEC copyright or have an enquiry about obtaining additional rights to this publication, please contact the address below or your local IEC member National Committee for further information.

Droits de reproduction réservés. Sauf indication contraire, aucune partie de cette publication ne peut être reproduite ni utilisée sous quelque forme que ce soit et par aucun procédé, électronique ou mécanique, y compris la photocopie et les microfilms, sans l'accord écrit de l'IEC ou du Comité national de l'IEC du pays du demandeur. Si vous avez des questions sur le copyright de l'IEC ou si vous désirez obtenir des droits supplémentaires sur cette publication, utilisez les coordonnées ci-après ou contactez le Comité national de l'IEC de votre pays de résidence.

IEC Central Office
3, rue de Varembé
CH-1211 Geneva 20
Switzerland

Tel.: +41 22 919 02 11
info@iec.ch
www.iec.ch

About the IEC
The International Electrotechnical Commission (IEC) is the leading global organization that prepares and publishes International Standards for all electrical, electronic and related technologies.

About IEC publications
The technical content of IEC publications is kept under constant review by the IEC. Please make sure that you have the latest edition, a corrigendum or an amendment might have been published.

IEC publications search - webstore.iec.ch/advsearchform
The advanced search enables to find IEC publications by a variety of criteria (reference number, text, technical committee,…). It also gives information on projects, replaced and withdrawn publications.

IEC Just Published - webstore.iec.ch/justpublished
Stay up to date on all new IEC publications. Just Published details all new publications released. Available online and once a month by email.

IEC Customer Service Centre - webstore.iec.ch/csc
If you wish to give us your feedback on this publication or need further assistance, please contact the Customer Service Centre: sales@iec.ch.

Electropedia - www.electropedia.org
The world's leading online dictionary on electrotechnology, containing more than 22 000 terminological entries in English and French, with equivalent terms in 16 additional languages. Also known as the International Electrotechnical Vocabulary (IEV) online.

IEC Glossary - std.iec.ch/glossary
67 000 electrotechnical terminology entries in English and French extracted from the Terms and Definitions clause of IEC publications issued since 2002. Some entries have been collected from earlier publications of IEC TC 37, 77, 86 and CISPR.

A propos de l'IEC
La Commission Electrotechnique Internationale (IEC) est la première organisation mondiale qui élabore et publie des Normes internationales pour tout ce qui a trait à l'électricité, à l'électronique et aux technologies apparentées.

A propos des publications IEC
Le contenu technique des publications IEC est constamment revu. Veuillez vous assurer que vous possédez l'édition la plus récente, un corrigendum ou amendement peut avoir été publié.

Recherche de publications IEC - webstore.iec.ch/advsearchform
La recherche avancée permet de trouver des publications IEC en utilisant différents critères (numéro de référence, texte, comité d'études,…). Elle donne aussi des informations sur les projets et les publications remplacées ou retirées.

IEC Just Published - webstore.iec.ch/justpublished
Restez informé sur les nouvelles publications IEC. Just Published détaille les nouvelles publications parues. Disponible en ligne et une fois par mois par email.

Service Clients - webstore.iec.ch/csc
Si vous désirez nous donner des commentaires sur cette publication ou si vous avez des questions contactez-nous: sales@iec.ch.

Electropedia - www.electropedia.org
Le premier dictionnaire d'électrotechnologie en ligne au monde, avec plus de 22 000 articles terminologiques en anglais et en français, ainsi que les termes équivalents dans 16 langues additionnelles. Egalement appelé Vocabulaire Electrotechnique International (IEV) en ligne.

Glossaire IEC - std.iec.ch/glossary
67 000 entrées terminologiques électrotechniques, en anglais et en français, extraites des articles Termes et Définitions des publications IEC parues depuis 2002. Plus certaines entrées antérieures extraites des publications des CE 37, 77, 86 et CISPR de l'IEC.

Documents
Document Sharing Hub

Full document details: IEC 63093-2-2020

IEC 63093-2

Edition 1.0 2020-03

INTERNATIONAL STANDARD

NORME INTERNATIONALE

Ferrite cores – Guidelines on dimensions and the limits of surface irregularities –
Part 2: Pot-cores for use in telecommunications, power supply, and filter applications

Noyaux ferrites – Lignes directrices relatives aux dimensions et limites des irrégularités de surface –
Partie 2: Circuits magnétiques en pots utilisés dans des applications de télécommunications, d'alimentation électrique et de filtre

INTERNATIONAL
ELECTROTECHNICAL
COMMISSION

COMMISSION
ELECTROTECHNIQUE
INTERNATIONALE

ICS 29.100.10

ISBN 978-2-8322-8008-9

Warning! Make sure that you obtained this publication from an authorized distributor.
Attention! Veuillez vous assurer que vous avez obtenu cette publication via un distributeur agréé.

® Registered trademark of the International Electrotechnical Commission
Marque déposée de la Commission Electrotechnique Internationale

AVA Documents
Document Sharing Hub

Full document details: IEC 63093-2-2020

CONTENTS

FOREWORD 4
1 Scope 6
2 Normative references 6
3 Terms and definitions 6
4 Primary dimensions 7
4.1 Dimensions of pot-cores 7
4.1.1 General 7
4.1.2 Principal dimensions 7
4.1.3 Wire-ways 9
4.1.4 Effective parameter values 9
4.2 Main dimensions for coil formers 10
5 Limits of surface irregularities 11
5.1 General 11
5.2 Examples of surface irregularities 11
5.3 Chips and ragged edges 12
5.3.1 General 12
5.3.2 Chips and ragged edges on the mating surfaces 12
5.3.3 Chips and ragged edges on the other surfaces 12
5.4 Cracks 15
5.5 Pull-out, crystallite and pore locations 16
5.6 Flash 16
Annex A (informative) Pot-core design 18
Annex B (informative) Example of gauges to check the dimensions of pot-cores 19
B.1 General 19
B.2 Procedure and requirements 20
Bibliography 21

Figure 1 – Principal dimensions of pot-cores without back wall slots 8
Figure 2 – Principal dimensions of pot-cores with back wall slots 8
Figure 3 – Main dimensions of coil formers for pot-cores 11
Figure 4 – Examples of surface irregularities 12
Figure 5 – Chips location for pot-cores 13
Figure 6 – Cracks location – Top view 15
Figure 7 – Cracks location – Bottom view 15
Figure 8 – Pull-out, crystallite and pore locations 16
Figure 9 – Flash location 17
Figure B.1 – Dimensions of gauge A 19
Figure B.2 – Dimensions of gauges B and C 20

Table 1 – Principal dimensions of pot-cores 7
Table 2 – Limits for dimensions C and G 9
Table 3 – Minimum wire-way depth 9
Table 4 – Effective parameter values for pot-cores with a centre hole 10
Table 5 – Effective parameter values for pot-cores without a centre hole 10

AVA Documents
Document Sharing Hub

Full document details: IEC 63093-2-2020

Table 6 – Main dimensions of coil formers for pot-cores 11
Table 7 – Area and length references of irregularities for visual inspection 14
Table 8 – Limits for cracks 16
Table A.1 – Ratio of diameter to height 18
Table B.1 – Dimensions of gauge A 19
Table B.2 – Dimensions of gauges B and C 20

Documents
Document Sharing Hub

Full document details: IEC 63093-2-2020

INTERNATIONAL ELECTROTECHNICAL COMMISSION

FERRITE CORES – GUIDELINES ON DIMENSIONS AND THE LIMITS OF SURFACE IRREGULARITIES –

Part 2: Pot-cores for use in telecommunications, power supply, and filter applications

FOREWORD

1) The International Electrotechnical Commission (IEC) is a worldwide organization for standardization comprising all national electrotechnical committees (IEC National Committees). The object of IEC is to promote international co-operation on all questions concerning standardization in the electrical and electronic fields. To this end and in addition to other activities, IEC publishes International Standards, Technical Specifications, Technical Reports, Publicly Available Specifications (PAS) and Guides (hereafter referred to as "IEC Publication(s)"). Their preparation is entrusted to technical committees; any IEC National Committee interested in the subject dealt with may participate in this preparatory work. International, governmental and non-governmental organizations liaising with the IEC also participate in this preparation. IEC collaborates closely with the International Organization for Standardization (ISO) in accordance with conditions determined by agreement between the two organizations.
2) The formal decisions or agreements of IEC on technical matters express, as nearly as possible, an international consensus of opinion on the relevant subjects since each technical committee has representation from all interested IEC National Committees.
3) IEC Publications have the form of recommendations for international use and are accepted by IEC National Committees in that sense. While all reasonable efforts are made to ensure that the technical content of IEC Publications is accurate, IEC cannot be held responsible for the way in which they are used or for any misinterpretation by any end user.
4) In order to promote international uniformity, IEC National Committees undertake to apply IEC Publications transparently to the maximum extent possible in their national and regional publications. Any divergence between any IEC Publication and the corresponding national or regional publication shall be clearly indicated in the latter.
5) IEC itself does not provide any attestation of conformity. Independent certification bodies provide conformity assessment services and, in some areas, access to IEC marks of conformity. IEC is not responsible for any services carried out by independent certification bodies.
6) All users should ensure that they have the latest edition of this publication.
7) No liability shall attach to IEC or its directors, employees, servants or agents including individual experts and members of its technical committees and IEC National Committees for any personal injury, property damage or other damage of any nature whatsoever, whether direct or indirect, or for costs (including legal fees) and expenses arising out of the publication, use of, or reliance upon, this IEC Publication or any other IEC Publications.
8) Attention is drawn to the Normative references cited in this publication. Use of the referenced publications is indispensable for the correct application of this publication.
9) Attention is drawn to the possibility that some of the elements of this IEC Publication may be the subject of patent rights. IEC shall not be held responsible for identifying any or all such patent rights.

International Standard IEC 63093-2 has been prepared by technical committee 51: Magnetic components, ferrite and magnetic powder materials.

This first edition cancels and replaces the first edition of IEC 62317-2 published in 2010. This edition constitutes a technical revision.

This edition includes the following significant technical changes with respect to the previous edition of IEC 62317-2:

a) addition of the limits of surface irregularities;
b) Table 4 and Table 5 are updated in accordance with IEC 60205:2016.

Documents
Document Sharing Hub

Full document details: IEC 63093-2-2020

The text of this International Standard is based on the following documents:

CDV	Report on voting
51/1299/CDV	51/1322/RVC

Full information on the voting for the approval of this International Standard can be found in the report on voting indicated in the above table.

This document has been drafted in accordance with the ISO/IEC Directives, Part 2.

A list of all parts of the IEC 63093 series, published under the general title *Ferrite cores – Guidelines on dimensions and the limits of surface irregularities*, can be found on the IEC website.

The committee has decided that the contents of this document will remain unchanged until the stability date indicated on the IEC website under "http://webstore.iec.ch" in the data related to the specific document. At this date, the document will be

- reconfirmed,
- withdrawn,
- replaced by a revised edition, or
- amended.

Documents
Document Sharing Hub

Full document details: IEC 63093-2-2020

FERRITE CORES – GUIDELINES ON DIMENSIONS AND THE LIMITS OF SURFACE IRREGULARITIES –

Part 2: Pot-cores for use in telecommunications, power supply, and filter applications

1 Scope

This part of IEC 63093 specifies the dimensions that are of importance for mechanical interchangeability for a preferred range of pot-cores made of ferrite, and the dimensional limits for coil formers to be used with them, as well as the effective parameter values to be used in calculations involving them. It also gives guidelines on the allowable limits of surface irregularities applicable to pot-cores in accordance with the relevant generic specification.

The selection of core sizes and shapes for this document is based on the philosophy of including those sizes which are industrial standards, either by inclusion in a national standard, or by broad-based use in industry. See IEC 62317-1 for more detail concerning the philosophy of selecting core sizes to be included.

The general considerations upon which the design of this range of cores is based are given in Annex A.

2 Normative references

The following documents are referred to in the text in such a way that some or all of their content constitutes requirements of this document. For dated references, only the edition cited applies. For undated references, the latest edition of the referenced document (including any amendments) applies.

IEC 60205, *Calculation of the effective parameters of magnetic piece parts*

IEC 60401-1, *Terms and nomenclature for cores made of magnetically soft ferrites – Part 1: Terms used for physical irregularities*

IEC 60424-1, *Ferrite cores – Guidelines on the limits of surface irregularities – Part 1: General specification*

3 Terms and definitions

For the purposes of this document, the terms and definitions given in IEC 60401-1 and IEC 60424-1 apply.

ISO and IEC maintain terminological databases for use in standardization at the following addresses:

- IEC Electropedia: available at http://www.electropedia.org/
- ISO Online browsing platform: available at http://www.iso.org/obp

Documents
Document Sharing Hub

Full document details: IEC 63093-2-2020

4 Primary dimensions

4.1 Dimensions of pot-cores

4.1.1 General

Compliance with the following requirements ensures mechanical interchangeability of complete assemblies and wound coil formers.

4.1.2 Principal dimensions

The principal dimensions of pot-cores shall be as given in Table 1, Figure 1 and Figure 2. The dimensions of the cores may be checked by means of gauges. By way of example, a possible standard for these gauges is given in Annex B. In order to facilitate production it can be necessary to use gauges having dimensions differing from those given in Annex B, although no relaxation of the requirements for the dimensions of the cores given in Table 1 and in Table 2 is permitted.

Table 1 – Principal dimensions of pot-cores

Dimensions in millimetres

Size	*A*		*E*		*F*		*H*		2*B*		2*D*		r_1[a]	Figure
	Min.	Max.	Min.	Max.	Min.	Max.	Min.	Max.	Min.	Max.	Min.	Max.	Max.	
P3,3/2,6	3,18	3,30[b]	2,50	2,60[b]	1,30	1,40	–	–	2,50	2,60	1,70	1,90	0,20	1
P4,6/3,1	4,40	4,60	3,50	3,65[b]	1,90[b]	2,00	–	–	3,00	3,10	2,10	2,30	0,20	1
P5,8/3,3	5,65[b]	5,80[b]	4,50	4,60[b]	2,40[b]	2,50	0,95	1,05	3,20	3,30	2,20	2,40	0,20	1
P7,4/4,0	7,15[b]	7,35	5,80	5,95[b]	2,95[b]	3,00	1,05	1,15	4,10	4,20	2,80	3,00	0,20	1
P9/5	9,00[b]	9,30[b]	7,50	7,75[b]	3,70[b]	3,90	2,00	2,20	5,10	5,40	3,60	3,90	0,25	2
P11/7	10,9	11,3	9,00	9,40	4,50[b]	4,70	2,00	2,20	6,30	6,60	4,40	4,70	0,25	2
P14/8	13,8	14,3	11,6	12,0	5,80[b]	6,00	3,00	3,20	8,20	8,50	5,60	6,00	0,25	2
P18/11	17,6	18,4	14,9	15,4	7,30	7,60	3,00	3,20	10,4	10,7	7,20	7,60	0,25	2
P22/13	21,2	22,0	17,9	18,5	9,10	9,40	4,40	4,70	13,2	13,6	9,20	9,60	0,35	2
P26/16	25,0	26,0	21,2	22,0	11,1[b]	11,5	5,40	5,70	15,9	16,3	11,0	11,4	0,35	2
P30/19	29,5	30,5	25,0	25,8	13,1[b]	13,5	5,40	5,70	18,6	19,0	13,0	13,4	0,35	2
P36/22	35,0	36,2	29,9	30,9	15,6	16,2	5,40	5,70	21,4	22,0	14,6	15,0	0,35	2

NOTE P3,3/2,6 and P4,6/3,1 cores are without the centre hole shown in Figure 1.

[a] Sharp inner corners of pot-cores are preferable but in practice some rounding can occur, provided that radius r_1 is not exceeded.

[b] The specified dimensional tolerances do not comply with IEC TR 63090.

AVA Documents Document Sharing Hub

Full document details: IEC 63093-2-2020

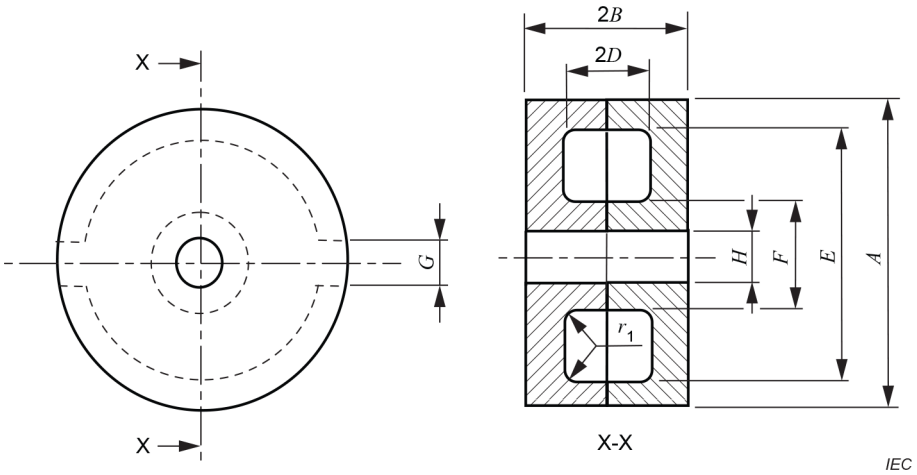

Figure 1 – Principal dimensions of pot-cores without back wall slots

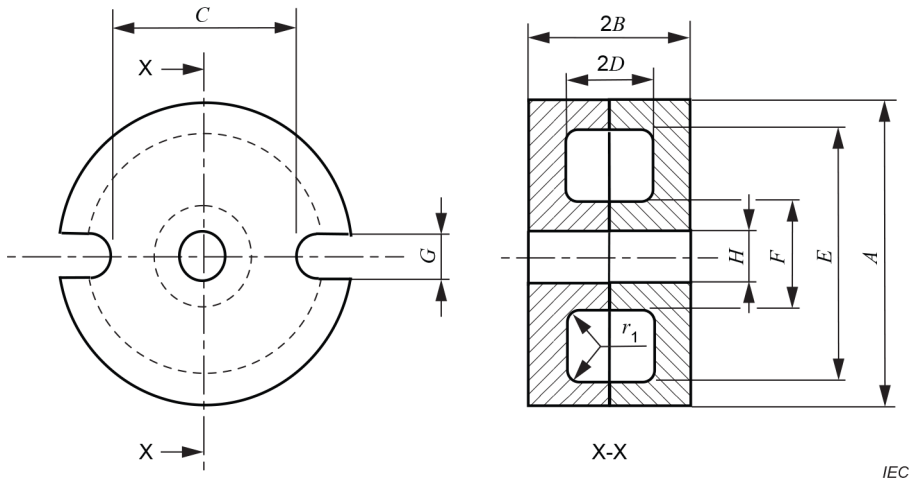

Figure 2 – Principal dimensions of pot-cores with back wall slots

Documents
Document Sharing Hub
Full document details: IEC 63093-2-2020

Table 2 – Limits for dimensions C and G

Dimensions in millimetres

Size	Wire slot dimensions			
	C[a]		G[a]	
	Min.	Max.	Min.	Max.
P3,3/2,6	–	–	0,8	1,3
P4,6/3,1	–	–	1,1	1,7
P5,8/3,3	–	–	1,4	2,0
P7,4/4,0	–	–	1,6	2,2
P9/5	6,0	7,5	1,6	2,4
P11/7	6,5	8,0	1,8	2,6
P14/8	8,7	10,0	2,3	4,1
P18/11	11,3	14,0	2,7	4,4
P22/13	13,3	16,5	3,0	4,4
P26/16	17,0	20,0	3,0	4,4
P30/19	20,0	23,0	3,5	5,3
P36/22	24,0	27,2	4,0	5,6

NOTE The shape of the slots is not defined, but the width G is indicated in the table.

[a] It is recommended that any tightening of the tolerance on dimensions C should be towards the minimum value and on dimension G towards the maximum value.

4.1.3 Wire-ways

Wire-ways are recesses in the floor of the pot-core, corresponding to the back wall slots, which allow a path for wire leads from the centre of the coil to the outside. When wire-ways are provided, their minimum depth shall be as given in Table 3.

Table 3 – Minimum wire-way depth

Dimensions in millimetres

Size	Wire-way depth
P14/8	0,2
P18/11	0,3
P22/13	0,4
P26/16	0,5
P30/19	0,6
P36/22	0,6

4.1.4 Effective parameter values

The effective parameter values for pot-cores whose dimensions comply with 4.1.2 shall be as given in Table 4 and Table 5. For the definitions of these parameters and their calculation, reference shall be made to IEC 60205.

Documents
Document Sharing Hub
Full document details: IEC 63093-2-2020

Table 4 – Effective parameter values for pot-cores with a centre hole

Size	C_1 mm^{-1}	C_2 10^{-3} mm^{-3}	A_e mm^2	l_e mm	V_e mm^3	A_{min} mm^2
P5,8/3,3	1,632 6	345,47	4,73	7,72	36,5	3,66
P7,4/4,0	1,358 8	186,79	7,27	9,88	71,9	5,79
P9/5	1,215 5	119,54	10,2	12,4	126	7,88
P11/7	0,942 72	57,419	16,4	15,5	254	13,2
P14/8	0,766 82	29,977	25,6	19,6	502	19,8
P18/11	0,579 32	13,023	44,5	25,8	1 150	36,0
P22/13	0,484 67	7,494 0	64,7	31,3	2 030	50,9
P26/16	0,391 93	4,093 8	95,7	37,5	3 590	76,1
P30/19	0,325 76	2,355 4	138	45,1	6 230	115
P36/22	0,258 42	1,261 6	205	52,9	10 800	173
NOTE The effective parameter values of P9/5 to P36/22 are calculated as pot-cores with back wall slots.						

Table 5 – Effective parameter values for pot-cores without a centre hole

Size	C_1 mm^{-1}	C_2 10^{-3} mm^{-3}	A_e mm^2	l_e mm	V_e mm^3	A_{min} mm^2
P3,3/2,6	3,136 7	1 768,4	1,77	5,56	9,87	1,43
P4,6/3,1	2,088 7	609,06	3,43	7,16	24,6	2,60
P5,8/3,3	1,540 6	295,89	5,21	8,02	41,8	3,66
P7,4/4,0	1,294 1	163,38	7,92	10,3	81,2	5,79
P9/5	1,076 2	86,063	12,5	13,5	168	10,1
P11/7	0,874 18	46,857	18,7	16,3	304	15,2
P14/8	0,689 39	22,460	30,7	21,2	650	25,5
P18/11	0,545 61	11,083	49,2	26,9	1 320	40,2
P22/13	0,442 00	5,849 0	75,6	33,4	2 520	62,7
P26/16	0,358 04	3,220 0	111	39,8	4 430	93,6
P30/19	0,306 76	2,012 0	152	46,8	7 130	128
P36/22	0,248 69	1,140 9	218	54,2	11 800	185
NOTE The effective parameter values of P9/5 to P36/22 are calculated as pot-cores with back wall slots.						

4.2 Main dimensions for coil formers

The main dimensions for coil formers shall be in accordance with Figure 3 and Table 6.

NOTE The dimensions of Table 6 which correspond to similar dimensions in Table 1 are labelled with the same letter in upper case, for example, $2d$ corresponds to $2D$ in Table 1.

Documents
Document Sharing Hub
Full document details: IEC 63093-2-2020

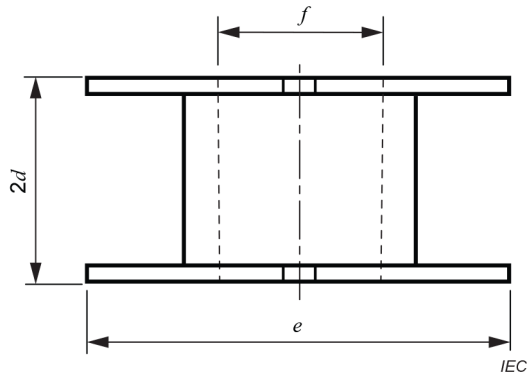

Figure 3 – Main dimensions of coil formers for pot-cores

Table 6 – Main dimensions of coil formers for pot-cores

Dimensions in millimetres

Size	Main dimensions of coil formers		
	e Max.	*f* Min.	2*d* Max.
P3,3/2,6	2,40	1,50	1,60
P4,6/3,1	3,40	2,10	2,00
P5,8/3,3	4,40	2,60	2,10
P7,4/4,0	5,70	3,10	2,70
P9/5	7,40	4,00	3,50
P11/7	8,90	4,80	4,30
P14/8	11,5	6,10	5,50
P18/11	14,8	7,70	7,10
P22/13	17,8	9,50	9,10
P26/16	21,1	11,6	10,9
P30/19	24,9	13,6	12,9
P36/22	29,8	16,3	14,5

5 Limits of surface irregularities

5.1 General

Surface irregularities are defined in IEC 60424-1.

5.2 Examples of surface irregularities

Figure 4 shows different examples of surface irregularities on a pot-core.

Documents
Document Sharing Hub
Full document details: IEC 63093-2-2020

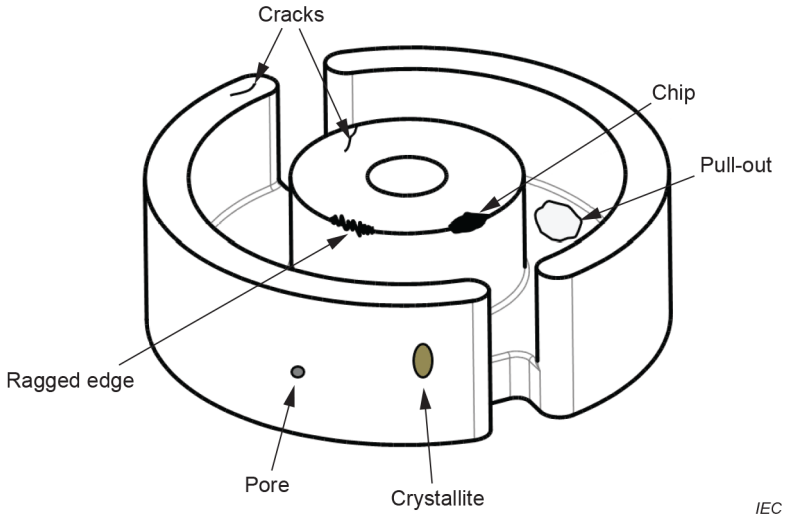

Figure 4 – Examples of surface irregularities

5.3 Chips and ragged edges

5.3.1 General

The minimum area is taken as 0,5 mm^2, to be distinguishable to the naked eye.

5.3.2 Chips and ragged edges on the mating surfaces

The areas of the chips located on the mating surfaces (Chip 1 and Chip 1' irregularities in Figure 5) shall not exceed the following limits:

– the cumulative area of the chips shall be less than 4 % of the total mating surface (whether gapped or ungapped);
– the total length of the ragged edges shall be less than 25 % of the perimeter of the relevant mating surface.

5.3.3 Chips and ragged edges on the other surfaces

The allowable areas of chips on the other surfaces are doubled as compared to the limits for the mating surface (see Figure 5, Chip 1”).

The rule for ragged edges is the same as that for the mating surface.

Chips and ragged edges are not acceptable on the inner edges of the wire slot area.

Documents
Document Sharing Hub
Full document details: IEC 63093-2-2020