IEC 63093-3

Edition 1.0 2020-03

INTERNATIONAL STANDARD

NORME INTERNATIONALE

Ferrite cores – Guidelines on dimensions and the limits of surface irregularities –
Part 3: Half pot-cores made of ferrite for inductive proximity switches

Noyaux ferrites – Lignes directrices relatives aux dimensions et limites des irrégularités de surface –
Partie 3: Demi-circuits magnétiques en pots en ferrite pour des commutateurs inductifs de proximité

IEC 63093-3 :2020-03(en-fr)

Documents
Document Sharing Hub

Full document details: IEC 63093-3-2020

THIS PUBLICATION IS COPYRIGHT PROTECTED
Copyright © 2020 IEC, Geneva, Switzerland

All rights reserved. Unless otherwise specified, no part of this publication may be reproduced or utilized in any form or by any means, electronic or mechanical, including photocopying and microfilm, without permission in writing from either IEC or IEC's member National Committee in the country of the requester. If you have any questions about IEC copyright or have an enquiry about obtaining additional rights to this publication, please contact the address below or your local IEC member National Committee for further information.

Droits de reproduction réservés. Sauf indication contraire, aucune partie de cette publication ne peut être reproduite ni utilisée sous quelque forme que ce soit et par aucun procédé, électronique ou mécanique, y compris la photocopie et les microfilms, sans l'accord écrit de l'IEC ou du Comité national de l'IEC du pays du demandeur. Si vous avez des questions sur le copyright de l'IEC ou si vous désirez obtenir des droits supplémentaires sur cette publication, utilisez les coordonnées ci-après ou contactez le Comité national de l'IEC de votre pays de résidence.

IEC Central Office
3, rue de Varembé
CH-1211 Geneva 20
Switzerland

Tel.: +41 22 919 02 11
info@iec.ch
www.iec.ch

About the IEC
The International Electrotechnical Commission (IEC) is the leading global organization that prepares and publishes International Standards for all electrical, electronic and related technologies.

About IEC publications
The technical content of IEC publications is kept under constant review by the IEC. Please make sure that you have the latest edition, a corrigendum or an amendment might have been published.

IEC publications search - webstore.iec.ch/advsearchform
The advanced search enables to find IEC publications by a variety of criteria (reference number, text, technical committee,…). It also gives information on projects, replaced and withdrawn publications.

IEC Just Published - webstore.iec.ch/justpublished
Stay up to date on all new IEC publications. Just Published details all new publications released. Available online and once a month by email.

IEC Customer Service Centre - webstore.iec.ch/csc
If you wish to give us your feedback on this publication or need further assistance, please contact the Customer Service Centre: sales@iec.ch.

Electropedia - www.electropedia.org
The world's leading online dictionary on electrotechnology, containing more than 22 000 terminological entries in English and French, with equivalent terms in 16 additional languages. Also known as the International Electrotechnical Vocabulary (IEV) online.

IEC Glossary - std.iec.ch/glossary
67 000 electrotechnical terminology entries in English and French extracted from the Terms and Definitions clause of IEC publications issued since 2002. Some entries have been collected from earlier publications of IEC TC 37, 77, 86 and CISPR.

A propos de l'IEC
La Commission Electrotechnique Internationale (IEC) est la première organisation mondiale qui élabore et publie des Normes internationales pour tout ce qui a trait à l'électricité, à l'électronique et aux technologies apparentées.

A propos des publications IEC
Le contenu technique des publications IEC est constamment revu. Veuillez vous assurer que vous possédez l'édition la plus récente, un corrigendum ou amendement peut avoir été publié.

Recherche de publications IEC - webstore.iec.ch/advsearchform
La recherche avancée permet de trouver des publications IEC en utilisant différents critères (numéro de référence, texte, comité d'études,…). Elle donne aussi des informations sur les projets et les publications remplacées ou retirées.

IEC Just Published - webstore.iec.ch/justpublished
Restez informé sur les nouvelles publications IEC. Just Published détaille les nouvelles publications parues. Disponible en ligne et une fois par mois par email.

Service Clients - webstore.iec.ch/csc
Si vous désirez nous donner des commentaires sur cette publication ou si vous avez des questions contactez-nous: sales@iec.ch.

Electropedia - www.electropedia.org
Le premier dictionnaire d'électrotechnologie en ligne au monde, avec plus de 22 000 articles terminologiques en anglais et en français, ainsi que les termes équivalents dans 16 langues additionnelles. Egalement appelé Vocabulaire Electrotechnique International (IEV) en ligne.

Glossaire IEC - std.iec.ch/glossary
67 000 entrées terminologiques électrotechniques, en anglais et en français, extraites des articles Termes et Définitions des publications IEC parues depuis 2002. Plus certaines entrées antérieures extraites des publications des CE 37, 77, 86 et CISPR de l'IEC.

Documents
Document Sharing Hub

Full document details: IEC 63093-3-2020

IEC 63093-3

Edition 1.0 2020-03

INTERNATIONAL STANDARD

NORME INTERNATIONALE

Ferrite cores – Guidelines on dimensions and the limits of surface irregularities –
Part 3: Half pot-cores made of ferrite for inductive proximity switches

Noyaux ferrites – Lignes directrices relatives aux dimensions et limites des irrégularités de surface –
Partie 3: Demi-circuits magnétiques en pots en ferrite pour des commutateurs inductifs de proximité

INTERNATIONAL
ELECTROTECHNICAL
COMMISSION

COMMISSION
ELECTROTECHNIQUE
INTERNATIONALE

ICS 29.100.10

ISBN 978-2-8322-8009-6

Warning! Make sure that you obtained this publication from an authorized distributor.
Attention! Veuillez vous assurer que vous avez obtenu cette publication via un distributeur agréé.

® Registered trademark of the International Electrotechnical Commission
Marque déposée de la Commission Electrotechnique Internationale

Documents
Document Sharing Hub

Full document details: IEC 63093-3-2020

CONTENTS

FOREWORD 3
1 Scope 5
2 Normative references 5
3 Terms and definitions 5
4 Primary dimensions 5
4.1 General 5
4.2 Nomenclature of dimensions 6
4.3 Dimensions of PS-cores 7
4.4 Requirements 8
4.5 Marking 8
5 Limits of surface irregularities 8
5.1 General 8
5.2 Examples of surface irregularities 8
5.3 Chips and ragged edges 9
5.4 Cracks 11
5.5 Pull-out, crystallite and pore locations for PS-cores 12
5.6 Flash 12
Bibliography 14

Figure 1 – Fundamental types of PS-cores 6
Figure 2 – Nomenclature of dimensions 7
Figure 3 – Examples of surface irregularities 9
Figure 4 – Chips and ragged edge on the surfaces 9
Figure 5 – Cracks location – Top view 11
Figure 6 – Cracks location – Bottom view 11
Figure 7 – Pull-out, crystallite and pore locations 12
Figure 8 – Flash location 13
Figure 9 – Flash location in the wire hole 13

Table 1 – Dimensions of PS-cores 8
Table 2 – Area and length references of irregularities for visual inspection 10
Table 3 – Limits for cracks 12

Documents
Document Sharing Hub

Full document details: IEC 63093-3-2020

INTERNATIONAL ELECTROTECHNICAL COMMISSION

FERRITE CORES – GUIDELINES ON DIMENSIONS AND THE LIMITS OF SURFACE IRREGULARITIES –

Part 3: Half pot-cores made of ferrite for inductive proximity switches

FOREWORD

1) The International Electrotechnical Commission (IEC) is a worldwide organization for standardization comprising all national electrotechnical committees (IEC National Committees). The object of IEC is to promote international co-operation on all questions concerning standardization in the electrical and electronic fields. To this end and in addition to other activities, IEC publishes International Standards, Technical Specifications, Technical Reports, Publicly Available Specifications (PAS) and Guides (hereafter referred to as "IEC Publication(s)"). Their preparation is entrusted to technical committees; any IEC National Committee interested in the subject dealt with may participate in this preparatory work. International, governmental and non-governmental organizations liaising with the IEC also participate in this preparation. IEC collaborates closely with the International Organization for Standardization (ISO) in accordance with conditions determined by agreement between the two organizations.
2) The formal decisions or agreements of IEC on technical matters express, as nearly as possible, an international consensus of opinion on the relevant subjects since each technical committee has representation from all interested IEC National Committees.
3) IEC Publications have the form of recommendations for international use and are accepted by IEC National Committees in that sense. While all reasonable efforts are made to ensure that the technical content of IEC Publications is accurate, IEC cannot be held responsible for the way in which they are used or for any misinterpretation by any end user.
4) In order to promote international uniformity, IEC National Committees undertake to apply IEC Publications transparently to the maximum extent possible in their national and regional publications. Any divergence between any IEC Publication and the corresponding national or regional publication shall be clearly indicated in the latter.
5) IEC itself does not provide any attestation of conformity. Independent certification bodies provide conformity assessment services and, in some areas, access to IEC marks of conformity. IEC is not responsible for any services carried out by independent certification bodies.
6) All users should ensure that they have the latest edition of this publication.
7) No liability shall attach to IEC or its directors, employees, servants or agents including individual experts and members of its technical committees and IEC National Committees for any personal injury, property damage or other damage of any nature whatsoever, whether direct or indirect, or for costs (including legal fees) and expenses arising out of the publication, use of, or reliance upon, this IEC Publication or any other IEC Publications.
8) Attention is drawn to the Normative references cited in this publication. Use of the referenced publications is indispensable for the correct application of this publication.
9) Attention is drawn to the possibility that some of the elements of this IEC Publication may be the subject of patent rights. IEC shall not be held responsible for identifying any or all such patent rights.

International Standard IEC 63093-3 has been prepared by IEC technical committee 51: Magnetic components, ferrite and magnetic powder materials.

This first edition cancels and replaces the first edition of IEC 62323, published in 2005. This edition constitutes a technical revision.

This edition includes the following significant technical changes with respect to the previous edition of IEC 62323:

a) addition of the limits surface irregularities.

Documents
Document Sharing Hub

Full document details: IEC 63093-3-2020

The text of this International Standard is based on the following documents:

CDV	Report on voting
51/1300/CDV	51/1323/RVC

Full information on the voting for the approval of this International Standard can be found in the report on voting indicated in the above table.

This document has been drafted in accordance with the ISO/IEC Directives, Part 2.

A list of all parts of the IEC 63093 series, published under the general title *Ferrite cores – Guidelines on dimensions and the limits of surface irregularities*, can be found on the IEC website.

The committee has decided that the contents of this document will remain unchanged until the stability date indicated on the IEC website under "http://webstore.iec.ch" in the data related to the specific document. At this date, the document will be

- reconfirmed,
- withdrawn,
- replaced by a revised edition, or
- amended.

Documents
Document Sharing Hub

Full document details: IEC 63093-3-2020

FERRITE CORES – GUIDELINES ON DIMENSIONS AND THE LIMITS OF SURFACE IRREGULARITIES –

Part 3: Half pot-cores made of ferrite for inductive proximity switches

1 Scope

This part of IEC 63093-3 specifies the dimensions that are of importance for mechanical interchangeability for a preferred range of half pot-cores made of ferrite, intended to be used in inductive proximity switches. Half pot-cores for inductive proximity switches are also called PS-cores.

The selection of core sizes and shapes for this document is based on the philosophy of including those sizes and shapes which are industrial standards, either by inclusion in a national standard, or by broad-based use in industry.

This part of IEC 63093 can also be considered as a sectional specification useful in the negotiations between ferrite core manufacturers and customers about surface irregularities. It provides guidelines on the allowable limits of surface irregularities applicable to PS-cores in accordance with the relevant generic specification.

2 Normative references

The following documents are referred to in the text in such a way that some or all of their content constitutes requirements of this document. For dated references, only the edition cited applies. For undated references, the latest edition of the referenced document (including any amendments) applies.

IEC 60401-1, *Terms and nomenclature for cores made of magnetically soft ferrites – Part 1: Terms used for physical irregularities*

IEC 60424-1:2015, *Ferrite cores – Guidelines on the limits of surface irregularities – Part 1: General specification*

3 Terms and definitions

For the purposes of this document, the terms and definitions given in IEC 60401-1 and IEC 60424-1 apply.

ISO and IEC maintain terminological databases for use in standardization at the following addresses:

- IEC Electropedia: available at http://www.electropedia.org/
- ISO Online browsing platform: available at http://www.iso.org/obp

4 Primary dimensions

4.1 General

PS-cores are primarily suited for use in inductive proximity switches. The design of PS-cores is guided by the following considerations:

AVA Documents
Document Sharing Hub

Full document details: IEC 63093-3-2020

– the ratio of the thickness of the outer wall to the thickness of the back wall is preferably 1:1;
– the location, design and dimension of the wire-ways, holes and slots are made to easily accommodate the leading connection wires out from the interior of the core;
– the diameter of the centre pole and centre pole hole is regulated by the type of sensor application that can require a hole, a blind hole, or no hole.

Fundamental types of PS-cores are shown in Figure 1.

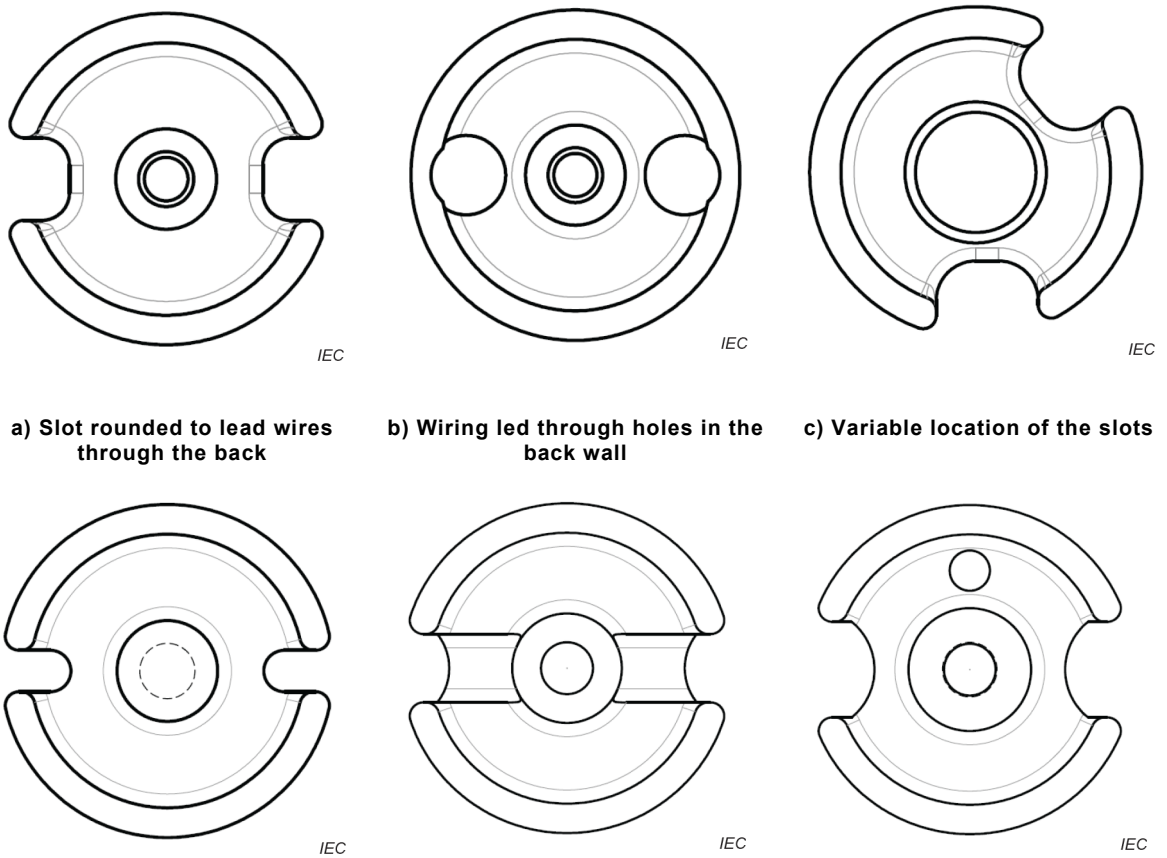

a) Slot rounded to lead wires through the back

b) Wiring led through holes in the back wall

c) Variable location of the slots

d) Centre pole with blind hole (dashed)

e) Wire-way recess on the inner bottom

f) Connecting wiring via slots and hole

Figure 1 – Fundamental types of PS-cores

The nomenclature of dimensions given in Figure 2 applies to all examples given in Figure 1.

4.2 Nomenclature of dimensions

The nomenclature of dimensions is shown in Figure 2.

Documents
Document Sharing Hub
Full document details: IEC 63093-3-2020

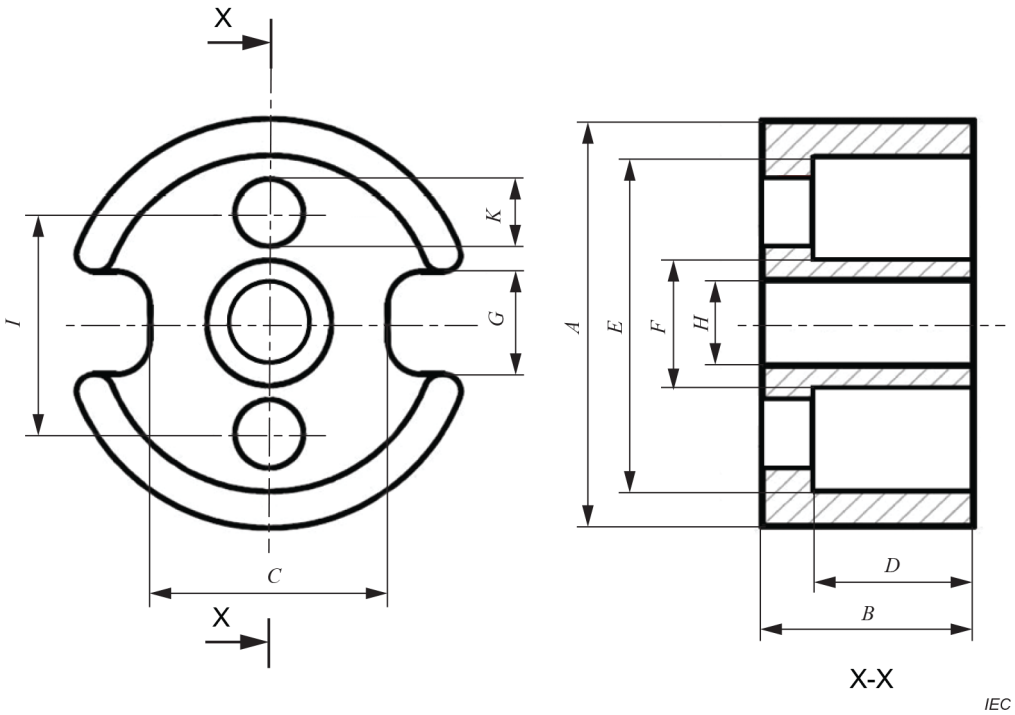

Figure 2 – Nomenclature of dimensions

4.3 Dimensions of PS-cores

Compliance with the following requirements ensures mechanical interchangeability of complete assemblies and wound coil formers. The principal dimensions and tolerances of PS-cores shall be as given in Table 1. See also Figure 2. Dimensions which are not specified in Table 1 follow the agreement between manufacturers and users.

Documents
Document Sharing Hub
Full document details: IEC 63093-3-2020

Table 1 – Dimensions of PS-cores

Core type	Dimensions	*A* mm		*B* mm		*D* mm		*E* mm		*F* mm	
		Min.	Max.	Min.	Max.	Min.	Max.	Min.	Max.	Min.	Max.
PS 2,4	2,4 x 1,25	2,35	2,50	1,05	1,25	0,85	1,05	1,85	2,05	0,70	0,80
PS 3,3	3,3 x 1,3	3,20	3,35	1,10	1,30	0,85	1,05	2,45	2,65	1,10	1,20
PS 4,6	4,6 x 2,05	4,40	4,60	1,90[a]	2,05	1,35	1,50[a]	3,70	3,90	2,05	2,20
PS 5,6	5,6 x 1,7	5,35	5,60	1,50	1,70	1,10	1,30	4,50	4,70	2,40[a]	2,50
PS 7,35	7,35 x 3,6	7,10	7,35	3,40	3,60	2,80	3,00	5,80	6,00	2,85	3,00
PS 8,2	8,25 x 3,5	7,85	8,25	3,30	3,50	2,60	2,80	6,50	6,85	2,30	2,50
PS 9,0	9,0 x 3,5	8,60	9,00	3,30	3,50	2,60	2,80[a]	7,30	7,60[a]	3,65	3,90
PS 11	11,3 x 3,3	10,90	11,30	3,20[a]	3,30[a]	2,20	2,35[a]	9,00	9,40	4,50[a]	4,70
PS 14	14,3 x 4,25	13,80	14,30	4,10[a]	4,25	2,80	3,00[a]	11,60	12,00	5,80[a]	6,00
PS 25	24,8 x 8,9	23,80	24,80	8,70[a]	8,90[a]	5,90	6,20[a]	20,50	21,30	10,80	11,30
PS 30,5	30,5 x 10,2	29,50	30,50	9,90	10,20	7,00	7,35[a]	25,00	25,80	13,10[a]	13,50
PS 35	35 x 10,8	34,00	35,00	10,45	10,80	7,20	7,60	29,40	30,20	15,20	15,70
PS 47	47 x 14	45,70	47,00	13,50	14,00	9,50	10,00	39,00	40,10	19,40	20,00
PS 68	68 x 14,5	65,80	68,00	13,90	14,50	9,00	9,60	57,50	59,30	28,50	29,50

A centre hole (H) is allowed.

Chamfers are allowed as long as they do not limit the winding space.

NOTE The core can have up to two slots in order to realize the wire connection feed-through holes.

[a] The specified dimensional tolerances do not comply with IEC TR 63090.

4.4 Requirements

In order to avoid damage to the coils and their interconnection wires, the core shall be delivered without flashes. Flashes according to 3.3 of IEC 60424-1:2015 shall not be present either on the winding area limiting surfaces, including edges, or on the wire connection feed-through holes.

4.5 Marking

A manufacturer specific marking should be clearly visible for types PS 7,35 and larger, preferably on the back wall of the core.

5 Limits of surface irregularities

5.1 General

Surface irregularities are defined in IEC 60424-1.

5.2 Examples of surface irregularities

Figure 3 shows different examples of surface irregularities on a PS-core.

Documents
Document Sharing Hub

Full document details: IEC 63093-3-2020