IEC 63129

Edition 1.0 2020-04

INTERNATIONAL STANDARD

NORME INTERNATIONALE

colour inside

Determination of inrush current characteristics of lighting products

Détermination des caractéristiques du courant d'appel des produits d'éclairage

IEC 63129 :2020-04(en-fr)

Documents
Document Sharing Hub

Full document details: IEC 63129-2020

THIS PUBLICATION IS COPYRIGHT PROTECTED
Copyright © 2020 IEC, Geneva, Switzerland

All rights reserved. Unless otherwise specified, no part of this publication may be reproduced or utilized in any form or by any means, electronic or mechanical, including photocopying and microfilm, without permission in writing from either IEC or IEC's member National Committee in the country of the requester. If you have any questions about IEC copyright or have an enquiry about obtaining additional rights to this publication, please contact the address below or your local IEC member National Committee for further information.

Droits de reproduction réservés. Sauf indication contraire, aucune partie de cette publication ne peut être reproduite ni utilisée sous quelque forme que ce soit et par aucun procédé, électronique ou mécanique, y compris la photocopie et les microfilms, sans l'accord écrit de l'IEC ou du Comité national de l'IEC du pays du demandeur. Si vous avez des questions sur le copyright de l'IEC ou si vous désirez obtenir des droits supplémentaires sur cette publication, utilisez les coordonnées ci-après ou contactez le Comité national de l'IEC de votre pays de résidence.

IEC Central Office
3, rue de Varembé
CH-1211 Geneva 20
Switzerland

Tel.: +41 22 919 02 11
info@iec.ch
www.iec.ch

About the IEC
The International Electrotechnical Commission (IEC) is the leading global organization that prepares and publishes International Standards for all electrical, electronic and related technologies.

About IEC publications
The technical content of IEC publications is kept under constant review by the IEC. Please make sure that you have the latest edition, a corrigendum or an amendment might have been published.

IEC publications search - webstore.iec.ch/advsearchform
The advanced search enables to find IEC publications by a variety of criteria (reference number, text, technical committee,…). It also gives information on projects, replaced and withdrawn publications.

IEC Just Published - webstore.iec.ch/justpublished
Stay up to date on all new IEC publications. Just Published details all new publications released. Available online and once a month by email.

IEC Customer Service Centre - webstore.iec.ch/csc
If you wish to give us your feedback on this publication or need further assistance, please contact the Customer Service Centre: sales@iec.ch.

Electropedia - www.electropedia.org
The world's leading online dictionary on electrotechnology, containing more than 22 000 terminological entries in English and French, with equivalent terms in 16 additional languages. Also known as the International Electrotechnical Vocabulary (IEV) online.

IEC Glossary - std.iec.ch/glossary
67 000 electrotechnical terminology entries in English and French extracted from the Terms and Definitions clause of IEC publications issued since 2002. Some entries have been collected from earlier publications of IEC TC 37, 77, 86 and CISPR.

A propos de l'IEC
La Commission Electrotechnique Internationale (IEC) est la première organisation mondiale qui élabore et publie des Normes internationales pour tout ce qui a trait à l'électricité, à l'électronique et aux technologies apparentées.

A propos des publications IEC
Le contenu technique des publications IEC est constamment revu. Veuillez vous assurer que vous possédez l'édition la plus récente, un corrigendum ou amendement peut avoir été publié.

Recherche de publications IEC - webstore.iec.ch/advsearchform
La recherche avancée permet de trouver des publications IEC en utilisant différents critères (numéro de référence, texte, comité d'études,…). Elle donne aussi des informations sur les projets et les publications remplacées ou retirées.

IEC Just Published - webstore.iec.ch/justpublished
Restez informé sur les nouvelles publications IEC. Just Published détaille les nouvelles publications parues. Disponible en ligne et une fois par mois par email.

Service Clients - webstore.iec.ch/csc
Si vous désirez nous donner des commentaires sur cette publication ou si vous avez des questions contactez-nous: sales@iec.ch.

Electropedia - www.electropedia.org
Le premier dictionnaire d'électrotechnologie en ligne au monde, avec plus de 22 000 articles terminologiques en anglais et en français, ainsi que les termes équivalents dans 16 langues additionnelles. Egalement appelé Vocabulaire Electrotechnique International (IEV) en ligne.

Glossaire IEC - std.iec.ch/glossary
67 000 entrées terminologiques électrotechniques, en anglais et en français, extraites des articles Termes et Définitions des publications IEC parues depuis 2002. Plus certaines entrées antérieures extraites des publications des CE 37, 77, 86 et CISPR de l'IEC.

Documents
Document Sharing Hub

Full document details: IEC 63129-2020

IEC 63129

Edition 1.0 2020-04

INTERNATIONAL STANDARD

NORME INTERNATIONALE

colour inside

Determination of inrush current characteristics of lighting products

Détermination des caractéristiques du courant d'appel des produits d'éclairage

INTERNATIONAL
ELECTROTECHNICAL
COMMISSION

COMMISSION
ELECTROTECHNIQUE
INTERNATIONALE

ICS 29.140.01; 29.140.99

ISBN 978-2-8322-8205-2

Warning! Make sure that you obtained this publication from an authorized distributor.
Attention! Veuillez vous assurer que vous avez obtenu cette publication via un distributeur agréé.

AVA Documents
Document Sharing Hub

® Registered trademark of the International Electrotechnical Commission
Marque déposée de la Commission Electrotechnique Internationale

Full document details: IEC 63129-2020

CONTENTS

FOREWORD 3
INTRODUCTION 5
1 Scope 6
2 Normative references 6
3 Terms and definitions 6
4 Symbols and abbreviated terms 8
5 General notes on measurements 8
6 Inrush current measurements 8
7 DC method (default method) 10
7.1 Measurement setup 10
7.2 Determining the value of the adjustment resistance 11
7.2.1 Determining the value of $R_{adj,1}$ 11
7.2.2 Determining the value of $R_{adj,k}$ 12
7.3 Measurement and calculation of the inrush current characteristics 13
7.3.1 Inrush current characteristics for a single DUT (k = 1) 13
7.3.2 Inrush current characteristics for multiple DUTs 14
8 Alternative AC method 14
8.1 General 14
8.2 Determining the value of the adjustment resistance 15
8.2.1 Determining the value of $R_{adj,1}$ 15
8.2.2 Determining the value of $R_{adj,k}$ 16
8.3 Measurement and calculation of the inrush current characteristics 16
8.3.1 Measuring and calculating the inrush current for a single DUT 16
8.3.2 Measuring and calculating the inrush current for multiple DUTs 16
9 Additional alternative methods 17
Annex A (informative) Application of inrush current characteristics 18
A.1 General 18
A.2 Matching of DUT inrush current characteristics with switch or MCB specifications 18
Bibliography 19

Figure 1 – Determination of the inrush current pulse durations t_{H10} and t_{H50} 9
Figure 2 – Measurement setup for the DC method (default method) 10
Figure 3 – Switching unit 11
Figure 4 – Typical current rise and voltage decrease as a function of time after loading C_1 (step c)) followed by turning on the switching unit (step e)) as described under step f) 12
Figure 5 – Determination of I_{max} (ignoring the current peaks for t < 100 µs) 14
Figure 6 – Measurement setup for the AC method (alternative method) 15
Figure 7 – Addition of m DUTs to the measurement circuit (both DC and AC methods) 17

Documents
Document Sharing Hub
Full document details: IEC 63129-2020

INTERNATIONAL ELECTROTECHNICAL COMMISSION

DETERMINATION OF INRUSH CURRENT CHARACTERISTICS OF LIGHTING PRODUCTS

FOREWORD

1) The International Electrotechnical Commission (IEC) is a worldwide organization for standardization comprising all national electrotechnical committees (IEC National Committees). The object of IEC is to promote international co-operation on all questions concerning standardization in the electrical and electronic fields. To this end and in addition to other activities, IEC publishes International Standards, Technical Specifications, Technical Reports, Publicly Available Specifications (PAS) and Guides (hereafter referred to as "IEC Publication(s)"). Their preparation is entrusted to technical committees; any IEC National Committee interested in the subject dealt with may participate in this preparatory work. International, governmental and non-governmental organizations liaising with the IEC also participate in this preparation. IEC collaborates closely with the International Organization for Standardization (ISO) in accordance with conditions determined by agreement between the two organizations.
2) The formal decisions or agreements of IEC on technical matters express, as nearly as possible, an international consensus of opinion on the relevant subjects since each technical committee has representation from all interested IEC National Committees.
3) IEC Publications have the form of recommendations for international use and are accepted by IEC National Committees in that sense. While all reasonable efforts are made to ensure that the technical content of IEC Publications is accurate, IEC cannot be held responsible for the way in which they are used or for any misinterpretation by any end user.
4) In order to promote international uniformity, IEC National Committees undertake to apply IEC Publications transparently to the maximum extent possible in their national and regional publications. Any divergence between any IEC Publication and the corresponding national or regional publication shall be clearly indicated in the latter.
5) IEC itself does not provide any attestation of conformity. Independent certification bodies provide conformity assessment services and, in some areas, access to IEC marks of conformity. IEC is not responsible for any services carried out by independent certification bodies.
6) All users should ensure that they have the latest edition of this publication.
7) No liability shall attach to IEC or its directors, employees, servants or agents including individual experts and members of its technical committees and IEC National Committees for any personal injury, property damage or other damage of any nature whatsoever, whether direct or indirect, or for costs (including legal fees) and expenses arising out of the publication, use of, or reliance upon, this IEC Publication or any other IEC Publications.
8) Attention is drawn to the Normative references cited in this publication. Use of the referenced publications is indispensable for the correct application of this publication.
9) Attention is drawn to the possibility that some of the elements of this IEC Publication may be the subject of patent rights. IEC shall not be held responsible for identifying any or all such patent rights.

International Standard IEC 63129 has been prepared by IEC technical committee 34: Lamps and related equipment.

The text of this International Standard is based on the following documents:

CDV	Report on voting
34/636/CDV	34/679/RVC

Full information on the voting for the approval of this International Standard can be found in the report on voting indicated in the above table.

This document has been drafted in accordance with the ISO/IEC Directives, Part 2.

Documents
Document Sharing Hub

Full document details: IEC 63129-2020

The committee has decided that the contents of this document will remain unchanged until the stability date indicated on the IEC website under "http://webstore.iec.ch" in the data related to the specific document. At this date, the document will be

- reconfirmed,
- withdrawn,
- replaced by a revised edition, or
- amended.

IMPORTANT – The 'colour inside' logo on the cover page of this publication indicates that it contains colours which are considered to be useful for the correct understanding of its contents. Users should therefore print this document using a colour printer.

Documents
Document Sharing Hub

Full document details: IEC 63129-2020

INTRODUCTION

Inrush current is the transient current drawn by an electrical device after it is switched on via an independent mains switch, the maximum amplitude of which is often much higher than in steady state during normal operation. Inrush current occurs because of charging capacitances during power up of a device.

Quantities such as peak inrush current and inrush current pulse duration are key parameters to characterize the inrush current, which are important to consider when selecting the switchgear of a lighting installation. This information is indispensable for electric installation planners, lighting designers and installers to be able to guarantee compatibility of a lighting system with other installation components like switches and overcurrent protection devices.

Careful selection of overcurrent protection devices, like circuit breakers, is important when dealing with high inrush currents. The overcurrent protection should react quickly to overload or short circuit but should not interrupt the circuit when an inrush current flows (i.e. false tripping). Another unwanted adverse effect that could occur when inrush current is not considered is welding of contacts of mechanical or electromechanical switches (manual or automatic).

The aim of this document is to determine the peak inrush current and the inrush current pulse duration of one or multiple lighting products of the same type.

This can serve as valuable information for installers in making the correct selection of components like switches and overcurrent protection devices in an installation or conversely for determination of the maximum number of lighting products of the same type that can be applied in an installation with switches and overcurrent protection devices (see Annex A).

The resulting functional compatibility between switchgear and lighting products in an installation is the main rationale for this document.

The rated voltage of lighting products which can be tested with this document is limited to 230 V AC only. Future inclusion of other voltages (for example 100 V AC, 120 V AC, 200 V AC, 277 V AC, 347 V AC) is not excluded.

Documents
Document Sharing Hub

Full document details: IEC 63129-2020

DETERMINATION OF INRUSH CURRENT CHARACTERISTICS OF LIGHTING PRODUCTS

1 Scope

This document describes a method, based on measurements combined with calculations, to determine specific characteristics of the inrush current of single and/or multiple lighting products of the same type. Lighting products include the following:

- light sources with integrated controlgear,
- controlgear,
- luminaires.

The inrush current characteristics that are determined are

- the peak inrush current,
- the inrush current pulse duration.

This document applies to lighting products connected to low-voltage 230 V AC 50/60 Hz electrical supply networks.

NOTE In Clause 6 it is stated that the methodology applies reference values for the reference (line) inductance and the reference (short circuit) peak current which reflect the typical situation in a 230 V AC installation.

2 Normative references

There are no normative references in this document.

3 Terms and definitions

For the purposes of this document, the following terms and definitions apply.

ISO and IEC maintain terminological databases for use in standardization at the following addresses:

- IEC Electropedia: available at http://www.electropedia.org/
- ISO Online browsing platform: available at http://www.iso.org/obp

3.1
bidirectional diode thyristor
DIAC
two-terminal thyristor having substantially the same switching behaviour in the first and third quadrants of the current-voltage characteristic

[SOURCE: IEC 60050-521:2002, 521-04-66]

3.2
bidirectional triode thyristor
TRIAC
three-terminal thyristor having substantially the same switching behaviour in the first and third quadrants of the current-voltage characteristic

[SOURCE: IEC 60050-521:2002, 521-04-67]

AVA Documents Document Sharing Hub

Full document details: IEC 63129-2020

3.3
circuit-breaker
mechanical switching device, capable of making, carrying and breaking currents under normal circuit conditions and also making, carrying for a specified duration and breaking currents under specified abnormal circuit conditions such as those of short circuit

[SOURCE: IEC 60050-441:2000, 441-14-20]

3.4
control gear
controlgear
<for an electric light source> unit inserted between the power supply (IEV 151-13-75) and at least one light source, which serves to supply the light source(s) with its (their) rated voltage or rated current, and which can consist of one or more separate components

Note 1 to entry: The control gear can include means for igniting, dimming, correcting the power factor and suppressing radio interference, and further control functions.

Note 2 to entry: The control gear consists of a power supply (IEV 151-13-76) and a control unit.

Note 3 to entry: The control gear can be partly or totally integrated in the light source.

Note 4 to entry: The terms "control gear" and "controlgear" are interchangeable. In IEC standards, the term "controlgear" is commonly used.

[SOURCE: IEC 60050-845:—, 845-28-048]

3.5
I_{inrush}
inrush current
transient current associated with energizing of electrical apparatus or components

EXAMPLE Lighting products, transformers, cables, reactors.

[SOURCE: IEC 60050-448:1995, 448-11-30, modified – In the definition, "electrical apparatus or components" replaces "transformer, cables, reactors, etc." now given as examples.]

3.6
t_{Hx}
inrush current pulse duration
time period over which the value of the inrush current is larger than x % of the peak inrush current

Note 1 to entry: See also Figure 1.

Note 2 to entry: Any RF noise should be disregarded.

Note 3 to entry: By this definition, the inrush current pulse duration t_{H50} is the full width at half maximum (FWHM) of the current pulse.

Note 4 to entry: In this document values of x = 10 and x = 50 are used.

3.7
I_{peak}
peak inrush current
maximum of the absolute value of the inrush current

Note 1 to entry: The peak inrush current is typically reached when switch-on happens at the point in time that the mains voltage is at its peak.

Note 2 to entry: See also Figure 1.

Note 3 to entry: Any RF noise should be disregarded.

Documents
Document Sharing Hub
Full document details: IEC 63129-2020

4 Symbols and abbreviated terms

DIAC	bidirectional diode thyristor
DUT	device under test
MCB	miniature circuit breaker
NTC	negative temperature coefficient thermistor
TRIAC	bidirectional triode thyristor
k	number of DUTs (as represented by the corresponding measurement setup)
n	maximum number of DUTs (intended to be characterized)
I_{ref}	reference (short circuit) peak current
L_{ref}	reference (line) inductance
$I_{\text{adj},k}$	short circuit peak current (for k DUT)
L_k	inductance (for k DUT)
$R_{\text{adj},k}$	adjustment resistance (for k DUT)
I_{max}	maximum current (as measured)
t_{max}	time at which maximum current I_{max} is reached
U_{max}	maximum voltage (as measured at t_{max})
$I_{\text{peak},k}$	peak inrush current (for k DUT)
$t_{\text{Hx},k}$	inrush current pulse duration (for a threshold of x % of the peak inrush current and k DUT)

5 General notes on measurements

In this document the term DUT (device under test) is used for the lighting product for which the inrush current characteristics are determined according to the requirements of this document.

Controlgear shall be operated at maximum power (100 % light output) and with actual loads or dummy loads as specified by the manufacturer.

6 Inrush current measurements

For the measurements, a reference (line) inductance of L_{ref} = 100 µH and a reference (short circuit) peak current I_{ref} = 400 A are used that reflect the average situation in 230 V installations. The values are based on tests conducted by switch manufacturers that suggest that they represent an appropriate average value. When a different mains voltage is used, the reference line inductance value and the reference peak current value may need to be adjusted.

Inrush current measurements could be done with one DUT and the result multiplied by the number of devices in the installation considered.

However, this does not reflect the situation in installations as they can be typically found. When different devices are connected in different parts of the circuit, the characteristics of the inrush current as well as the resulting voltage drop in the line are different. Therefore, the reference values defined above are used to simulate the average situation.

Measuring a number of k individual DUTs in one measurement setup is equivalent to using one DUT while adjusting the impedance by a factor of k. Therefore, in particular the latter approach – which is the default approach followed in this document – results in a characterization of the inrush current of k DUTs connected to the same network.

AVA Documents
Document Sharing Hub

Full document details: IEC 63129-2020

The peak inrush current I_{peak} and the inrush current pulse duration t_{Hx} as a function of the number k of DUTs (represented by the corresponding measurement setup) are the key characteristics of interest. Therefore, typically a series of measurements is performed from k = 1 to the maximum number n of DUTs intended to be characterized. As a result, n pairs of peak inrush current values and inrush current pulse duration values ($I_{peak,k}$; $t_{Hx,k}$) are obtained. It is suggested to present these in table form as a function of k.

If only one peak inrush current value without further explanation is given, this is interpreted as I_{peak} (k = 1).

For illustration purposes, Figure 1 shows an exemplary inrush current pulse with the corresponding peak inrush current I_{peak} and inrush current pulse duration t_{H10} and t_{H50} with threshold values of x = 10 % and x = 50 % of the peak inrush current, respectively.

NOTE 1 It is suggested to use a default value of n that is the ratio of the rated current of the MCB or switch, respectively, divided by the rated current of the DUT.

It is not mandatory to perform all individual n measurements from k = 1 to k = n nor do the individual measurements have to follow k in numerical order.

NOTE 2 It might be advised to start with k = 1, then k = n and select intermediate values for k in order to reduce measurement time to establish the curves as described in Annex A.

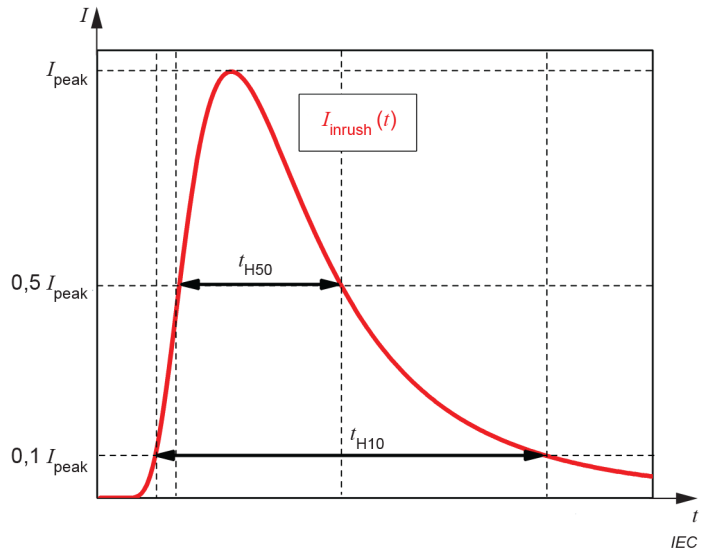

Key

I_{peak} peak inrush current

t_{H10}; t_{H50} inrush current pulse durations

Figure 1 – Determination of the inrush current pulse durations t_{H10} and t_{H50}

The DC method – as described in Clause 7 – shall be used as the default method.

In case the DC method is not suitable (e.g. zero crossing detection DUT or DUT with mains transformer), the AC method, as described in Clause 8 may be used alternatively. The AC method, however, is not preferred, as the mains voltage that is used in the AC method instead of a defined sine wave from a voltage generator is subject to fluctuations that are not reflected in the measurement setup. Thus, the results from the AC method are less accurate.

For k > 4 the AC method values typically do not deviate by more than 20 % with respect to the DC method.

Documents
Document Sharing Hub
Full document details: IEC 63129-2020

Additional alternative methods allowing for a reduction of measurement time – as the adjustment procedure does not need to be repeated for all values of n – may be generally used as described in Clause 9 for both methods (DC and AC).

7 DC method (default method)

7.1 Measurement setup

The measurement setup to determine the inrush current of the DUT is given in Figure 2.

Current measurement shall be done by using a digital oscilloscope in combination with either a current probe or a shunt resistor.

If a current probe with an iron core is used, care should be taken that the current probe does not saturate in case of large currents. This can be verified by checking the specification of the maximum $I(t)$ of the probe. For high inrush currents of longer duration, a Rogowski current probe can be applied instead.

The switching unit shall contain an electronic switch that ensures bounce-free switching. It may be realized as depicted in Figure 3.

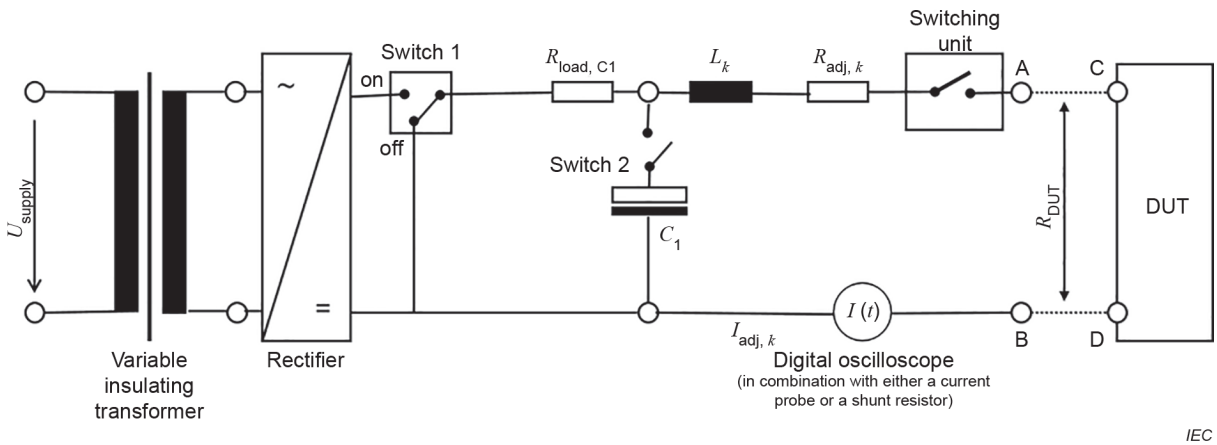

Key

U_{supply}	supply voltage
DUT	device under test
k	number of DUTs (as represented by the corresponding measurement setup)
L_k	inductance (for k DUTs)
$I_{adj,k}$	short circuit peak current
$R_{adj,k}$	adjustment resistance (for k DUTs)
R_{DUT}	resistance of DUT connection wires (≤ 0,1 Ω)
$R_{load,C1}$	load resistance ($R_{load,C1}$ = 47 Ω)
C_1	load capacitance (C_1 = 750 µF)
A, B	short circuit terminals
C, D	DUT terminals

Figure 2 – Measurement setup for the DC method (default method)

Documents
Document Sharing Hub
Full document details: IEC 63129-2020

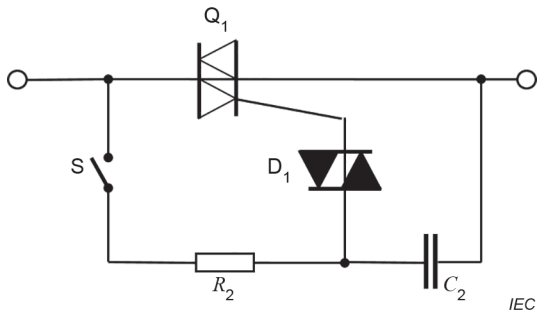

Key

S: Switch

Q_1 TRIAC (Q8025R5 or equivalent)

D_1 DIAC (DB3 or equivalent)

C_2 = 47 nF

R_2 = 1 kΩ

Figure 3 – Switching unit

7.2 Determining the value of the adjustment resistance

7.2.1 Determining the value of $R_{adj,1}$

In subclause 7.2.1 the procedure is explained to determine the value of the adjustment resistance $R_{adj,1}$ with one DUT connected to the circuit. $R_{adj,1}$ shall be adjusted in such a way that the short circuit peak current $I_{adj,1}$, measured by the digital oscilloscope (see Figure 2) reaches the reference value of I_{ref} = 400 A using the following procedure:

a) Set up a measurement for k = 1 according to Figure 2 using a supply voltage with U_{RMS} = 230 V with L_1 = L_{ref} and $R_{adj,1}$. Start with an arbitrary value of $R_{adj,1}$, for instance 0,5 Ω.

b) Connect terminals A and B establishing a short circut.

c) Turn on switch 2, then turn on switch 1.

d) Measure the voltage across the capacitor, C_1, with an oscilloscope (oscilloscope not shown in Figure 2). Wait until this voltage has stabilized at 325 V, the supply voltage peak value.

e) Turn on the switching unit and record the voltage across C_1 and the current (according to Figure 2) as a function of time.

f) Now with capacitor C_1 starting to discharge, the current will rise, while the voltage across C_1 will decrease, see Figure 4.

Documents
Document Sharing Hub
Full document details: IEC 63129-2020