IEC 63185

Edition 1.0 2020-12

INTERNATIONAL STANDARD

NORME INTERNATIONALE

colour inside

Measurement of the complex permittivity for low-loss dielectric substrates balanced-type circular disk resonator method

Méthode au résonateur à disque circulaire de type symétrique pour mesurer la permittivité complexe des substrats diélectriques à faible perte

IEC 63185:2020-12(en-fr)

Documents
Document Sharing Hub

Full document details: IEC 63185-2020

THIS PUBLICATION IS COPYRIGHT PROTECTED
Copyright © 2020 IEC, Geneva, Switzerland

All rights reserved. Unless otherwise specified, no part of this publication may be reproduced or utilized in any form or by any means, electronic or mechanical, including photocopying and microfilm, without permission in writing from either IEC or IEC's member National Committee in the country of the requester. If you have any questions about IEC copyright or have an enquiry about obtaining additional rights to this publication, please contact the address below or your local IEC member National Committee for further information.

Droits de reproduction réservés. Sauf indication contraire, aucune partie de cette publication ne peut être reproduite ni utilisée sous quelque forme que ce soit et par aucun procédé, électronique ou mécanique, y compris la photocopie et les microfilms, sans l'accord écrit de l'IEC ou du Comité national de l'IEC du pays du demandeur. Si vous avez des questions sur le copyright de l'IEC ou si vous désirez obtenir des droits supplémentaires sur cette publication, utilisez les coordonnées ci-après ou contactez le Comité national de l'IEC de votre pays de résidence.

IEC Central Office
3, rue de Varembé
CH-1211 Geneva 20
Switzerland

Tel.: +41 22 919 02 11
info@iec.ch
www.iec.ch

About the IEC
The International Electrotechnical Commission (IEC) is the leading global organization that prepares and publishes International Standards for all electrical, electronic and related technologies.

About IEC publications
The technical content of IEC publications is kept under constant review by the IEC. Please make sure that you have the latest edition, a corrigendum or an amendment might have been published.

IEC publications search - webstore.iec.ch/advsearchform
The advanced search enables to find IEC publications by a variety of criteria (reference number, text, technical committee,…). It also gives information on projects, replaced and withdrawn publications.

IEC Just Published - webstore.iec.ch/justpublished
Stay up to date on all new IEC publications. Just Published details all new publications released. Available online and once a month by email.

IEC Customer Service Centre - webstore.iec.ch/csc
If you wish to give us your feedback on this publication or need further assistance, please contact the Customer Service Centre: sales@iec.ch.

Electropedia - www.electropedia.org
The world's leading online dictionary on electrotechnology, containing more than 22 000 terminological entries in English and French, with equivalent terms in 16 additional languages. Also known as the International Electrotechnical Vocabulary (IEV) online.

IEC Glossary - std.iec.ch/glossary
67 000 electrotechnical terminology entries in English and French extracted from the Terms and Definitions clause of IEC publications issued since 2002. Some entries have been collected from earlier publications of IEC TC 37, 77, 86 and CISPR.

A propos de l'IEC
La Commission Electrotechnique Internationale (IEC) est la première organisation mondiale qui élabore et publie des Normes internationales pour tout ce qui a trait à l'électricité, à l'électronique et aux technologies apparentées.

A propos des publications IEC
Le contenu technique des publications IEC est constamment revu. Veuillez vous assurer que vous possédez l'édition la plus récente, un corrigendum ou amendement peut avoir été publié.

Recherche de publications IEC - webstore.iec.ch/advsearchform
La recherche avancée permet de trouver des publications IEC en utilisant différents critères (numéro de référence, texte, comité d'études,…). Elle donne aussi des informations sur les projets et les publications remplacées ou retirées.

IEC Just Published - webstore.iec.ch/justpublished
Restez informé sur les nouvelles publications IEC. Just Published détaille les nouvelles publications parues. Disponible en ligne et une fois par mois par email.

Service Clients - webstore.iec.ch/csc
Si vous désirez nous donner des commentaires sur cette publication ou si vous avez des questions contactez-nous: sales@iec.ch.

Electropedia - www.electropedia.org
Le premier dictionnaire d'électrotechnologie en ligne au monde, avec plus de 22 000 articles terminologiques en anglais et en français, ainsi que les termes équivalents dans 16 langues additionnelles. Egalement appelé Vocabulaire Electrotechnique International (IEV) en ligne.

Glossaire IEC - std.iec.ch/glossary
67 000 entrées terminologiques électrotechniques, en anglais et en français, extraites des articles Termes et Définitions des publications IEC parues depuis 2002. Plus certaines entrées antérieures extraites des publications des CE 37, 77, 86 et CISPR de l'IEC.

Documents
Document Sharing Hub

Full document details: IEC 63185-2020

IEC 63185

Edition 1.0 2020-12

INTERNATIONAL STANDARD

NORME INTERNATIONALE

colour inside

Measurement of the complex permittivity for low-loss dielectric substrates balanced-type circular disk resonator method

Méthode au résonateur à disque circulaire de type symétrique pour mesurer la permittivité complexe des substrats diélectriques à faible perte

INTERNATIONAL ELECTROTECHNICAL COMMISSION

COMMISSION ELECTROTECHNIQUE INTERNATIONALE

ICS 33.120.30

ISBN 978-2-8322-9133-7

Warning! Make sure that you obtained this publication from an authorized distributor.
Attention! Veuillez vous assurer que vous avez obtenu cette publication via un distributeur agréé.

® Registered trademark of the International Electrotechnical Commission
Marque déposée de la Commission Electrotechnique Internationale

AVA Documents
Document Sharing Hub

Full document details: IEC 63185-2020

CONTENTS

FOREWORD 3
1 Scope 5
2 Normative references 5
3 Terms and definitions 5
4 Measurement parameters 6
5 Theory and calculation equations 6
6 Measurement system 8
7 Measurement procedure 9
7.1 Preparation of measurement apparatus 9
7.2 Adjustment of measurement conditions 9
7.3 Calibration of a vector network analyzer 9
7.4 Measurement of complex permittivity of test sample 10
7.5 Periodic checkup of metal in resonator 10
Annex A (informative) Example of measurement results and associated uncertainties for complex permittivity 11
Bibliography 13

Figure 1 – Structure of a circular disk resonator 7
Figure 2 – Relations between resonant frequency and relative permittivity 8
Figure 3 – Schematic diagram of a vector network analyzer measurement system 9
Figure 4 – Frequency response of $|S_{21}|$ of balanced-type circular disk resonator 10

Table A.1 – Parameters of the cavity and the sheet sample 11
Table A.2 – The resonant frequencies and unloaded Q-factors 11
Table A.3 – Measurement results of complex permittivity 12

Documents
Document Sharing Hub
Full document details: IEC 63185-2020

INTERNATIONAL ELECTROTECHNICAL COMMISSION

MEASUREMENT OF THE COMPLEX PERMITTIVITY FOR LOW-LOSS DIELECTRIC SUBSTRATES BALANCED-TYPE CIRCULAR DISK RESONATOR METHOD

FOREWORD

1) The International Electrotechnical Commission (IEC) is a worldwide organization for standardization comprising all national electrotechnical committees (IEC National Committees). The object of IEC is to promote international co-operation on all questions concerning standardization in the electrical and electronic fields. To this end and in addition to other activities, IEC publishes International Standards, Technical Specifications, Technical Reports, Publicly Available Specifications (PAS) and Guides (hereafter referred to as "IEC Publication(s)"). Their preparation is entrusted to technical committees; any IEC National Committee interested in the subject dealt with may participate in this preparatory work. International, governmental and non-governmental organizations liaising with the IEC also participate in this preparation. IEC collaborates closely with the International Organization for Standardization (ISO) in accordance with conditions determined by agreement between the two organizations.
2) The formal decisions or agreements of IEC on technical matters express, as nearly as possible, an international consensus of opinion on the relevant subjects since each technical committee has representation from all interested IEC National Committees.
3) IEC Publications have the form of recommendations for international use and are accepted by IEC National Committees in that sense. While all reasonable efforts are made to ensure that the technical content of IEC Publications is accurate, IEC cannot be held responsible for the way in which they are used or for any misinterpretation by any end user.
4) In order to promote international uniformity, IEC National Committees undertake to apply IEC Publications transparently to the maximum extent possible in their national and regional publications. Any divergence between any IEC Publication and the corresponding national or regional publication shall be clearly indicated in the latter.
5) IEC itself does not provide any attestation of conformity. Independent certification bodies provide conformity assessment services and, in some areas, access to IEC marks of conformity. IEC is not responsible for any services carried out by independent certification bodies.
6) All users should ensure that they have the latest edition of this publication.
7) No liability shall attach to IEC or its directors, employees, servants or agents including individual experts and members of its technical committees and IEC National Committees for any personal injury, property damage or other damage of any nature whatsoever, whether direct or indirect, or for costs (including legal fees) and expenses arising out of the publication, use of, or reliance upon, this IEC Publication or any other IEC Publications.
8) Attention is drawn to the Normative references cited in this publication. Use of the referenced publications is indispensable for the correct application of this publication.
9) Attention is drawn to the possibility that some of the elements of this IEC Publication may be the subject of patent rights. IEC shall not be held responsible for identifying any or all such patent rights.

International Standard IEC 63185 has been prepared by subcommittee 46F: RF and microwave passive components, of IEC technical committee 46: Cables, wires, waveguides, RF connectors, RF and microwave passive components and accessories.

The text of this International Standard is based on the following documents:

FDIS	Report on voting
46F/523/FDIS	46F/531/RVD

Full information on the voting for the approval of this International Standard can be found in the report on voting indicated in the above table.

This document has been drafted in accordance with the ISO/IEC Directives, Part 2.

Documents
Document Sharing Hub

Full document details: IEC 63185-2020

The committee has decided that the contents of this document will remain unchanged until the stability date indicated on the IEC website under "http://webstore.iec.ch" in the data related to the specific document. At this date, the document will be

- reconfirmed,
- withdrawn,
- replaced by a revised edition, or
- amended.

IMPORTANT – The 'colour inside' logo on the cover page of this publication indicates that it contains colours which are considered to be useful for the correct understanding of its contents. Users should therefore print this document using a colour printer.

Documents
Document Sharing Hub

Full document details: IEC 63185-2020

MEASUREMENT OF THE COMPLEX PERMITTIVITY FOR LOW-LOSS DIELECTRIC SUBSTRATES BALANCED-TYPE CIRCULAR DISK RESONATOR METHOD

1 Scope

This document relates to a measurement method for complex permittivity of a dielectric substrates at microwave and millimeter-wave frequencies. This method has been developed to evaluate the dielectric properties of low-loss materials used in microwave and millimeter-wave circuits and devices. It uses higher-order modes of a balanced-type circular disk resonator and provides broadband measurements of dielectric substrates by using one resonator, where the effect of excitation holes is taken into account accurately on the basis of the mode-matching analysis.

In comparison with the conventional method described in IEC 62810 and IEC 61338-1-3, this method has the following characteristics:

- the values of the relative permittivity ε_r' and loss tangent $\tan\delta$ normal to dielectric plate samples can be measured accurately and non-destructively;
- this method presents broadband measurements by using higher-order modes by one resonator;
- this method is applicable for the measurements on the following condition:
  - frequency: $10\ \text{GHz} \leq f \leq 110\ \text{GHz}$;
  - relative permittivity: $1 \leq \varepsilon_r' \leq 10$;
  - loss tangent: $10^{-4} \leq \tan\delta \leq 10^{-2}$.

2 Normative references

The following documents are referred to in the text in such a way that some or all of their content constitutes requirements of this document. For dated references, only the edition cited applies. For undated references, the latest edition of the referenced document (including any amendments) applies.

IEC 61338-1-3:1999, *Waveguide type dielectric resonators – Part 1-3: General information and test conditions – Measurement method of complex relative permittivity for dielectric resonator materials at microwave frequency*

IEC 62810:2015, *Cylindrical cavity method to measure the complex permittivity of low-loss dielectric rods*

3 Terms and definitions

No terms and definitions are listed in this document.

ISO and IEC maintain terminological databases for use in standardization at the following addresses:

- IEC Electropedia: available at http://www.electropedia.org/
- ISO Online browsing platform: available at http://www.iso.org/obp

Documents
Document Sharing Hub

Full document details: IEC 63185-2020

4 Measurement parameters

The measurement parameters are defined as follows:

$$\varepsilon_r = \varepsilon_r' - j\varepsilon_r'' \quad (1)$$

$$\tan\delta = \varepsilon_r''/\varepsilon_r' \quad (2)$$

where ε_r' and ε_r'' are the real and imaginary parts of the complex relative permittivity ε_r.

5 Theory and calculation equations

A resonator structure used in this method is shown in Figure 1. A thin circular conductor disk with radius R is sandwiched between a pair of dielectric plate samples to be measured having the same thickness t and dielectric properties ε_r' and $\tan\delta$. Dielectric samples are sandwiched by two parallel conductor plates. The thickness of the conductor disk is negligibly thin in the analysis.

The resonator is excited and detected by coaxial lines through excitation holes having radius a and length M. Because only the TM_{0m0} modes have the electric field in the center of the resonator, only those modes are selectively excited in the resonator, where the electric field components in the resonator are normal to the plate samples for those modes.

ε_r' and $\tan\delta$ normal to the dielectric plates are determined from the measured values of the resonant frequencies f_0 and the unloaded Q-factor Q_u for the TM_{0m0} mode by solving the following resonant condition derived from the mode-matching analysis, where the exciting holes are accurately taken into account:

$$\det H(\varepsilon_r', f_0, t, R, a, M) = 0 \quad (3)$$

$$\tan\delta = (1/Q_u - 1/Q_c)(1 + W_1/W_2) \quad (4)$$

where

H is $N \times N$ matrix derived from the boundary conditions;

N is the number of terms of the series expansions for the mode-matching analysis;

Q_c is the Q-factor due to the conductor loss;

W_1 and W_2 are the electric energies stored in the dielectric region and the excitation hole region, respectively.

W_1 and W_2 are calculated from the mode-matching analysis, and Q_c can be approximately by

$$Q_c = t/\delta_S = t(\pi f_0 \mu_0 \sigma)^{0,5} \quad (5)$$

where

δ_S is the skin depth of the conductor;

σ is the conductivity;

μ_0 is the permeability of free space.

Documents
Document Sharing Hub
Full document details: IEC 63185-2020

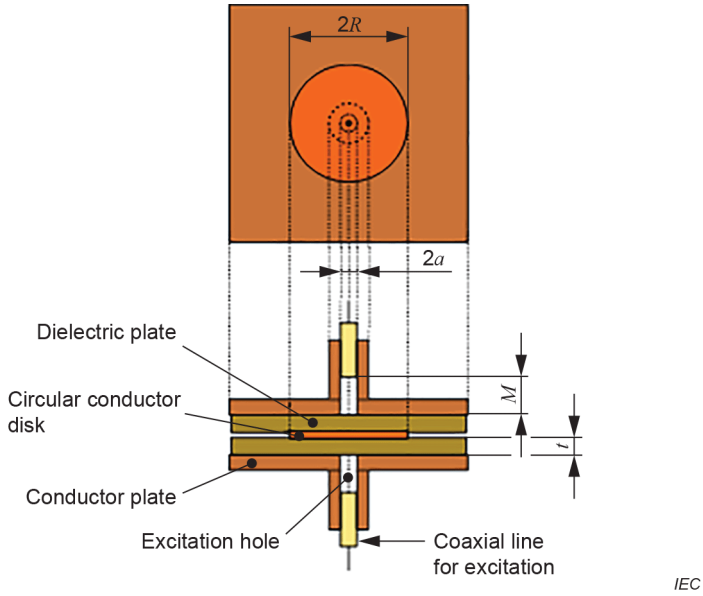

Figure 1 – Structure of a circular disk resonator

The maximum measurable frequency is limited by the following three cutoff frequencies:

a) cutoff frequency of coaxial lines used to excite the resonator f_c^{Coax};

b) cutoff frequency of excitation holes f_c^{Hole};

c) cutoff frequency for radial radiation through dielectric samples f_c^{Rad}.

f_c^{Hole} is calculated as a cutoff frequency for TM_{01} mode of a circular waveguide with radius a and is given by

$$f_c^{Hole} = \chi_{01}/2\pi a \tag{6}$$

where

$\chi_{01} \approx 2{,}404\ 8$ is the first root of $J_0(x) = 0$;

$J_0(x)$ is the Bessel function of order 0 of first kind;

c is the light velocity.

f_c^{Rad} is determined by the sample thickness t and relative permittivity ε_r' and is given by

$$f_c^{Rad} = c/4t(\varepsilon_r')^{0,5} \tag{7}$$

Figure 2 shows the relations between f_0 and ε_r' for TM_{0m0} modes for R = 7,5 mm, a = 0,6 mm, M = 5 mm, and t = 0,3 mm. Multiple resonances are appeared from 5 GHz to 110 GHz for $1 \leq \varepsilon_r' \leq 10$ (5 to 11 modes). Radiation limit (f_c^{Rad}) is also shown in the same figure.

Documents
Document Sharing Hub
Full document details: IEC 63185-2020