IEC 63203-201-3

Edition 1.0 2021-04

INTERNATIONAL STANDARD

NORME INTERNATIONALE

Wearable electronic devices and technologies – Part 201-3: Electronic textile – Determination of electrical resistance of conductive textiles under simulated microclimate

Technologies et dispositifs électroniques prêts-à-porter – Partie 201-3: Textile électronique – Détermination de la résistance électrique des textiles conducteurs sous microclimat simulé

IEC 63203-201-3:2021-04(en-fr)

Documents
Document Sharing Hub

Full document details: IEC 63203-201-3-2021

THIS PUBLICATION IS COPYRIGHT PROTECTED
Copyright © 2021 IEC, Geneva, Switzerland

All rights reserved. Unless otherwise specified, no part of this publication may be reproduced or utilized in any form or by any means, electronic or mechanical, including photocopying and microfilm, without permission in writing from either IEC or IEC's member National Committee in the country of the requester. If you have any questions about IEC copyright or have an enquiry about obtaining additional rights to this publication, please contact the address below or your local IEC member National Committee for further information.

Droits de reproduction réservés. Sauf indication contraire, aucune partie de cette publication ne peut être reproduite ni utilisée sous quelque forme que ce soit et par aucun procédé, électronique ou mécanique, y compris la photocopie et les microfilms, sans l'accord écrit de l'IEC ou du Comité national de l'IEC du pays du demandeur. Si vous avez des questions sur le copyright de l'IEC ou si vous désirez obtenir des droits supplémentaires sur cette publication, utilisez les coordonnées ci-après ou contactez le Comité national de l'IEC de votre pays de résidence.

IEC Central Office
3, rue de Varembé
CH-1211 Geneva 20
Switzerland

Tel.: +41 22 919 02 11
info@iec.ch
www.iec.ch

About the IEC
The International Electrotechnical Commission (IEC) is the leading global organization that prepares and publishes International Standards for all electrical, electronic and related technologies.

About IEC publications
The technical content of IEC publications is kept under constant review by the IEC. Please make sure that you have the latest edition, a corrigendum or an amendment might have been published.

IEC publications search - webstore.iec.ch/advsearchform
The advanced search enables to find IEC publications by a variety of criteria (reference number, text, technical committee, …). It also gives information on projects, replaced and withdrawn publications.

IEC Just Published - webstore.iec.ch/justpublished
Stay up to date on all new IEC publications. Just Published details all new publications released. Available online and once a month by email.

IEC Customer Service Centre - webstore.iec.ch/csc
If you wish to give us your feedback on this publication or need further assistance, please contact the Customer Service Centre: sales@iec.ch.

IEC online collection - oc.iec.ch
Discover our powerful search engine and read freely all the publications previews. With a subscription you will always have access to up to date content tailored to your needs.

Electropedia - www.electropedia.org
The world's leading online dictionary on electrotechnology, containing more than 22 000 terminological entries in English and French, with equivalent terms in 18 additional languages. Also known as the International Electrotechnical Vocabulary (IEV) online.

A propos de l'IEC
La Commission Electrotechnique Internationale (IEC) est la première organisation mondiale qui élabore et publie des Normes internationales pour tout ce qui a trait à l'électricité, à l'électronique et aux technologies apparentées.

A propos des publications IEC
Le contenu technique des publications IEC est constamment revu. Veuillez vous assurer que vous possédez l'édition la plus récente, un corrigendum ou amendement peut avoir été publié.

Recherche de publications IEC - webstore.iec.ch/advsearchform
La recherche avancée permet de trouver des publications IEC en utilisant différents critères (numéro de référence, texte, comité d'études, …). Elle donne aussi des informations sur les projets et les publications remplacées ou retirées.

IEC Just Published - webstore.iec.ch/justpublished
Restez informé sur les nouvelles publications IEC. Just Published détaille les nouvelles publications parues. Disponible en ligne et une fois par mois par email.

Service Clients - webstore.iec.ch/csc
Si vous désirez nous donner des commentaires sur cette publication ou si vous avez des questions contactez-nous: sales@iec.ch.

IEC online collection - oc.iec.ch
Découvrez notre puissant moteur de recherche et consultez gratuitement tous les aperçus des publications. Avec un abonnement, vous aurez toujours accès à un contenu à jour adapté à vos besoins.

Electropedia - www.electropedia.org
Le premier dictionnaire d'électrotechnologie en ligne au monde, avec plus de 22 000 articles terminologiques en anglais et en français, ainsi que les termes équivalents dans 16 langues additionnelles. Egalement appelé Vocabulaire Electrotechnique International (IEV) en ligne.

AVA Documents
Document Sharing Hub

Full document details: IEC 63203-201-3-2021

IEC 63203-201-3

Edition 1.0 2021-04

INTERNATIONAL STANDARD

NORME INTERNATIONALE

Wearable electronic devices and technologies – Part 201-3: Electronic textile – Determination of electrical resistance of conductive textiles under simulated microclimate

Technologies et dispositifs électroniques prêts-à-porter – Partie 201-3: Textile électronique – Détermination de la résistance électrique des textiles conducteurs sous microclimat simulé

INTERNATIONAL
ELECTROTECHNICAL
COMMISSION

COMMISSION
ELECTROTECHNIQUE
INTERNATIONALE

ICS 59.080.80

ISBN 978-2-8322-9640-0

Warning! Make sure that you obtained this publication from an authorized distributor.
Attention! Veuillez vous assurer que vous avez obtenu cette publication via un distributeur agréé.

® Registered trademark of the International Electrotechnical Commission
Marque déposée de la Commission Electrotechnique Internationale

Documents
Document Sharing Hub

Full document details: IEC 63203-201-3-2021

CONTENTS

FOREWORD 3
1 Scope 5
2 Normative references 5
3 Terms and definitions 5
4 Principle of test 6
5 Test equipment 6
5.1 Sweating guarded-hotplate 6
5.2 Device including temperature and humidity sensor with set-up of the four electrode – four wire method 6
5.3 Membranes 7
5.4 Test enclosure of the sweating guarded-hotplate 7
6 Test specimens 8
6.1 Number of test specimens 8
6.2 Dimension of specimens 9
6.3 Conditioning 9
7 Test procedure 9
7.1 Preparation of textile-based electrically conductive track contact points for necessary measurement stability 9
7.2 Specimen mounting on measuring unit 9
7.3 Determination of the apparatus constant R_{et0_al} and measurement of water-vapour resistance including air layer R_{et_al} and RH) 9
7.4 Determination of linear electrical resistance 9
8 Test report 10
Annex A (informative) Example of test results 11
A.1 Sample 11
A.2 R_{et_al}, RH and R_L 11
Bibliography 13

Figure 1 – Sweating guarded-hotplate 7
Figure 2 – Device including temperature and humidity sensor with set-up of four electrode – four wire method 8
Figure 3 – Example of textile-based electrically conductive track 8
Figure A.1 – Conductive fabric 11

Table A.1 – Arithmetic mean and CV % of test results 12

Documents
Document Sharing Hub

Full document details: IEC 63203-201-3-2021

INTERNATIONAL ELECTROTECHNICAL COMMISSION

WEARABLE ELECTRONIC DEVICES AND TECHNOLOGIES –

Part 201-3: Electronic textile – Determination of electrical resistance of conductive textiles under simulated microclimate

FOREWORD

1) The International Electrotechnical Commission (IEC) is a worldwide organization for standardization comprising all national electrotechnical committees (IEC National Committees). The object of IEC is to promote international co-operation on all questions concerning standardization in the electrical and electronic fields. To this end and in addition to other activities, IEC publishes International Standards, Technical Specifications, Technical Reports, Publicly Available Specifications (PAS) and Guides (hereafter referred to as "IEC Publication(s)"). Their preparation is entrusted to technical committees; any IEC National Committee interested in the subject dealt with may participate in this preparatory work. International, governmental and non-governmental organizations liaising with the IEC also participate in this preparation. IEC collaborates closely with the International Organization for Standardization (ISO) in accordance with conditions determined by agreement between the two organizations.
2) The formal decisions or agreements of IEC on technical matters express, as nearly as possible, an international consensus of opinion on the relevant subjects since each technical committee has representation from all interested IEC National Committees.
3) IEC Publications have the form of recommendations for international use and are accepted by IEC National Committees in that sense. While all reasonable efforts are made to ensure that the technical content of IEC Publications is accurate, IEC cannot be held responsible for the way in which they are used or for any misinterpretation by any end user.
4) In order to promote international uniformity, IEC National Committees undertake to apply IEC Publications transparently to the maximum extent possible in their national and regional publications. Any divergence between any IEC Publication and the corresponding national or regional publication shall be clearly indicated in the latter.
5) IEC itself does not provide any attestation of conformity. Independent certification bodies provide conformity assessment services and, in some areas, access to IEC marks of conformity. IEC is not responsible for any services carried out by independent certification bodies.
6) All users should ensure that they have the latest edition of this publication.
7) No liability shall attach to IEC or its directors, employees, servants or agents including individual experts and members of its technical committees and IEC National Committees for any personal injury, property damage or other damage of any nature whatsoever, whether direct or indirect, or for costs (including legal fees) and expenses arising out of the publication, use of, or reliance upon, this IEC Publication or any other IEC Publications.
8) Attention is drawn to the Normative references cited in this publication. Use of the referenced publications is indispensable for the correct application of this publication.
9) Attention is drawn to the possibility that some of the elements of this IEC Publication may be the subject of patent rights. IEC shall not be held responsible for identifying any or all such patent rights.

International Standard IEC 63203-201-3 has been prepared by IEC technical committee 124: Wearable electronic devices and technologies.

The text of this International Standard is based on the following documents:

FDIS	Report on voting
124/136/FDIS	124/142/RVD

Full information on the voting for the approval of this International Standard can be found in the report on voting indicated in the above table.

This document has been drafted in accordance with the ISO/IEC Directives, Part 2.

A list of all parts in the IEC 63203 series, published under the general title *Wearable electronic devices and technologies*, can be found on the IEC website.

Documents
Document Sharing Hub

Full document details: IEC 63203-201-3-2021

The committee has decided that the contents of this document will remain unchanged until the stability date indicated on the IEC website under "http://webstore.iec.ch" in the data related to the specific document. At this date, the document will be

- reconfirmed,
- withdrawn,
- replaced by a revised edition, or
- amended.

Documents
Document Sharing Hub

Full document details: IEC 63203-201-3-2021

WEARABLE ELECTRONIC DEVICES AND TECHNOLOGIES –

Part 201-3: Electronic textile – Determination of electrical resistance of conductive textiles under simulated microclimate

1 Scope

This part of IEC 63203-201 specifies a test method for determination of the electrical resistance of conductive fabrics under simulated microclimate within clothing. The microclimate is the climate of the small air layer between the skin and clothing having a specific temperature and humidity. This test method can be applied to conductive fabrics including multilayer assemblies for use in clothing.

2 Normative references

The following documents are referred to in the text in such a way that some or all of their content constitutes requirements of this document. For dated references, only the edition cited applies. For undated references, the latest edition of the referenced document (including any amendments) applies.

ISO 139, *Textiles – Standard atmospheres for conditioning and testing*

ISO 11092:2014, *Textiles – Physiological effects – Measurement of thermal and water-vapour resistance under steady-state conditions (sweating guarded-hotplate test)*

ISO 21232:2018, *Textiles – Determination of moisturizing effect of textile materials by measurement of microclimate between textiles and simulated human skin using sweating guarded hotplate*

EN 16812:2016, *Textiles and textile products – Electrically conductive textiles – Determination of the linear electrical resistance of conductive tracks*

3 Terms and definitions

For the purposes of this document, the following terms and definitions apply.

ISO and IEC maintain terminological databases for use in standardization at the following addresses:

- IEC Electropedia: available at http://www.electropedia.org/
- ISO Online browsing platform: available at http://www.iso.org/obp

3.1
textile-based electrically conductive track
electrically conductive part of the textile having a length (L) to width (W) ratio of minimum 10 to 1

[SOURCE: EN 16812:2016, 3.1, modified – Note 1 to entry has been deleted.]

Documents
Document Sharing Hub

Full document details: IEC 63203-201-3-2021

3.2
linear electrical resistance
R_L
electrical resistance per unit length of a track

Note 1 to entry: Linear electrical resistance is expressed in ohm per metre.

[SOURCE: EN 16812:2016, 3.3, modified – Note 1 to entry has been added.]

3.3
microclimate
climate of the small air layer (between the skin and the clothing or between textiles and sweating guarded-hotplate)

Note 1 to entry: This microclimate has specific temperature and humidity characteristics. Simulated microclimate is the climate of the air layer between fabric and sweating guarded-hotplate.

[SOURCE: ISO 21232:2018, 3.2, modified – A hyphen has been added to the term "sweating guarded hotplate" and the second sentence in the note has been added.]

3.4
water-vapour resistance including air layer
R_{et_al}
water-vapour pressure difference between the two faces of a material (separated from each other by 5 mm) divided by the resultant evaporative heat flux per unit area in the direction of the gradient

Note 1 to entry: Water-vapour resistance is measured under the simulated state in which the air layer exists between the skin and clothing.

Note 2 to entry: Water-vapour resistance including air layer is expressed in square metres pascal per watt.

[SOURCE: ISO 21232:2018, 3.3]

4 Principle of test

Clothing comfort depends on the environmental conditions (humidity, temperature) of the microclimate between the skin and the fabrics when clothing is worn. The e-textile system made of conductive fabrics is in direct contact with human skin so that the electrical resistance of conductive fabrics is affected by the microclimate between human skin and fabric. Therefore, this test method can perform the combined measurement of electrical resistance using the measurement principle of the four-wire Kelvin method and a DC current source, under a simulated microclimate.

5 Test equipment

5.1 Sweating guarded-hotplate

For the test device, the sweating guarded-hotplate (see Figure 1), specified in ISO 11092:2014, is used. The upper part is a measuring unit with temperature and water supply control and the lower part is a thermal guard with temperature control.

5.2 Device including temperature and humidity sensor with set-up of the four electrode – four wire method

5.2.1 The device shall be made of electrically non-conductive material. The device is used to create space for the air layer between hotplate and specimen. The sensor inside the device measures the microclimate between hotplate and specimen, specified in ISO 21232:2018 (see Figure 2).

AVA Documents
Document Sharing Hub
Full document details: IEC 63203-201-3-2021

5.2.2 An electrical current source, a voltage-meter and contacting electrodes measure electrical resistance. Electrodes shall be arranged for using the set-up of the four electrode – four wire method on the device and shall cover the whole width of the textile-based electrically conductive track, specified in EN 16812:2016, 6.2 (see Figure 2 and Figure 3). The electrodes shall be placed parallel to each other and they shall be movable forwards and backwards.

5.2.3 The specimen is fixed by magnets in the device. The diameter and thickness of the magnet are (5,0 ± 0,2) mm and (3,0 ± 0,1) mm, respectively. The magnetic flux density shall be higher than 0,3 T. The interval between magnets shall be less than 50 mm in the test device (see Figure 2).

5.3 Membranes

A water-vapour permeable but liquid-water impermeable membrane shall meet the requirements specified in ISO 11092:2014, 7.1.2.1 or in ISO 21232:2018, 5.4.

5.4 Test enclosure of the sweating guarded-hotplate

The requirements specified in ISO 11092:2014, 5.3 shall be met.

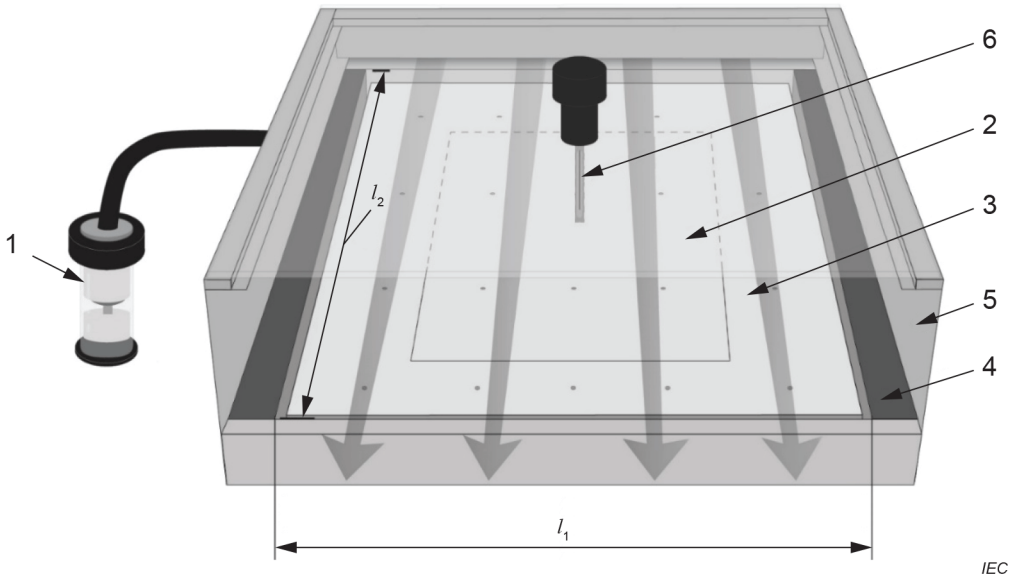

Key

1	water dosing device	4	measuring table
2	measuring unit	5	hotplate duct
3	thermal guard	6	air velocity sensor

Figure 1 – Sweating guarded-hotplate

Documents
Document Sharing Hub
Full document details: IEC 63203-201-3-2021