IEC 62270

Edition 2.0 2013-09

INTERNATIONAL STANDARD

IEEE Std 1249™

colour inside

Guide for computer-based control for hydroelectric power plant automation

IEC 62270:2013 IEEE Std 1249-2013

Documents
Document Sharing Hub

Authorized licensed use limited to: Tsinghua University. Downloaded on February 24,2026 at 13:00:55 UTC from IEEE Xplore. Restrictions apply.

Full document details: IEC/IEEE 1249-2013

THIS PUBLICATION IS COPYRIGHT PROTECTED
Copyright © 2013 IEEE

All rights reserved. IEEE is a registered trademark in the U.S. Patent & Trademark Office, owned by the Institute of Electrical and Electronics Engineers, Inc.

Unless otherwise specified, no part of this publication may be reproduced or utilized in any form or by any means, electronic or mechanical, including photocopying and microfilm, without permission in writing from the IEC Central Office.

Any questions about IEEE copyright should be addressed to the IEEE. Enquiries about obtaining additional rights to this publication and other information requests should be addressed to the IEC or your local IEC member National Committee.

IEC Central Office
3, rue de Varembé
CH-1211 Geneva 20
Switzerland
Tel.: +41 22 919 02 11
Fax: +41 22 919 03 00
info@iec.ch
www.iec.ch

Institute of Electrical and Electronics Engineers, Inc.
3 Park Avenue
New York, NY 10016-5997
United States of America
stds.info@ieee.org
www.ieee.org

About the IEC

The International Electrotechnical Commission (IEC) is the leading global organization that prepares and publishes International Standards for all electrical, electronic and related technologies.

About IEC publications

The technical content of IEC publications is kept under constant review by the IEC. Please make sure that you have the latest edition, a corrigendum or an amendment might have been published.

Useful links:

IEC publications search - www.iec.ch/searchpub

The advanced search enables you to find IEC publications by a variety of criteria (reference number, text, technical committee,…).
It also gives information on projects, replaced and withdrawn publications.

IEC Just Published - webstore.iec.ch/justpublished

Stay up to date on all new IEC publications. Just Published details all new publications released. Available on-line and also once a month by email.

Electropedia - www.electropedia.org

The world's leading online dictionary of electronic and electrical terms containing more than 30 000 terms and definitions in English and French, with equivalent terms in additional languages. Also known as the International Electrotechnical Vocabulary (IEV) on-line.

Customer Service Centre - webstore.iec.ch/csc

If you wish to give us your feedback on this publication or need further assistance, please contact the Customer Service Centre: csc@iec.ch.

Documents
Document Sharing Hub

Authorized licensed use limited to: Tsinghua University. Downloaded on February 24,2026 at 13:00:55 UTC from IEEE Xplore. Restrictions apply.

Full document details: IEC/IEEE 1249-2013

IEC 62270

Edition 2.0 2013-09

IEEE Std 1249™

INTERNATIONAL STANDARD

colour inside

Guide for computer-based control for hydroelectric power plant automation

INTERNATIONAL
ELECTROTECHNICAL
COMMISSION

PRICE CODE XB

ICS 27.140

ISBN 978-2-8322-1077-2

Warning! Make sure that you obtained this publication from an authorized distributor.

Documents
Document Sharing Hub

Authorized licensed use limited to: Tsinghua University. Downloaded on February 24,2026 at 13:00:55 UTC from IEEE Xplore. Restrictions apply.

Full document details: IEC/IEEE 1249-2013

CONTENTS

FOREWORD 1
1 Overview 3
1.1 Scope 3
1.2 Purpose 3
2 Terms and definitions 3
3 System architecture 8
3.1 General 8
3.2 Process control system configurations 8
3.2.1 Basic configuration 8
3.2.2 Control system configuration alternatives 9
3.3 System architecture characteristics 10
3.3.1 General 10
3.3.2 Hierarchy 10
3.3.3 Control locations and levels 11
3.3.4 Interface between the control system and the controlled process 12
3.4 Local individual control 12
3.5 Local control 13
3.6 Central (remote) control 13
3.7 Off-site control 14
4 Control Functions 14
4.1 Local control functions 14
4.1.1 Start/stop sequencing 14
4.1.2 Synchronizing 15
4.1.3 Synchronous condenser mode 15
4.1.4 Pumped storage control 15
4.1.5 Turbine operation optimization 16
4.1.6 Trashrack control 16
4.1.7 Environmental control 16
4.1.8 Black start control 17
4.2 Centralized control functions 17
4.2.1 Control of individual units 17
4.2.2 Switchyard, spillway, and station service control 18
4.2.3 Plant active power (MW) control 18
4.2.4 Plant reactive power (Mvar) control 18
4.2.5 Water and power optimization 18
4.2.6 Water bypass control 19
4.3 Offsite control functions 19
4.3.1 Control of individual generator sets and selection of centralized control functions 19
4.3.2 Switchyard, spillway, and station service control 20
4.3.3 Automatic generation control (AGC) 20
4.3.4 Automatic voltage control (AVC) 20

Published by IEC under license from IEEE. © 2013 IEEE. All rights reserved.
Documents
Document Sharing Hub
Authorized licensed use limited to: Tsinghua University. Downloaded on February 24,2026 at 13:00:55 UTC from IEEE Xplore. Restrictions apply.
Full document details: IEC/IEEE 1249-2013

4.3.5 Remedial action schemes (RAS) ... 21
4.4 Typical control parameters ... 21
4.5 Interfaces to other computerized systems ... 22
4.5.1 Fire detection data ... 22
4.5.2 Plant security system ... 23
4.5.3 Maintenance management system ... 23
4.5.4 Plant conditioning monitoring ... 23
5 Data acquisition and processing ... 23
5.1 Data integrity ... 23
5.2 Data acquisition capabilities ... 24
5.3 Analog ... 24
5.4 Discrete ... 25
5.4.1 Status points ... 25
5.4.2 Event points ... 25
5.4.3 Calculated points ... 25
5.4.4 Postmortem points ... 25
5.5 Alarm processing and diagnostics ... 25
5.6 Report generation ... 26
5.7 Data archival and retrieval ... 26
5.7.1 Operation scheduling and forecasting ... 26
5.7.2 Data access and security ... 27
5.7.3 Operator simulation training ... 27
6 Communications and data bases ... 27
6.1 Overview ... 27
6.2 Communications ... 27
6.2.1 General ... 27
6.2.2 Open system standards ... 27
6.2.3 Digital communication systems at the field level ... 28
6.2.4 Hydroelectric plant automation classification ... 28
6.2.5 Networking and communication considerations ... 29
6.2.6 Data communication functions ... 30
6.2.7 Control data communication requirements ... 30
6.3 Control data networks ... 33
6.3.1 General ... 33
6.3.2 Local area network (LAN) topologies ... 33
6.3.3 Physical transmission mode ... 37
6.4 Data bases and software configuration ... 37
6.4.1 Open systems and data bases ... 37
6.4.2 Real-time vs. nonreal-time database designs ... 38
6.4.3 Software configuration ... 39
7 User and plant interfaces ... 40
7.1 User interfaces ... 40
7.1.1 Input devices ... 40
7.1.2 Output devices ... 40
7.2 Plant equipment interfaces ... 40

Published by IEC under license from IEEE. © 2013 IEEE. All rights reserved.
Documents
Document Sharing Hub
Authorized licensed use limited to: Tsinghua University. Downloaded on February 24,2026 at 13:00:55 UTC from IEEE Xplore. Restrictions apply.
Full document details: IEC/IEEE 1249-2013

7.2.1 Types ... 40
7.2.2 Sources ... 42
7.2.3 Input/output protection ... 42
7.2.4 Collection process ... 43
7.3 Security considerations ... 43
7.4 Ergonomic and maintenance considerations ... 43
7.5 User interface considerations ... 44
8 System performance ... 44
8.1 General ... 44
8.2 Software ... 45
8.3 Hardware ... 45
8.3.1 Input/output (I/O) subsystem ... 45
8.3.2 Control processing subsystems ... 46
8.4 Communications ... 47
8.5 Maintenance performance ... 47
8.6 Measuring performance ... 48
8.6.1 Functionality ... 48
8.6.2 Real time ability ... 48
8.6.3 Availability ... 49
8.6.4 System initialization and fail-over times ... 50
9 System backup capabilities ... 50
9.1 General ... 50
9.2 Design principles ... 50
9.3 Basic functions ... 51
9.4 Design of equipment for backup control ... 51
9.4.1 Turbine/generator units ... 51
9.4.2 Circuit breakers and isolating switches (local control) ... 51
9.4.3 Governor and excitation systems (local control) ... 51
9.4.4 Spillways and intake gate/turbine isolation (shutoff) valve ... 52
9.5 Alarm handling ... 52
9.6 Protective function ... 52
10 Site integration and support systems ... 52
10.1 Overview ... 52
10.2 Interface to other equipment ... 52
10.3 Environmental considerations ... 53
10.4 Power source ... 53
10.5 Supervision of contact status points ... 54
10.6 Supervision of transducers ... 55
10.7 Supervision of IED or field bus devices ... 55
10.8 Control output points ... 55
10.9 Grounding ... 55
10.10 Static control ... 55
11 Recommended test and acceptance criteria ... 56
11.1 Overview ... 56
11.2 Specific test requirements ... 56

Published by IEC under license from IEEE. © 2013 IEEE. All rights reserved.
Documents Document Sharing Hub
Authorized licensed use limited to: Tsinghua University. Downloaded on February 24,2026 at 13:00:55 UTC from IEEE Xplore. Restrictions apply.
Full document details: IEC/IEEE 1249-2013

11.2.1 Factory acceptance test ... 56
11.2.2 Field test ... 57
11.3 Quality assurance ... 57
11.4 Acceptance ... 58
12 System management ... 58
12.1 Maintenance ... 58
12.2 Training ... 58
12.2.1 Training plan ... 58
12.2.2 Courses ... 59
12.3 Documentation ... 59
12.3.1 Design documentation ... 59
12.3.2 System support documentation ... 60
12.4 Archive ... 60
Annex A (informative) Bibliography ... 61
Annex B (informative) Legacy control systems ... 65
Annex C (informative) IEEE list of participants ... 68

Figure 1 – Generic control system configuration ... 9
Figure 2 – System with dedicated unit control processors ... 10
Figure 3 – Relationship of local, centralized and off-site control ... 12
Figure 4 – Typical functions – Unit local control board ... 13
Figure 5 – Multi-point data link versus LANs ... 33
Figure 6 – Star topology ... 35
Figure 7 – Ring topology ... 35
Figure 8 – Bus topology ... 36

Table 1 – Summary of control hierarchy for hydroelectric power plants ... 11
Table 2 – Typical parameters necessary to implement automated control ... 21
Table 3 – Classifications of hydroelectric power plant computer control systems ... 29
Table 4 – Hydroelectric computer control systems data communications attributes ... 36
Table 5 – Cable media characteristics ... 37

Published by IEC under license from IEEE. © 2013 IEEE. All rights reserved.
Documents
Document Sharing Hub
Authorized licensed use limited to: Tsinghua University. Downloaded on February 24,2026 at 13:00:55 UTC from IEEE Xplore. Restrictions apply.
Full document details: IEC/IEEE 1249-2013

Guide for Computer-Based Control for Hydroelectric Power Plant Automation

Sponsor

Energy Development and Power Generation Committee
of the
IEEE Power & Energy Society

IEEE-SA Standards Board

Published by IEC under license from IEEE. © 2013 IEEE. All rights reserved.

Documents
Document Sharing Hub

Authorized licensed use limited to: Tsinghua University. Downloaded on February 24,2026 at 13:00:55 UTC from IEEE Xplore. Restrictions apply.

Full document details: IEC/IEEE 1249-2013

Abstract: The application, design concepts and implementation of computer-based control systems for hydroelectric power plant automation is addressed. Functional capabilities, performance requirements, interface requirements, tradeoffs, and hardware considerations and operator training are discussed, including typical application examples.
Keywords: 62270, applications, computer-based control systems, functional capabilities, hardware considerations, hydroelectric power plant automation, hydroelectric power station, IEEE 1249™, interface requirements, operator training, performance requirements, recommendations

Published by IEC under license from IEEE. © 2013 IEEE. All rights reserved.

Documents
Document Sharing Hub

Authorized licensed use limited to: Tsinghua University. Downloaded on February 24,2026 at 13:00:55 UTC from IEEE Xplore. Restrictions apply.

Full document details: IEC/IEEE 1249-2013

IEEE Notice to users

Laws and regulations

Users of IEEE Standards documents should consult all applicable laws and regulations. Compliance with the provisions of any IEEE Standards document does not imply compliance to any applicable regulatory requirements. Implementers of the standard are responsible for observing or referring to the applicable regulatory requirements. IEEE does not, by the publication of its standards, intend to urge action that is not in compliance with applicable laws, and these documents may not be construed as doing so.

Copyrights

This document is copyrighted by the IEEE. It is made available for a wide variety of both public and private uses. These include both use, by reference, in laws and regulations, and use in private self-regulation, standardization, and the promotion of engineering practices and methods. By making this document available for use and adoption by public authorities and private users, the IEEE does not waive any rights in copyright to this document.

Updating of IEEE documents

Users of IEEE Standards documents should be aware that these documents may be superseded at any time by the issuance of new editions or may be amended from time to time through the issuance of amendments, corrigenda, or errata. An official IEEE document at any point in time consists of the current edition of the document together with any amendments, corrigenda, or errata then in effect. In order to determine whether a given document is the current edition and whether it has been amended through the issuance of amendments, corrigenda, or errata, visit the IEEE-SA Website at http://standards.ieee.org/index.html or contact the IEEE at the address listed previously. For more information about the IEEE Standards Association or the IEEE standards development process, visit IEEE-SA Website at http://standards.ieee.org/index.html.

Errata

Errata, if any, for this and all other standards can be accessed at the following URL: http://standards.ieee.org/findstds/errata/index.html. Users are encouraged to check this URL for errata periodically.

Patents

Attention is called to the possibility that implementation of this standard may require use of subject matter covered by patent rights. By publication of this standard, no position is taken by the IEEE with respect to the existence or validity of any patent rights in connection therewith. If a patent holder or patent applicant has filed a statement of assurance via an Accepted Letter of Assurance, then the statement is listed on the IEEE-SA Website at http://standards.ieee.org/about/sasb/patcom/patents.html. Letters of Assurance may indicate whether the Submitter is willing or unwilling to grant licenses under patent rights without

Published by IEC under license from IEEE. © 2013 IEEE. All rights reserved.
Documents
Document Sharing Hub
Authorized licensed use limited to: Tsinghua University. Downloaded on February 24,2026 at 13:00:55 UTC from IEEE Xplore. Restrictions apply.
Full document details: IEC/IEEE 1249-2013

compensation or under reasonable rates, with reasonable terms and conditions that are demonstrably free of any unfair discrimination to applicants desiring to obtain such licenses.

Essential Patent Claims may exist for which a Letter of Assurance has not been received. The IEEE is not responsible for identifying Essential Patent Claims for which a license may be required, for conducting inquiries into the legal validity or scope of Patents Claims, or determining whether any licensing terms or conditions provided in connection with submission of a Letter of Assurance, if any, or in any licensing agreements are reasonable or non-discriminatory. Users of this standard are expressly advised that determination of the validity of any patent rights, and the risk of infringement of such rights, is entirely their own responsibility. Further information may be obtained from the IEEE Standards Association.

Published by IEC under license from IEEE. © 2013 IEEE. All rights reserved.
Documents
Document Sharing Hub
Authorized licensed use limited to: Tsinghua University. Downloaded on February 24,2026 at 13:00:55 UTC from IEEE Xplore. Restrictions apply.
Full document details: IEC/IEEE 1249-2013

IEEE INTRODUCTION

This introduction is not part of IEEE Std 1249, Guide for Computer-Based Control for Hydroelectric Power Plant Automation

This document is a guide for the power industry for the automation of hydroelectric power plants using computer-based controls. The document was prepared by the Working Group on Computer-Based Control for Hydroelectric Power Plant Automation of the Hydroelectric Power Subcommittee of the Energy Development and Power Generation Committee of the IEEE Power and Energy Society (PES).

Automation of hydroelectric generating plants has been a proven technology for many years. However due to the relative simplicity of the control logic for hydroelectric power plants, the application of computer-based control on hydro power plants lagged, as compared to applications on thermal generating stations. With the advent of economic, computer-based control systems in the 1980s, installations of these systems in hydroelectric power plants has proceeded at a rapid pace worldwide, for both new installations and rehabilitation of control systems in existing plants. Since preparation of the original guide, significant changes in technology and application criteria have occurred. The purpose of this revision is to address these changes and to harmonize this guide with a companion document, IEEE Std 1010™, IEEE Guide for the Control of Hydroelectric Power Plants.

The guide is directed to the practicing engineer who has some familiarity with computer-based control systems. It contains references and definitions for use with the guide. Clauses addressing functional capabilities, software, security, system integration, system architecture, data bases, user and plant interfaces, system performance, back-up capabilities, support systems, testing and acceptance criteria and system management are contained in the guide.

Published by IEC under license from IEEE. © 2013 IEEE. All rights reserved.

Documents
Document Sharing Hub

Authorized licensed use limited to: Tsinghua University. Downloaded on February 24,2026 at 13:00:55 UTC from IEEE Xplore. Restrictions apply.

Full document details: IEC/IEEE 1249-2013

Published by IEC under license from IEEE. © 2013 IEEE. All rights reserved.

Documents
Document Sharing Hub

Authorized licensed use limited to: Tsinghua University. Downloaded on February 24,2026 at 13:00:55 UTC from IEEE Xplore. Restrictions apply.

Full document details: IEC/IEEE 1249-2013

GUIDE FOR COMPUTER-BASED CONTROL FOR HYDROELECTRIC POWER PLANT AUTOMATION

FOREWORD

1) The International Electrotechnical Commission (IEC) is a worldwide organization for standardization comprising all national electrotechnical committees (IEC National Committees). The object of IEC is to promote international co-operation on all questions concerning standardization in the electrical and electronic fields. To this end and in addition to other activities, IEC publishes International Standards, Technical Specifications, Technical Reports, Publicly Available Specifications (PAS) and Guides (hereafter referred to as "IEC Publication(s)"). Their preparation is entrusted to technical committees; any IEC National Committee interested in the subject dealt with may participate in this preparatory work. International, governmental and non-governmental organizations liaising with the IEC also participate in this preparation.

   IEEE Standards documents are developed within IEEE Societies and Standards Coordinating Committees of the IEEE Standards Association (IEEE-SA) Standards Board. IEEE develops its standards through a consensus development process, approved by the American National Standards Institute, which brings together volunteers representing varied viewpoints and interests to achieve the final product. Volunteers are not necessarily members of IEEE and serve without compensation. While IEEE administers the process and establishes rules to promote fairness in the consensus development process, IEEE does not independently evaluate, test, or verify the accuracy of any of the information contained in its standards. Use of IEEE Standards documents is wholly voluntary. IEEE documents are made available for use subject to important notices and legal disclaimers (see http://standards.ieee.org/IPR/disclaimers.html for more information).

   IEC collaborates closely with IEEE in accordance with conditions determined by agreement between the two organizations. This Dual Logo International Standard was jointly developed by the IEC and IEEE under the terms of that agreement.

2) The formal decisions of IEC on technical matters express, as nearly as possible, an international consensus of opinion on the relevant subjects since each technical committee has representation from all interested IEC National Committees. The formal decisions of IEEE on technical matters, once consensus within IEEE Societies and Standards Coordinating Committees has been reached, is determined by a balanced ballot of materially interested parties who indicate interest in reviewing the proposed standard. Final approval of the IEEE standards document is given by the IEEE Standards Association (IEEE-SA) Standards Board.

3) IEC/IEEE Publications have the form of recommendations for international use and are accepted by IEC National Committees/IEEE Societies in that sense. While all reasonable efforts are made to ensure that the technical content of IEC/IEEE Publications is accurate, IEC or IEEE cannot be held responsible for the way in which they are used or for any misinterpretation by any end user.

4) In order to promote international uniformity, IEC National Committees undertake to apply IEC Publications (including IEC/IEEE Publications) transparently to the maximum extent possible in their national and regional publications. Any divergence between any IEC/IEEE Publication and the corresponding national or regional publication shall be clearly indicated in the latter.

5) IEC and IEEE do not provide any attestation of conformity. Independent certification bodies provide conformity assessment services and, in some areas, access to IEC marks of conformity. IEC and IEEE are not responsible for any services carried out by independent certification bodies.

6) All users should ensure that they have the latest edition of this publication.

7) No liability shall attach to IEC or IEEE or their directors, employees, servants or agents including individual experts and members of technical committees and IEC National Committees, or volunteers of IEEE Societies and the Standards Coordinating Committees of the IEEE Standards Association (IEEE-SA) Standards Board, for any personal injury, property damage or other damage of any nature whatsoever, whether direct or indirect, or for costs (including legal fees) and expenses arising out of the publication, use of, or reliance upon, this IEC/IEEE Publication or any other IEC or IEEE Publications.

8) Attention is drawn to the normative references cited in this publication. Use of the referenced publications is indispensable for the correct application of this publication.

9) Attention is drawn to the possibility that implementation of this IEC/IEEE Publication may require use of material covered by patent rights. By publication of this standard, no position is taken with respect to the existence or validity of any patent rights in connection therewith. IEC or IEEE shall not be held responsible for identifying Essential Patent Claims for which a license may be required, for conducting inquiries into the legal validity or scope of Patent Claims or determining whether any licensing terms or conditions provided in connection with submission of a Letter of Assurance, if any, or in any licensing agreements are reasonable or non-discriminatory. Users of this standard are expressly advised that determination of the validity of any patent rights, and the risk of infringement of such rights, is entirely their own responsibility.

Published by IEC under license from IEEE. © 2013 IEEE. All rights reserved.

Documents
Document Sharing Hub

Authorized licensed use limited to: Tsinghua University. Downloaded on February 24,2026 at 13:00:55 UTC from IEEE Xplore. Restrictions apply.

Full document details: IEC/IEEE 1249-2013

International Standard IEC 62270/IEEE Std 1249 has been jointly revised by the Energy Development & Power Generation Committee of the IEEE Power & Energy Society, in cooperation with IEC technical committee 4: Hydraulic turbines, under the terms of that agreement.

This second edition cancels and replaces the first edition published in 2004. This edition constitutes a technical revision.

This edition includes the following significant technical changes with respect to the previous edition:

a) update of system architecture aspects, with different process control system configurations;
b) update of communications, user and plant interfaces aspects;
c) suppression of case studies, because of the quickness of evolution of the technology;
d) complete review of the bibliography, making mention of many IEC and IEEE standards as new references;
e) addition of a new informative Annex B on legacy control systems.

This publication is published as an IEC/IEEE Dual Logo standard.

The text of this standard is based on the following IEC documents:

FDIS	Report on voting
4/284/FDIS	4/287/RVD

Full information on the voting for the approval of this standard can be found in the report on voting indicated in the above table.

International standards are drafted in accordance with the rules given in the ISO/IEC Directives, Part 2.

The IEC Technical Committee and IEEE Technical Committee have decided that the contents of this publication will remain unchanged until the stability date indicated on the IEC web site under "http://webstore.iec.ch" in the data related to the specific publication. At this date, the publication will be

- reconfirmed,
- withdrawn,
- replaced by a revised edition, or
- amended.

IMPORTANT – The 'colour inside' logo on the cover page of this publication indicates that it contains colours which are considered to be useful for the correct understanding of its contents. Users should therefore print this document using a colour printer.

Published by IEC under license from IEEE. © 2013 IEEE. All rights reserved.

Documents
Document Sharing Hub

Authorized licensed use limited to: Tsinghua University. Downloaded on February 24,2026 at 13:00:55 UTC from IEEE Xplore. Restrictions apply.

Full document details: IEC/IEEE 1249-2013

GUIDE FOR COMPUTER-BASED CONTROL FOR HYDROELECTRIC POWER PLANT AUTOMATION

1 Overview

The automation of control and data logging functions has relieved the plant operator of these tasks, allowing the operator more time to concentrate on other duties. In many cases, the plant's operating costs can be significantly reduced by automation (primarily via staff reduction) while still maintaining or increasing the plant reliability.

Automatic control systems for hydroelectric units based on electromechanical relay logic have been in general use for many years and, in fact, were considered standard practice for the industry. Within the past few decades, microprocessor-based controllers have been developed that are suitable for operation in a power plant environment. These computer-based systems have been applied for data logging, alarm monitoring, and unit and plant control. Advantages of computer-based control include use of graphical user interfaces, the incorporation of sequence of events and trending and automatic archiving and reporting into the control system and the incorporation of artificial intelligence and expert system capabilities.

1.1 Scope

This guide addresses the application, design concepts, and implementation of computer-based control systems for hydroelectric plant automation. It addresses functional capabilities, performance requirements, interface requirements, hardware considerations, and operator training. It includes recommendations for system testing and acceptance. The electrical protective system (generator and step-up transformer) is beyond the scope of this guide.

1.2 Purpose

This guide is directed to the practicing engineer who has some familiarity with computer-based control systems and who is designing or implementing hydroelectric unit or plant control systems, either in a new project or as a retrofit to an existing one. Although this guide is aimed primarily towards large hydroelectric power plants, many of the concepts are applicable for small hydroelectric power plants (i.e. unit size 5 MVA or smaller). Further details on small hydroelectric power plant control concepts can be found in IEEE Std 1020™ [B46].[1, 2] Typical hydroelectric system control logic upon on which this guide is based can be found in companion guide IEEE Std 1010™ [B45] or IEC 61362 [B22].[3]

2 Terms and definitions

The terms and definitions provided here reflect common industry usage as related to automation of hydroelectric power plants, and may not in all instances be in accordance with IEEE Standards

---

1 IEEE publications are available from the Institute of Electrical and Electronics Engineers, 445 Hoes Lane, Piscataway, NJ 08854, USA (http://standards.ieee.org/).

2 The number in square brackets refer to the references listed in the bibliography in Annex A.

3 IEC publications are available from the Sales Department of the International Electrotechnical Commission, PO Box 131, 3 rue de Varembé, CH-1211, Genève 20, Switzerland/Suisse (http://www.iec.ch/). IEC publications are also available in the United States from the Sales Department, American national Standards Institute, 11 West 42nd Street, 13th Floor, New York, NY 10036, USA.

Published by IEC under license from IEEE. © 2013 IEEE. All rights reserved.
Documents Document Sharing Hub
Authorized licensed use limited to: Tsinghua University. Downloaded on February 24,2026 at 13:00:55 UTC from IEEE Xplore. Restrictions apply.
Full document details: IEC/IEEE 1249-2013

Dictionary Online[4] [B39], IEEE Std 610.12 [B41] or IEC 60050-351 [B2] or other applicable standards. For more rigorous terms and definitions, or for terms and definitions not covered herein, the reader is referred to the appropriate IEEE and IEC standards.

2.1 analog-to-digital (a/d) conversion
production of a digital output signal corresponding to the value of an analog input quantity

2.2 automatic control
an arrangement of electrical controls that provides for switching or controlling, or both, of equipment in a specific sequence and under predetermined conditions without operator intervention

2.3 automatic generation control (AGC)
the capability to regulate the power output of selectable units in response to total power plant output, tie-line power flow, and power system frequency

2.4 automatic voltage control (AVC)
the capability to regulate a specific power system voltage, via adjustment of unit excitation within the limits of unit terminal voltage and VAR capability

2.5 automation hierarchy
the design and implementation of automation functions in a multilevel structure, such as local level, group level, unit level, etc.

2.6 availability
the ratio of uptime (system functional) to uptime plus downtime (system not functional)

2.7 backplane
a circuit board with connectors or sockets that provides a standardized method of transferring signals between plug-in circuit cards

2.8 bridge
a device that allows two networks of the same or similar technology to communicate

2.9 centralized control
a control location one step removed from local control; remote from the equipment or generating unit, but still within the confines of the plant (e.g., controls located in a plant control room)

2.10 closed loop control
a type of automatic control in which control actions are based on signals fed back from the controlled equipment or system. For example, a plant control system can control the power output of a multi-unit hydroelectric power plant by monitoring the total plant megawatt value and, in turn controlling the turbine governor of each unit thus changing the plant power output to meet system needs. As a further example, plant control system can control the upstream or downstream reservoir water level by monitoring the water level measurement and in turn controlling the turbine governor of each unit or the position of each gate, changing the inflows or outflows to meet the water level set point.

[4] IEEE Standards Dictionary Online subscription is available at:
http://www.ieee.org/portal/innovate/products/standard/standards_dictionary.html.

Published by IEC under license from IEEE. © 2013 IEEE. All rights reserved.
Documents
Document Sharing Hub
Authorized licensed use limited to: Tsinghua University. Downloaded on February 24,2026 at 13:00:55 UTC from IEEE Xplore. Restrictions apply.
Full document details: IEC/IEEE 1249-2013

2.11 cold standby
a configuration consisting of two control processors arranged such that if a fault occurs on the master control processor, the slave (or second) control processor starts. There is an interruption in the processing operations between the fault on the master processor and the commencement of operation of the slave processor.

2.12 computer-based automation
the use of computer components, such as logic controllers, sequence controllers, personnel computers, or workstations or any kind of digital processor in order to bring plant equipment into operation, optimize operation in a steady-state condition, and shut down the equipment in the proper sequence under safe operating conditions

2.13 control hierarchy
a system organization incorporating multiple levels of control responsibility

2.14 control philosophy
the total concept on which a power plant control system is based

2.15 control processor
a device with CPUs, software, and interface bus which controls equipment in the proper sequence

2.16 data acquisition system
a system that receives data from one or more remote points. Data may be transported in either analog or digital form.

2.17 database
the collection of stored data regarding the process variables and processing procedures

2.18 data bus
a control network technology in which data stations share one single communication system medium. Messages propagate over the entire medium and are received by all data stations simultaneously.

2.19 device (electrical equipment)
an operating element such as a relay, contactor, circuit breaker, switch or valve, used to perform a given function in the operation of electrical equipment

2.20 digital-to-analog (d/a) conversion
production of an analog signal whose magnitude is proportional to the value of a digital input signal

2.21 distributed processing
a design in which data is processed in multiple processors. Processing functions could be shared by the processors throughout the control system.

2.22 event
a discrete change of state (status) of a system or device

2.23 expert system
computer programs that embody judgmental and experimental knowledge about an application. Expert systems are able to reach decisions from new, uncertain and incomplete information with a specified degree of certainty. Expert system abilities include; making logical inferences under

Published by IEC under license from IEEE. © 2013 IEEE. All rights reserved.
Documents
Document Sharing Hub
Authorized licensed use limited to: Tsinghua University. Downloaded on February 24,2026 at 13:00:55 UTC from IEEE Xplore. Restrictions apply.
Full document details: IEC/IEEE 1249-2013

unforeseen conditions; using subjective and formal knowledge; explaining the procedures used to reach a conclusion; growing in effectiveness as embedded expertise is expanded and modified.

2.24 firmware
hardware used for the nonvolatile storage of instructions or data that can be read only by the computer. Stored information is not alterable by any computer program.

2.25 gateway
a device that allows two networks of differing technology to communicate

2.26 hot standby
a configuration of two control processors, each with a dedicated central processing unit (CPU) and dedicated power supply, operated in a synchronous fashion with communications between the two processors whereby one takes over if then other fails, without interruption of the processing.

2.27 local control
for auxiliary equipment, controls that are located at the equipment itself or within sight of the equipment. For a generating station, the controls that are located on the unit switchboard/governor control station.

2.28 local control unit (LCU)
an independent and locally located computer-based function unit (as contrasted to a central control room) which include controller, I/Os and related application software to realize data acquisition and control functions to function based equipments of the hydropower plant such as generating units, plant auxiliaries, switchyard, dam/spillway etc.

2.29 logic (control or relay logic)
predetermined sequence of operation of relays and other control devices

2.30 manual control
control in which the system or main device, whether direct or power-aided in operation, is directly controlled by an operator

2.31 mean-time-between-failure (MTBF)
the time interval (hours) that may be expected between failures of an operating equipment

2.32 mean-time-to-repair (MTTR)
the time interval (hours) that may be expected to return a failed equipment to proper operation

2.33 modem
a modulator/demodulator device that converts serial binary digital data to and from the signal form appropriate for an analog communication channel

2.34 monitoring
a means of providing automatic performance supervision and alarming of the status of the process to personnel and control programs

2.35 offsite control
controls that are not resident at the plant (e.g., at a switchyard, another plant, etc.)

2.36 open loop control
a form of control without feedback

Published by IEC under license from IEEE. © 2013 IEEE. All rights reserved.
Documents
Document Sharing Hub
Authorized licensed use limited to: Tsinghua University. Downloaded on February 24,2026 at 13:00:55 UTC from IEEE Xplore. Restrictions apply.
Full document details: IEC/IEEE 1249-2013

2.37 proportional integral derivative (PID) [control system]
control action in which the output is proportional to a linear combination of the input, the time integral of input, and the time rate of change of input. Commonly used in hydroelectric applications for the control of a generator's active power (speed), and reactive power (voltage).

2.38 pixel
in image processing, the smallest element of a digital image that can be assigned a gray level or color.

2.39 programmable logic controller (PLC)
a digital electronic operating system, designed for use in an industrial environment, which uses a programmable memory for the internal storage of user-oriented instructions for implementing specific functions such as logic, sequencing, timing, counting and arithmetic, to control, through digital and analog inputs and outputs, various types of machines or processes. Both the PLC and its associated peripherals are designed so that they can be easily integrated into an industrial control system and easily used in all their intended functions.

2.40 protocol
a structured data format and a set of rules for the communication procedure required to initiate and maintain communication

2.41 relay, interposing
a device that enables the energy in a high-power circuit to be switched by a low power control signal

2.42 remote control
control of a device from a distant point

2.43 reliability
the characteristic of an item or system expressed by the probability that it will perform a required mission under stated conditions for a stated mission time

2.44 response time
the elapsed time between the moment when a signal is originated in an input device until the moment the corresponding processed signal is made available to the output device(s), under defined system loading conditions

2.45 resistance temperature detector (RTD)
a device for which the electrical resistivity is a known function of the temperature

2.46 scan (interrogation)
the process by which a data acquisition system sequentially interrogates remote stations for data at a specific frequency

2.47 scan cycle
the time in seconds required to obtain a collection of data (for example, all data from one controller, all data from all controllers, and all data of a particular type from all controllers)

2.48 serial communication
a method of transmitting information between devices by sending digital data serially over a single communication channel

Published by IEC under license from IEEE. © 2013 IEEE. All rights reserved.
Documents
Document Sharing Hub
Authorized licensed use limited to: Tsinghua University. Downloaded on February 24,2026 at 13:00:55 UTC from IEEE Xplore. Restrictions apply.
Full document details: IEC/IEEE 1249-2013

2.49 sequential control
a mode of control in which the control actions are executed consecutively

2.50 supervisory control and data acquisition (SCADA)
a system operating with coded signals over communication channels so as to provide control of equipment and to acquire information about the status of the equipment for display or for recording functions

2.51 user interface
a functional system used specifically to interface the computer-based control system to the operator, maintenance personnel, engineer, etc.

3 System architecture

3.1 General

System architecture defines the structures and relationships among the components of the hydroelectric power plant automation system, including its interface with the operational environment. Architecture includes hardware components, software components, configurations, networks, performance, reliability concepts, and maintainability of the automation system. Performance, reliability, and maintainability aspects of the system are covered in other chapters of this guide. These aspects of the system are dependent upon the system architecture. System architecture for a hydroelectric power plant should consider such factors as the number, size, and types of turbines and generators in the plant; whether the plant is generation-only or pumped storage; the plant's auxiliary systems, and whether or not the plant is designed for attended or unattended operation. A wide range of hardware components, networks, software components, and database alternatives are available to configure cost-effective architectures to meet the automation system's design goals. Open system architectures offer the advantages of ease of expansion, ability to accommodate changing technologies, and immunity to premature obsolescence. A detailed discussion of network system architecture is found in IEEE Std 1615 [B51] as well as the IEC 60870-5 series [B9] and IEC 61850 series [B23 through B33].

3.2 Process control system configurations

3.2.1 Basic configuration

Application of individual control processors, including, but not limited to a controller, RTUs (remote terminal units), and computers, for each of the main components of the power plant (i.e. generating units, plant auxiliaries, power plant intake, substation, etc.) should be considered. The main advantage of individual control processors is that a fault on one unit's control processor has no effect on the operation of the other units. Figure 1 shows a generic control system's configuration. Individual applications may include some or all components shown in the figure depending on plant size and importance. Time synchronization should be considered to identify the time within the system and any other subsystem in the plant all which should be connected to a central clock and be synchronized in an appropriate way.

Published by IEC under license from IEEE. © 2013 IEEE. All rights reserved.
Documents
Document Sharing Hub
Authorized licensed use limited to: Tsinghua University. Downloaded on February 24,2026 at 13:00:55 UTC from IEEE Xplore. Restrictions apply.
Full document details: IEC/IEEE 1249-2013

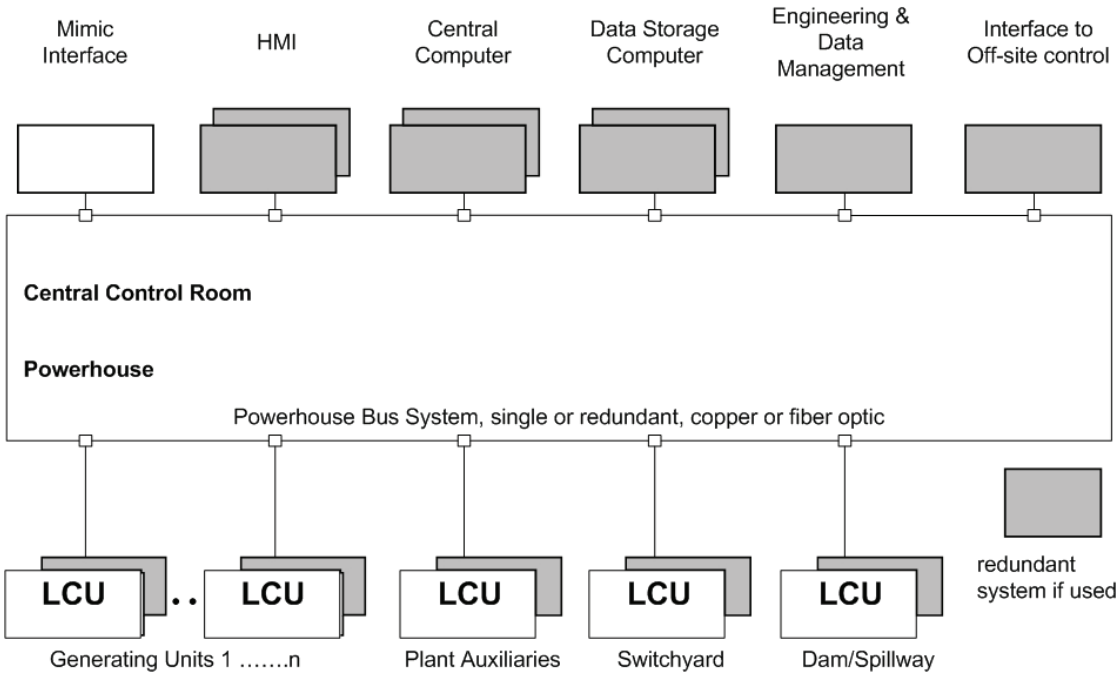

Figure 1 – Generic control system configuration

3.2.2 Control system configuration alternatives

3.2.2.1 Control system redundancy

Control processors/computers in a control system can be arranged in either single or redundant configurations. Control processors can be arranged in a single configuration without any back-up system. To improve the plant's reliability the single control processor can be equipped with hardware back-up (hardwired) systems to start and stop the units. Another alternative is to use a back-up control processor for mechanical protection and emergency control shut down. A traditional approach is installing one dedicated control processor for functions of sequence control, alarm and monitoring/mechanical protection and turbine governor control.

Requirements for safety concerning the equipment that perform safety functions such as unit protection or spillway control should be considered. The choice to implement redundant equipment and the extent of redundancy (sensors, inputs/outputs, processors, power supplies and/or hardwired systems to control the actuators) should be determined from studies aiming to match the requirements for availability and functional safety of electrical and electronic/programmable equipments to the safety-related systems.

Redundant control processors can be installed in automated control systems in a very cost effective manner. As a consequence, redundant concepts find application in control systems in hydroelectric power plants with high requirements for availability. Redundancy can be achieved in automated control systems through arrangements of either a cold standby configuration or a hot standby configuration. If application requirements deem a hot standby configuration appropriate, the configuration can be supplied with either single (common) or redundant input/output devices, power supplies, etc.

Published by IEC under license from IEEE. © 2013 IEEE. All rights reserved.
Documents Document Sharing Hub
Authorized licensed use limited to: Tsinghua University. Downloaded on February 24,2026 at 13:00:55 UTC from IEEE Xplore. Restrictions apply.
Full document details: IEC/IEEE 1249-2013

Regardless of whether the control processors should be redundant or not, many different ways of arranging the process controllers in the powerhouse exist. An example of a commonly used control configuration is shown below in 3.2.2.2.

3.2.2.2 Control system configuration with dedicated control processors

The system shown in Figure 2 represents a configuration where each main component of the power plant to be controlled has its own control processor. The main advantage of a system with dedicated control processors is that a fault on one unit's control processor has no effect on the operation of the other units. Each of the control processors and computers can be arranged redundantly to improve the system's availability, and may be equipped with a field bus and decentralized input/output modules. Depending on the number of auxiliaries supporting the unit and the distance to the LCU, a reduction in the number of cables and cable connections from the LCU to remote I/O cubicles can be realized.

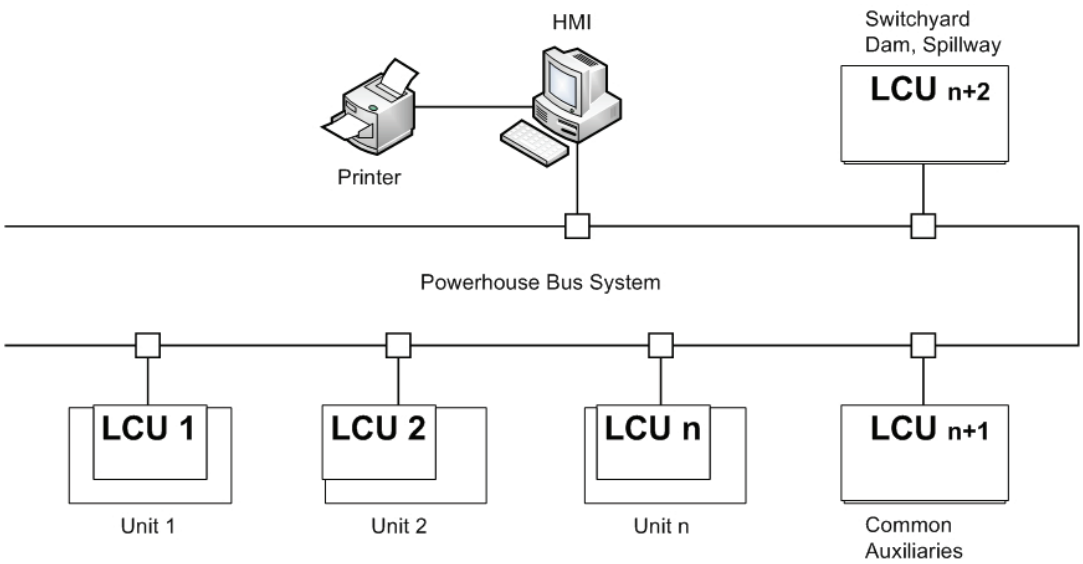

Figure 2 – System with dedicated unit control processors

3.3 System architecture characteristics

3.3.1 General

Any discussion of characteristics of system architectures for hydroelectric automation systems requires some basic understanding of the hierarchical structure of hydro power plant controls that has evolved through many years of practice. Concepts of location, mode of control, and supervision of control as it affects the control hierarchy are covered in subsequent subclauses.

3.3.2 Hierarchy

A general hierarchy of control for hydroelectric power plants is defined in IEEE Std 1010 [B45] or IEC 61362 [B22]. The combination of computer-based and noncomputer-based equipment used for unit, plant, and system control should be arranged in accordance with Table 1.

Published by IEC under license from IEEE. © 2013 IEEE. All rights reserved.
Documents
Document Sharing Hub
Authorized licensed use limited to: Tsinghua University. Downloaded on February 24,2026 at 13:00:55 UTC from IEEE Xplore. Restrictions apply.
Full document details: IEC/IEEE 1249-2013

Table 1 – Summary of control hierarchy for hydroelectric power plants

Control Category	Subcategory	Remarks
Location	Local	Control is local at the controlled equipment or within sight of the equipment.
	Centralized	Control is remote from the controlled equipment, but within the plant.
	Offsite	Control location is remote from the plant.
Mode	Manual	Each operation needs a separate and discrete initiation; could be applicable to any of the three locations.
	Automatic	Several operations are precipitated by a single initiation; could be applicable to any of the three locations.
Operation (Supervision)	Attended	Operator is available at all times to initiate control action.
	Unattended	Operation staff is not normally available at the project site.

Figure 3 (see 3.3.3) illustrates the arrangement of control locations, typical functions at each location, and typical interchange of control and operating information. Local control, centralized control, and offsite control functions are described in 3.5, 3.6 and 3.7.

A decision is required on the extent of functions to be included in the computer-based equipment. At one extreme, the computer-based equipment can incorporate all aspects of local, centralized, offsite, manual, and automatic control. At the other extreme, the computer-based equipment may handle only automatic unit sequences and data acquisition, with all other functions, such as local manual control, handled by non computer-based equipment.

Where provided, manual controls are used during testing, and maintenance, and as a backup to the automatic control equipment. Generally, manual controls are installed near the devices being controlled, such as pumps, compressors, valves, and motor control centres. Transfer of control to higher levels is accomplished by local-remote transfer switches installed at the equipment or similar functions provided in the computers and control processors of the automation system. Often, capability to operate individual items of equipment is also provided at the unit switchboard while in the local-manual mode. If this capability is designed to backup the computer-based equipment, then additional interposing relays and other devices will be required. Alternately, with the high reliability of contemporary computer equipment, local-manual operation from the unit switchboard can be incorporated into the computer controls, thereby reducing control complexity. In this case, direct manual operation may still be possible from the equipment location. Further backup control considerations are described in Clause 9.

For severe faults that require high-speed tripping of a unit, separate protective equipment is included in the unit control system. This protective equipment comprises relay-based, solid-state, or microprocessor-based protection for electrical and mechanical equipment and trip logic. These high-speed protective functions are generally not incorporated into the computer-based systems used for control due to the speed of operation of the control system hardware. Special purpose protective relays provide definite time of response to meet high-speed protection needs.

3.3.3 Control locations and levels

Contemporary hydro power plant control systems have different control levels and these levels can be at different locations. Figure 3 illustrates how more than one location of control may exist for a single piece of equipment.

Published by IEC under license from IEEE. © 2013 IEEE. All rights reserved.
Documents Document Sharing Hub
Authorized licensed use limited to: Tsinghua University. Downloaded on February 24,2026 at 13:00:55 UTC from IEEE Xplore. Restrictions apply.
Full document details: IEC/IEEE 1249-2013

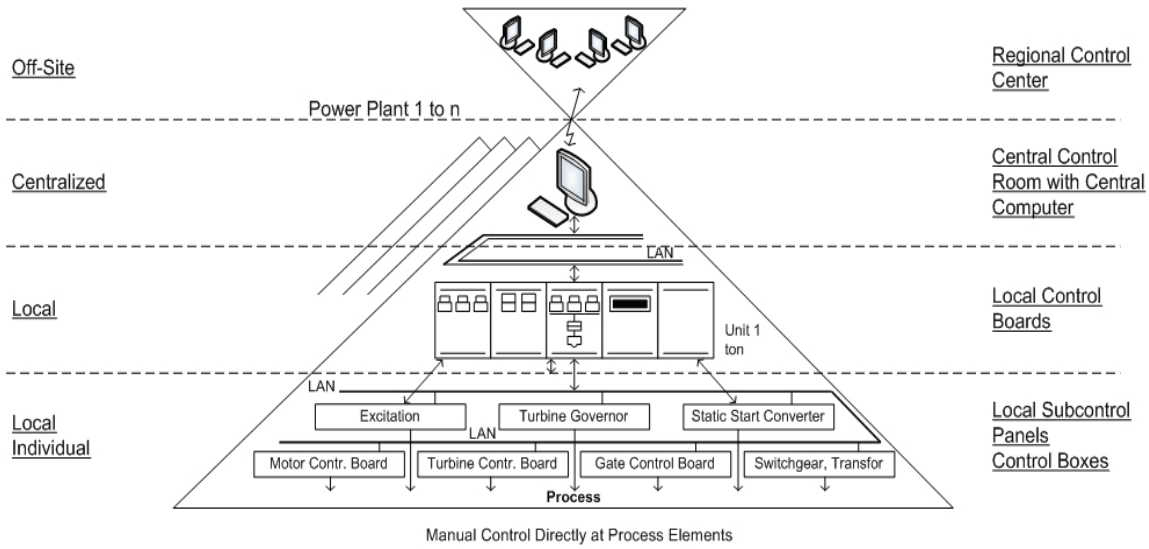

Figure 3 – Relationship of local, centralized and off-site control

3.3.4 Interface between the control system and the controlled process

Many faults on control systems are based on external malfunctioning of sensors and/or valves. This means such faults are usually caused by devices interfacing the control system with the process. Thus the interface between the control system and the process has to be as reliable as possible as well. This can be achieved by:

a) providing redundant sensors;

b) equipping solenoid operated valves with two self-latching coils;

c) providing important auxiliary systems like the governor or bearing oil pumps, compressors etc. with two AC pumps (main and standby pumps). If black-start is required one pump can be a DC pump;

d) providing circuit breakers with two tripping coils;

e) providing motor starters controlling motors and valves with self-sealing which means each valve, motor or circuit breaker receives two dedicated control signals, one for start/close and the other for stop/open. Faults on the control system do not influence the availability of the generating unit in operation because neither a start/close nor a stop/open signal is present. The process interface (motor, valve) remains in the same status as prior to the fault;

f) ensuring fail safe design (critical valves to open or to close in case of system fault);

g) providing redundant power sources for active devices.

3.4 Local individual control

Local individual control is mainly used for commissioning and maintenance purposes. If “local” individual control is being used in reference to the auxiliary equipment, it refers to the controls that are located close to the equipment itself or within sight of the equipment. Dedicated systems such as a sub control system for two governor pumps (main and stand-by pumps) with algorithms for automatic switch-over, oil pressure and level control, can be installed as decentralized input/output (I/O) equipment for the local control processor. Each control box or panel can be equipped with a control selector switch (local-remote). In principle, the selector switch nearest to the equipment being controlled has the highest priority that is if the selector switch next to the circuit breaker is in the “local” position, any remote, automatic, or manual, operation is disabled.

Published by IEC under license from IEEE. © 2013 IEEE. All rights reserved.
Documents
Document Sharing Hub
Authorized licensed use limited to: Tsinghua University. Downloaded on February 24,2026 at 13:00:55 UTC from IEEE Xplore. Restrictions apply.
Full document details: IEC/IEEE 1249-2013