IEC/IEEE 60214-2

Edition 2.0 2019-06

INTERNATIONAL STANDARD

TAP-changers –
Part 2: Application guidelines

IEC/IEEE 60214-2:2019-06(en)

Documents
Document Sharing Hub

Full document details: IEC/IEEE 60214-2-2019

THIS PUBLICATION IS COPYRIGHT PROTECTED
Copyright © 2019 IEC, Geneva, Switzerland
Copyright © 2019 IEEE

All rights reserved. Unless otherwise specified, no part of this publication may be reproduced or utilized in any form or by any means, electronic or mechanical, including photocopying and microfilm, without permission in writing being secured. Requests for permission to reproduce should be addressed to either IEC at the address below or IEC's member National Committee in the country of the requester or from IEEE.

IEC Central Office
3, rue de Varembé
CH-1211 Geneva 20
Switzerland
Tel.: +41 22 919 02 11
info@iec.ch
www.iec.ch

Institute of Electrical and Electronics Engineers, Inc.
3 Park Avenue
New York, NY 10016-5997
United States of America
stds.ipr@ieee.org
www.ieee.org

About the IEC
The International Electrotechnical Commission (IEC) is the leading global organization that prepares and publishes International Standards for all electrical, electronic and related technologies.

About the IEEE
IEEE is the world's largest professional association dedicated to advancing technological innovation and excellence for the benefit of humanity. IEEE and its members inspire a global community through its highly cited publications, conferences, technology standards, and professional and educational activities.

About IEC/IEEE publications
The technical content of IEC/IEEE publications is kept under constant review by the IEC and IEEE. Please make sure that you have the latest edition, a corrigendum or an amendment might have been published.

IEC publications search - webstore.iec.ch/advsearchform
The advanced search enables to find IEC publications by a variety of criteria (reference number, text, technical committee,…). It also gives information on projects, replaced and withdrawn publications.

IEC Just Published - webstore.iec.ch/justpublished
Stay up to date on all new IEC publications. Just Published details all new publications released. Available online and once a month by email.

IEC Customer Service Centre - webstore.iec.ch/csc
If you wish to give us your feedback on this publication or need further assistance, please contact the Customer Service Centre: sales@iec.ch.

Electropedia - www.electropedia.org
The world's leading online dictionary on electrotechnology, containing more than 22 000 terminological entries in English and French, with equivalent terms in 16 additional languages. Also known as the International Electrotechnical Vocabulary (IEV) online.

IEC Glossary - std.iec.ch/glossary
67 000 electrotechnical terminology entries in English and French extracted from the Terms and Definitions clause of IEC publications issued since 2002. Some entries have been collected from earlier publications of IEC TC 37, 77, 86 and CISPR.

Documents
Document Sharing Hub

Full document details: IEC/IEEE 60214-2-2019

IEC/IEEE 60214-2

Edition 2.0 2019-06

INTERNATIONAL STANDARD

TAP-changers –
Part 2: Application guidelines

INTERNATIONAL
ELECTROTECHNICAL
COMMISSION

ICS 29.180

IEEE: ISBN 978-1-5004-5846-7 STD23696
IEC: ISBN 978-2-8322-6722-6

Warning! Make sure that you obtained this publication from an authorized distributor.

® Registered trademark of the International Electrotechnical Commission

Documents
Document Sharing Hub

Full document details: IEC/IEEE 60214-2-2019

CONTENTS

FOREWORD 7
INTRODUCTION 10
1 Scope 11
2 Normative references 11
2.1 IEC references 11
2.2 IEEE references 12
3 Terms, definitions and abbreviated terms 12
3.1 Terms and definitions 12
3.2 Abbreviated terms 13
4 Use of normative references 13
5 Application of tap-changers for transformers and reactors 14
5.1 General 14
5.2 Typical circuits for regulation 14
5.3 Basic arrangements of tapped windings with on-load tap-changers 16
5.4 Basic arrangements of tapped windings with step-voltage regulator on-load tap-changers 17
5.5 Basic arrangements of tapped windings with de-energized tap-changers 17
5.5.1 Bridging contact scheme for DETC 17
5.5.2 Linear contact scheme for DETC 18
5.5.3 WYE (star) contact scheme for DETC 18
5.5.4 Most common basic arrangements for different combinations 18
6 Types of tap-changers 19
6.1 On-load tap-changers (OLTCs) 19
6.1.1 General 19
6.1.2 Principles of operation 20
6.1.3 Physical layouts 27
6.2 De-energized tap-changers (DETCs) 32
6.2.1 General 32
6.2.2 Types of DETC 32
6.2.3 Location of DETC in the transformer tank or enclosure 32
6.3 Tap-changer environment 34
6.3.1 Liquid immersed tap-changers 34
6.3.2 Dry-type tap-changers (OLTC and DETC) 35
6.3.3 Gas-immersed tap-changers (SF_6-insulated tap-changers) 36
6.4 Other types 38
6.4.1 General 38
6.4.2 Electronic tap-changers 38
6.4.3 Step-voltage regulators 38
6.4.4 Advance retard switch (ARS) 38
6.4.5 OLTCs for distribution transformers 39
7 On-load tap-changers 39
7.1 General 39
7.2 Selection of OLTCs 39
7.2.1 Basic parameters 39
7.2.2 Additional data 45
7.3 Application of OLTCs 45

AVA Documents
Document Sharing Hub

7.3.1 General ... 45
7.3.2 OLTCs for application in special transformers with non-sinusoidal currents (HVDC, rectifier transformers, converter transformers, etc.) ... 45
7.3.3 OLTCs for PSTs ... 46
7.3.4 OLTCs for arc furnace transformers ... 47
7.3.5 OLTCs for shunt reactors ... 47
7.3.6 OLTCs for series reactors ... 48
7.3.7 OLTCs for unit auxiliary transformers ... 48
7.3.8 OLTCs for railway supply transformers ... 48
7.3.9 Transformers and phases out-of-step condition ... 48
7.4 Other important parameters for OLTCs ... 49
7.4.1 Current wave shapes other than sinusoidal ... 49
7.4.2 Operating pressure ... 49
7.4.3 Operational life of breaking and making contacts ... 50
7.4.4 Tap-changer mechanical life ... 51
7.4.5 Motor-drive mechanism ... 51
7.4.6 Pressure and vacuum test ... 51
7.4.7 Temperature conditions ... 52
7.4.8 Overloading conditions ... 52
7.4.9 Continuous consecutive operations ... 53
7.4.10 Preventive autotransformer circuit (reactor type tap-changer only) ... 53
8 De-energized tap-changers ... 54
8.1 General ... 54
8.2 Selection of DETCs ... 54
8.2.1 Currents ... 54
8.2.2 Rated step voltage ... 55
8.2.3 Insulation level ... 55
8.2.4 Number of tap positions ... 55
8.3 Application of DETCs ... 55
8.3.1 General ... 55
8.3.2 Frequencies ... 55
8.3.3 Application involving non-sinusoidal currents (HVDCs, rectifier transformers, converter transformers, etc.) ... 56
8.3.4 DETCs for arc furnace transformers and other high load cycle applications ... 56
8.3.5 DETCs for peaking pulsing loads ... 56
8.4 Other important parameters for DETCs ... 56
8.4.1 Tap-changer mechanical life ... 56
8.4.2 Motor-drive ... 56
8.4.3 Paralleling de-energized tap-changers/current splitting ... 56
9 Protective devices for OLTCs ... 57
9.1 General ... 57
9.2 Increase of pressure within diverter or selector switch liquid compartments ... 58
9.2.1 General ... 58
9.2.2 Liquid flow controlled relay ... 58
9.2.3 Overpressure relay ... 58
9.2.4 Sudden pressure relay ... 59
9.2.5 Pressure relief device ... 59
9.3 Increase of pressure within a diverter or selector switch in SF_6 ... 59

AVA Documents
Document Sharing Hub
Full document details: IEC/IEEE 60214-2-2019

9.3.1 General ... 59
9.3.2 Pressure gauge (compound gauge) ... 59
9.3.3 Sudden pressure relay ... 60
9.4 Switching under excessive overload ... 60
9.5 Extreme medium temperatures ... 60
9.6 Increase of pressure within separate tap selector liquid compartments ... 60
9.6.1 General ... 60
9.6.2 Double element gas and liquid operated relay (Buchholz) ... 61
9.6.3 Overpressure relay ... 61
9.6.4 Pressure relief device ... 61
9.7 Tap-change supervisory circuit and phase unbalance protection ... 61
9.8 Vacuum interrupter monitoring system ... 62
10 Fittings and accessories for OLTCs ... 62
10.1 General ... 62
10.2 Valves, air release vents and liquid-sampling devices ... 62
10.3 Liquid-level gauges ... 62
10.4 Low liquid-level alarms ... 63
10.5 Dehydrating breathers ... 63
10.6 Oil filtering equipment ... 63
10.7 Devices to aid maintenance ... 63
10.8 Nameplate and other plates ... 63
11 Storage and installation of the tap-changer ... 64
11.1 Storage of OLTC and DETC when not in operation ... 64
11.1.1 General ... 64
11.1.2 Storage prior to installation ... 64
11.1.3 Storage after installation ... 64
11.2 Leads assembly to/at the tap-changer ... 65
11.3 Tap-changer mounting to the transformer tank ... 65
11.4 Processing and filling ... 66
11.5 Operation of OLTC for ratio measurement ... 66
12 Field service (operation, maintenance and monitoring) ... 67
12.1 Commissioning ... 67
12.1.1 General ... 67
12.1.2 Transformer ratio measurement ... 67
12.1.3 Tap-changer concerns during winding resistance measurement ... 68
12.1.4 Check of the synchronization of the drive system ... 68
12.1.5 General functional checks ... 69
12.2 Operation ... 69
12.2.1 Parallel operation ... 69
12.2.2 Contact erosion and liquid contamination ... 69
12.2.3 Overheating of contacts when operating in fixed tap position ... 70
12.2.4 Discharges during the operation of change-over selectors ... 71
12.3 Maintenance ... 71
12.3.1 General ... 71
12.3.2 Maintenance intervals ... 71
12.3.3 Performance of maintenance ... 71
12.3.4 Maintenance work ... 71
12.3.5 Contact resistance measurement ... 72
12.3.6 Motor-drives and shafts ... 72

AVA Documents
Document Sharing Hub

12.3.7 Accessories ... 72
12.4 Monitoring ... 72
12.4.1 General ... 72
12.4.2 Periodic monitoring ... 73
12.4.3 Continuous monitoring ... 75
12.4.4 Commercial monitoring systems ... 75
13 Safety ... 76
13.1 Gases ... 76
13.2 Operation of an on-load tap-changer ... 76
13.2.1 General ... 76
13.2.2 Overpressure protection ... 76
13.2.3 Pressure relief devices ... 76
13.3 Operation of de-energized tap-changers ... 76
13.3.1 General ... 76
13.3.2 Manual drive operation ... 77
13.3.3 Motor-drive operation ... 77
13.4 Immersing medium ... 78
14 Information to be provided by the transformer manufacturer ... 78
14.1 Information required at the enquiry or order stage for an OLTC ... 78
14.2 Information required at the enquiry or order stage for a DETC ... 80
14.2.1 General ... 80
14.2.2 Only for rack or slide-type design of DETC ... 80
14.2.3 Small DETCs ... 80
14.3 Documentation ... 81
Bibliography ... 82

Figure 1 – Tap-changers in a star-connected winding ... 14
Figure 2 – Tap-changers in series transformers ... 15
Figure 3 – Tap-changers in delta-connected windings ... 15
Figure 4 – Tap-changers in autotransformers ... 16
Figure 5 – Basic arrangements of the regulating winding ... 17
Figure 6 – Common connection arrangements ... 19
Figure 7 – Operating sequence of a diverter switch (d to i) and tap selector (a to c) (non-vacuum type diverter switch with operating cycle number 1) ... 21
Figure 8 – Operating sequence of a selector switch (a to e) (non-vacuum type selector switch with operating cycle number 1) ... 22
Figure 9 – Diagram of connections of non-vacuum, resistor type on-load tap-changers (IEC 60214-1:2014, Table A.1, or IEEE Std C57.131-2012, Table A.1) ... 22
Figure 10 – Diagram of connections of vacuum, resistor type on-load tap-changers (IEC 60214-1:2014, Table A.3) ... 24
Figure 11 – Operating sequence (a) to g)) of a diverter switch and tap selector (non-vacuum type) ... 26
Figure 12 – Diagram of connections of non-vacuum, reactor type on-load tap-changers (IEC 60214-1:2014, Annex B, or IEEE Std C57.131-2012, Annex B) ... 27
Figure 13 – Diagram of connections of reactor type on-load tap-changer with vacuum interrupter and tap selector (IEC 60214-1:2014, Annex B, or IEEE Std C57.131-2012, Annex B) ... 27
Figure 14 – Common layouts for compartment type tap-changers ... 29

AVA Documents
Document Sharing Hub
Full document details: IEC/IEEE 60214-2-2019

Figure 15 – Common layouts for in-tank-type tap-changers 31
Figure 16 – Common arrangements of DETCs in the transformer main tank 33
Figure 17 – Externally mounted diverter compartment with an in-tank tap selector and a barrier board 37
Figure 18 – ARS application and mode of operation in a PST 39
Figure 19 – Selector at both fine tap and coarse winding 44
Figure 20 – Tap-changer oil conservator arrangement 50
Figure 21 – Current splitting in DETCs 57
Figure 22 – Types of in-tank OLTC installations within the transformer 65

Documents
Document Sharing Hub

Full document details: IEC/IEEE 60214-2-2019

INTERNATIONAL ELECTROTECHNICAL COMMISSION

TAP-CHANGERS –

Part 2: Application guidelines

FOREWORD

1) The International Electrotechnical Commission (IEC) is a worldwide organization for standardization comprising all national electrotechnical committees (IEC National Committees). The object of IEC is to promote international co-operation on all questions concerning standardization in the electrical and electronic fields. To this end and in addition to other activities, IEC publishes International Standards, Technical Specifications, Technical Reports, Publicly Available Specifications (PAS) and Guides (hereafter referred to as "IEC Publication(s)"). Their preparation is entrusted to technical committees; any IEC National Committee interested in the subject dealt with may participate in this preparatory work. International, governmental and non-governmental organizations liaising with the IEC also participate in this preparation.

   IEEE Standards documents are developed within IEEE Societies and Standards Coordinating Committees of the IEEE Standards Association (IEEE-SA) Standards Board. IEEE develops its standards through a consensus development process, approved by the American National Standards Institute, which brings together volunteers representing varied viewpoints and interests to achieve the final product. Volunteers are not necessarily members of IEEE and serve without compensation. While IEEE administers the process and establishes rules to promote fairness in the consensus development process, IEEE does not independently evaluate, test, or verify the accuracy of any of the information contained in its standards. Use of IEEE Standards documents is wholly voluntary. *IEEE documents are made available for use subject to important notices and legal disclaimers (see* http://standards.ieee.org/IPR/disclaimers.html *for more information).*

   IEC collaborates closely with IEEE in accordance with conditions determined by agreement between the two organizations. This Dual Logo International Standard was jointly developed by the IEC and IEEE under the terms of that agreement.

2) The formal decisions of IEC on technical matters express, as nearly as possible, an international consensus of opinion on the relevant subjects since each technical committee has representation from all interested IEC National Committees. The formal decisions of IEEE on technical matters, once consensus within IEEE Societies and Standards Coordinating Committees has been reached, is determined by a balanced ballot of materially interested parties who indicate interest in reviewing the proposed standard. Final approval of the IEEE standards document is given by the IEEE Standards Association (IEEE-SA) Standards Board.

3) IEC/IEEE Publications have the form of recommendations for international use and are accepted by IEC National Committees/IEEE Societies in that sense. While all reasonable efforts are made to ensure that the technical content of IEC/IEEE Publications is accurate, IEC or IEEE cannot be held responsible for the way in which they are used or for any misinterpretation by any end user.

4) In order to promote international uniformity, IEC National Committees undertake to apply IEC Publications (including IEC/IEEE Publications) transparently to the maximum extent possible in their national and regional publications. Any divergence between any IEC/IEEE Publication and the corresponding national or regional publication shall be clearly indicated in the latter.

5) IEC and IEEE do not provide any attestation of conformity. Independent certification bodies provide conformity assessment services and, in some areas, access to IEC marks of conformity. IEC and IEEE are not responsible for any services carried out by independent certification bodies.

6) All users should ensure that they have the latest edition of this publication.

7) No liability shall attach to IEC or IEEE or their directors, employees, servants or agents including individual experts and members of technical committees and IEC National Committees, or volunteers of IEEE Societies and the Standards Coordinating Committees of the IEEE Standards Association (IEEE-SA) Standards Board, for any personal injury, property damage or other damage of any nature whatsoever, whether direct or indirect, or for costs (including legal fees) and expenses arising out of the publication, use of, or reliance upon, this IEC/IEEE Publication or any other IEC or IEEE Publications.

8) Attention is drawn to the normative references cited in this publication. Use of the referenced publications is indispensable for the correct application of this publication.

Documents
Document Sharing Hub

Full document details: IEC/IEEE 60214-2-2019

9) Attention is drawn to the possibility that implementation of this IEC/IEEE Publication may require use of material covered by patent rights. By publication of this standard, no position is taken with respect to the existence or validity of any patent rights in connection therewith. IEC or IEEE shall not be held responsible for identifying Essential Patent Claims for which a license may be required, for conducting inquiries into the legal validity or scope of Patent Claims or determining whether any licensing terms or conditions provided in connection with submission of a Letter of Assurance, if any, or in any licensing agreements are reasonable or non-discriminatory. Users of this standard are expressly advised that determination of the validity of any patent rights, and the risk of infringement of such rights, is entirely their own responsibility.

International Standard IEC/IEEE 60214-2 has been prepared by IEC technical committee 14: Power transformers, in cooperation with the Transformers Committee of the IEEE Power and Energy Society, under the IEC/IEEE Dual Logo Agreement between IEC and IEEE.

This publication is published as an IEC/IEEE Dual Logo standard.

This second edition cancels and replaces the first edition published in 2004. This edition constitutes a technical revision.

This edition includes the following significant technical changes with respect to the previous edition:

a) title has been updated from "Application guide" to "Application guidelines";
b) tap-changers for gas-filled transformers have been added;
c) description of typical circuits for regulation has been added;
d) description of basic arrangements of tapped windings with on-load tap-changers and de-energized tap-changers has been added;
e) types of tap-changers are explained in more detail (e.g. vacuum type on-load tap-changer) and new types have been added (e.g. step-voltage regulator, advance retard switch (ARS), on-load tap-changers for distribution transformers);
f) selection of tap-changers (on-load and de-energized) are described in more detail with respect to applications and parameters, which have to be considered (e.g. current wave shapes, operating pressure, temperature conditions, overloading conditions, continuous consecutive operations);
g) storage and installation has been considered;
h) field service, including commissioning, operation, maintenance and monitoring, has been considered;
i) safety aspects have been updated.

The text of this International Standard is based on the following IEC documents:

FDIS	Report on voting
14/1000/FDIS	14/1006/RVD

Full information on the voting for the approval of this International Standard can be found in the report on voting indicated in the above table.

International Standards are drafted in accordance with the rules given in the ISO/IEC Directives, Part 2.

A list of all parts in the IEC 60214 series, published under the general title *Tap-changers*, can be found on the IEC website.

Documents
Document Sharing Hub

Full document details: IEC/IEEE 60214-2-2019

The IEC Technical Committee and IEEE Technical Committee have decided that the contents of this publication will remain unchanged until the stability date indicated on the IEC website under "http://webstore.iec.ch" in the data related to the specific publication. At this date, the publication will be

- reconfirmed,
- withdrawn,
- replaced by a revised edition, or
- amended.

A bilingual version of this publication may be issued at a later date.

Documents
Document Sharing Hub

Full document details: IEC/IEEE 60214-2-2019

INTRODUCTION

The recommendations in these application guidelines represent advice to the tap-changer manufacturer, the transformer manufacturer, and the end user. When using these guidelines, the recommendations and instructions of the tap-changer manufacturer should prevail.

These guidelines apply to typical tap-changers currently in production at the time of publication. However, much of the information is applicable to older designs.

It is stressed that the responsibility for the correct application of the fully assembled tap-changers in connection with the transformer lies with the manufacturer of the transformer.

Documents
Document Sharing Hub

Full document details: IEC/IEEE 60214-2-2019

TAP-CHANGERS –

Part 2: Application guidelines

1 Scope

This part of IEC 60214 is intended to assist in the selection of tap-changers designed in accordance with IEC 60214-1 or IEEE Std C57.131 for use in conjunction with the tapped windings of transformers or reactors. Requirements, references and definitions relevant to either IEC 60214-1 or IEEE Std C57.131 are given and their use is described in Clause 4. It is also intended to assist in understanding the various types of tap-changers and their associated equipment available. These application guidelines cover on-load tap-changers (resistor and reactor types) and de-energized tap-changers.

2 Normative references

The following documents are referred to in the text in such a way that some or all of their content constitutes requirements of this document. For dated references, only the edition cited applies. For undated references, the latest edition of the referenced document (including any amendments) applies.

2.1 IEC references

IEC 60050-421, *International Electrotechnical Vocabulary (IEV) – Chapter 421: Power transformers and reactors* (available at www.electropedia.org)

IEC 60076-1:2011, *Power transformers – Part 1: General*

IEC 60076-3:2013, *Power transformers – Part 3: Insulation levels, dielectric tests and external clearances in air*

IEC 60076-5:2006, *Power transformers – Part 5: Ability to withstand short circuit*

IEC 60076-7, *Power transformers – Part 7: Loading guide for oil-immersed power transformers*

IEC 60076-11, *Power transformers – Part 11: Dry-type transformers*

IEC 60076-21, *Power transformers – Part 21: Standard requirements, terminology, and test code for step-voltage regulators*

IEC 60156, *Insulating liquids – Determination of the breakdown voltage at power frequency – Test method*

IEC 60214-1:2014, *Tap-changers – Part 1: Performance requirements and test methods*

IEC 60296, *Fluids for electrotechnical applications – Unused mineral insulating oils for transformers and switchgear*

IEC 60567, *Oil-filled electrical equipment – Sampling of gases and analysis of free and dissolved gases – Guidance*

Documents
Document Sharing Hub

Full document details: IEC/IEEE 60214-2-2019

IEC 60814, *Insulating liquids – Oil-impregnated paper and pressboard – Determination of water by automatic coulometric Karl Fischer titration*

2.2 IEEE references

ASTM D877 / D877M-2013, *Standard Test Method for Dielectric Breakdown Voltage of Insulating Liquids Using Disk Electrodes*

ASTM D1533, *Standard Test Method for Water in Insulating Liquids by Coulometric Karl Fischer Titration*

ASTM D3487, *Standard Specification for Mineral Insulating Oil Used in Electrical Apparatus*

IEEE Std C57.12.00™-2015, *IEEE Standard for General Requirements for Liquid-Immersed Distribution, Power, and Regulating Transformers*

IEEE Std C57.12.01™, *IEEE Standard for General Requirements for Dry-Type Distribution and Power Transformers*

IEEE Std C57.12.90™, *IEEE Standard Test Code for Liquid-Immersed Distribution, Power, and Regulating Transformers*

IEEE Std C57.15™, *Power transformers – Part 21: Standard requirements, terminology, and test code for step-voltage regulators*

IEEE Std C57.91™, *IEEE Guide for Loading Mineral-Oil-Immersed Transformers and Step-Voltage Regulators*

IEEE Std C57.131™-2012, *IEEE Standard Requirements for Tap Changers*

3 Terms, definitions and abbreviated terms

3.1 Terms and definitions

For the purposes of this document, the terms and definitions given in IEC 60050-421, IEC 60214-1 and IEC 60076-21 apply for IEC-specified tap-changers. For IEEE-specified tap-changers, the terms and definitions given in IEEE Std C57.131 and IEEE Std C57.15 apply. For all tap-changers, the following apply and take precedence.

ISO, IEC and IEEE maintain terminological databases for use in standardization at the following addresses:

- IEC Electropedia: available at http://www.electropedia.org/
- ISO Online browsing platform: available at http://www.iso.org/obp
- IEEE Dictionary Online: available at http://dictionary.ieee.org

3.1.1
mechanically linear
de-energized tap-changer, where the stationary contacts are arranged in a line (or series of lines) and the moving contacts operate in an inline manner to connect with the stationary contacts

Note 1 to entry: The definition only applies to the general operational characteristics of the switch, not to the type of contacts or actual operating mechanism.

Documents
Document Sharing Hub

Full document details: IEC/IEEE 60214-2-2019

3.1.2
mechanically rotary
de-energized tap-changer, where the stationary contacts are arranged along a circumference surrounding a central axis and the moving contacts operate in a rotational manner around that same central axis

Note 1 to entry: The definition only applies to the general operational characteristics of the switch, not to the type of contacts or actual operating mechanism.

3.1.3
fritting
electrically intimate metal-to-metal contact created by the dielectric breakdown of a very thin film of oil, oxides, sulfites, etc.

3.1.4
continuous consecutive operation
uninterrupted operation with the driving mechanism operating at its normal speed

3.2 Abbreviated terms

ARS	Advance retard switch
DETC	De-energized tap-changer
DGA	Dissolved and free gases analysis
EAF	Electrical arc furnace
GIC	Geomagnetic induced current
HV	High-voltage
HVDC	High-voltage direct current
IGBT	Insulated-gate bipolar transistor
LCSET	Lowest cold start energizing temperature (see IEC 60296)
LV	Low-voltage
OLTC	On-load tap-changer
PD	Partial discharge
PST	Phase-shifting transformer
VI	Vacuum interrupter
VSR	Variable shunt reactor

4 Use of normative references

This document can be used with either IEC or IEEE normative references but the references shall not be mixed. The purchaser shall include in the enquiry and order which normative references are to be used. If the choice of normative references is not specified, then IEC standards shall be used except for tap-changers intended for installation in North America where IEEE standards shall be used.

If only one alternative is given in a certain part of the document, i.e. only IEC reference(s) or only IEEE reference(s), then that/these reference(s) is/are valid independently of the choice of normative references.

Documents
Document Sharing Hub

Full document details: IEC/IEEE 60214-2-2019

5 Application of tap-changers for transformers and reactors

5.1 General

Tap-changers are devices that vary the active turns in a winding of a transformer or reactor. Tap-changers can perform this operation either on-load or with the transformer de-energized. Therefore, they can broadly be divided into two fundamental types as follows:

– on-load tap-changers;

– de-energized tap-changers.

When the operation of the tap-changer changes the excitation level of the device to which it is applied, then the volts per turn of all windings wound on the same core will change.

Tap-changers are used with all types of distribution and power transformers as well as with reactors. Also transformers for special applications (e.g. HVDC-transformers, phase-shifting transformers (PSTs), transformers for electrical arc furnace (EAF) applications) are equipped with tap-changers.

5.2 Typical circuits for regulation

Figure 1 shows a common winding arrangement for a typical star-connected winding with the regulating winding located at the neutral point. In those applications a compact three-phase tap-changer without a full insulation between phases can be used, when applicable.

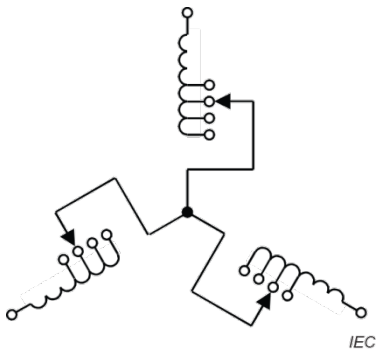

Figure 1 – Tap-changers in a star-connected winding

Series transformers (Figure 2) when applied to tap-changers are completely separate transformers or autotransformers used to trade off high current for increased voltage or high voltage for increased current. These devices, when applied, are supplied by and added to a larger main transformer where voltage regulation via an OLTC is needed. They are called series transformers because their output voltage is connected in series with the windings of the main transformer.

Documents
Document Sharing Hub
Full document details: IEC/IEEE 60214-2-2019

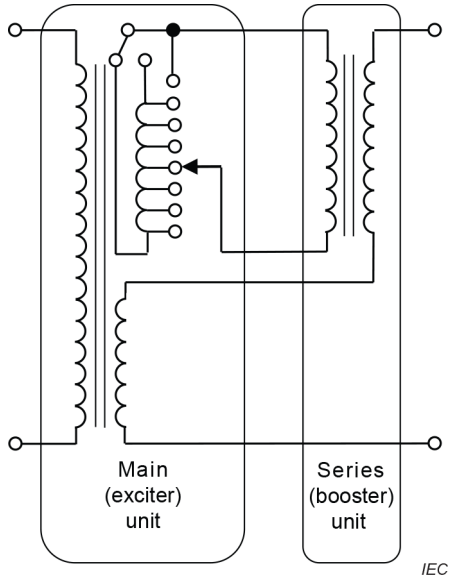

Figure 2 – Tap-changers in series transformers

Figure 3 a) to Figure 3 c) show the regulation in delta-connected windings. Figure 3 a) shows a winding arrangement where a three-phase tap-changer is needed with full insulation between phases dictated by the highest voltage for equipment U_m. The winding arrangement shown in Figure 3 c) allows the use of a tap-changer with reduced phase-to-phase insulation (around half of U_m). However, the insulation distance-to-ground shall be dimensioned for U_m because of the applied voltage test (AV) of the transformer (see IEC 60076-3:2013, Clause 10). If three-phase tap-changers of the required insulation level are not available, both above-mentioned arrangements can be used, of course, with three single-phase line-end tap-changers. When using a winding arrangement as shown in Figure 3 b), the number of tap-changer units can be reduced to two, a two-phase and a single-phase unit.

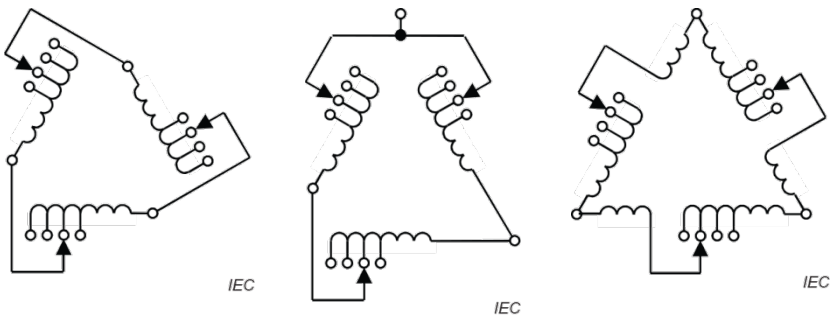

a)
Line-end arrangement

b)
Line-end arrangement with two units

c)
Mid-winding arrangement

Figure 3 – Tap-changers in delta-connected windings

Figure 4 shows winding arrangements for regulated autotransformers. The most appropriate arrangement is chosen depending on the regulating range, system conditions and/or weight and transportation restrictions.

Documents
Document Sharing Hub
Full document details: IEC/IEEE 60214-2-2019

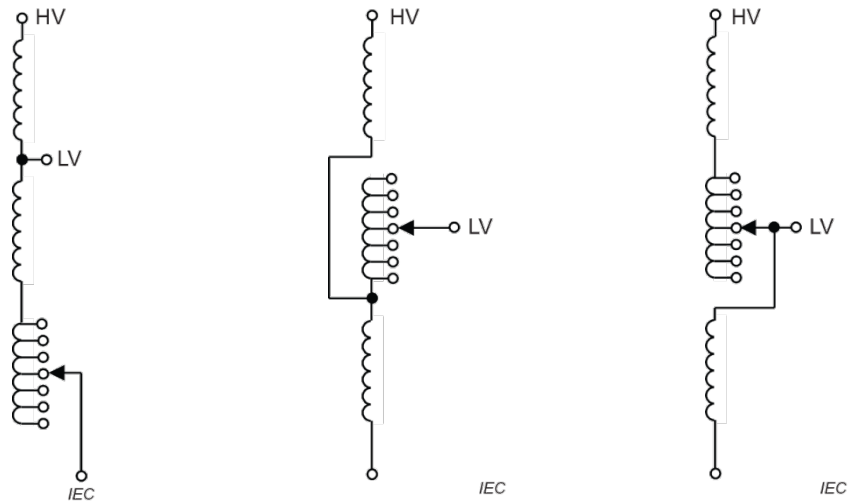

a) Neutral end arrangement **b) Common winding (LV) arrangement** **c) Series winding (HV) arrangement**

Figure 4 – Tap-changers in autotransformers

The arrangement in Figure 4 a) shows the tap-changer at the neutral end, which allows, with respect to its insulation, the use of a compact design with a three-phase neutral end tap-changer. Such an autotransformer is used to compensate voltage fluctuations either on the HV or on the LV; however, this arrangement always has variable flux taps.

Figure 4 b) shows an arrangement mainly to vary the LV of the transformer. Using this arrangement to compensate for voltage fluctuations on the LV leads to constant flux taps. The compensation of voltage fluctuations on the HV leads to variable flux taps. The situation changes when using an arrangement according to Figure 4 c). In this case, the constant flux taps exist with the compensation of HV and the variable flux taps of LV voltage fluctuations. Single-column, three-phase tap-changers with full insulation between phases according to the U_{m} of the LV or three single-column line-end tap-changers have to be used in applications shown in Figure 4 b) and Figure 4 c).

5.3 Basic arrangements of tapped windings with on-load tap-changers

Each of the Figures 1 to 4 only shows one exemplary arrangement (linear regulation) of the tapped windings. For all these examples, one of the following three basic arrangements of the regulating winding (Figure 5) can be used. Depending on the system and design parameters of the transformer application, any of these arrangements can be used.

Documents
Document Sharing Hub
Full document details: IEC/IEEE 60214-2-2019

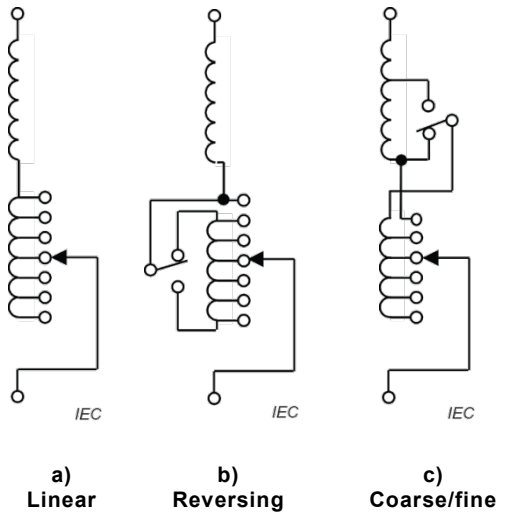

Figure 5 – Basic arrangements of the regulating winding

On power transformers, the linear connecting scheme (Figure 5 a)) is generally applied for a moderate regulating range up to typically 20 %. Industrial process transformers often work with a variable flux density and this scheme allows a variable number of turns between taps for optimum process control.

The regulating range can be approximately doubled by using a tap winding in conjunction with a change-over selector. A reversing change-over selector (Figure 5 b)) allows the tap winding to be connected in vectorial addition (boost) or subtraction (buck) to the main winding. Figure 5 c) shows a scheme with coarse and fine tap winding arrangements. The electrical length of the coarse winding is approximately the same as the fine tap winding. From the dielectric point of view this arrangement, however, requires a more sophisticated winding layout.

In the extreme "boost" position both regulating schemes with change-over selector show all windings in the circuit. In the extreme "buck" position, the reversing arrangement utilizes the main winding and the entire tap winding in the circuit, whereas the coarse/fine arrangement only utilizes the main winding, which furthermore has fewer turns. This leads to additional load losses with the reversing scheme when in buck tap-change position.

5.4 Basic arrangements of tapped windings with step-voltage regulator on-load tap-changers

See the latest edition of IEC 60076-21 or IEEE Std C57.15 for the different step-voltage regulator constructions such as:

– Type A,
– Type B,
– series transformer,
– equalizer winding.

5.5 Basic arrangements of tapped windings with de-energized tap-changers

5.5.1 Bridging contact scheme for DETC

The arrangement of the interaction of stationary and moving contacts on a DETC is such that the moving contact connects two of the stationary contacts per phase on the DETC (see Figure 6 a)). Multiple connections can be made providing a wide variety of connection options (see Figure 6 b)).

Documents
Document Sharing Hub
Full document details: IEC/IEEE 60214-2-2019

5.5.2 Linear contact scheme for DETC

The arrangement of the interaction of stationary and moving contacts on a DETC is such that the moving contact connects a desired stationary contact to an output terminal (see Figure 6 c) and Figure 6 d)).

5.5.3 WYE (star) contact scheme for DETC

The arrangement of the interaction of stationary and moving contacts on a DETC is such that the three simultaneously operated moving contacts (one for each phase) connect three desired stationary contacts (one for each phase) to the star point, with or without a common neutral output (see Figure 6 e)).

5.5.4 Most common basic arrangements for different combinations

The choice of an electrically bridging contact scheme, electrically linear contact scheme, or combinations of the schemes is defined by the specific winding connections required. Various mechanical arrangements of the DETC are available. The tap-changer manufacturers should be consulted for specific options.

Documents
Document Sharing Hub

Full document details: IEC/IEEE 60214-2-2019

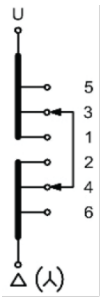

a)
Bridging contact scheme (1-Ph)

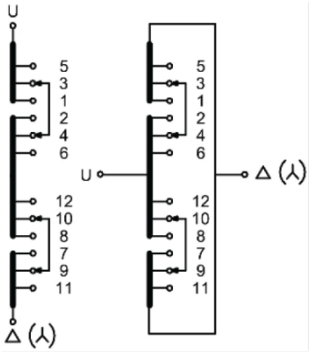

b)
Double bridging contact scheme (1-Ph)

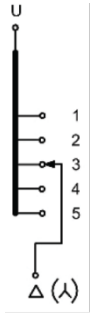

c)
Linear contact scheme (1-Ph)

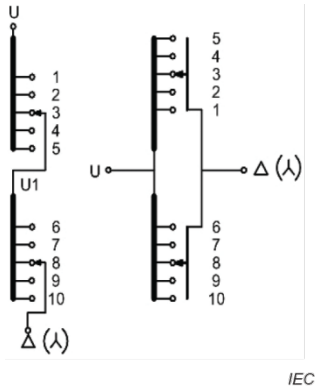

d)
Double linear contact schemes (1-Ph)

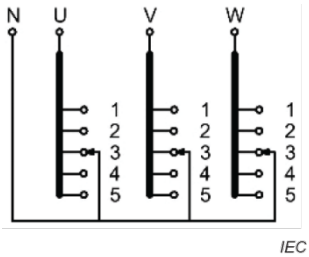

e)
WYE (Star) contact scheme (3-Ph)

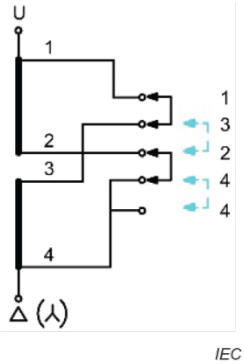

f)
Series/parallel contact scheme (1-Ph)

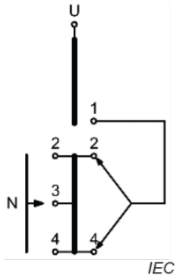

g)
Linear contact scheme with polarity inversion (1-Ph)

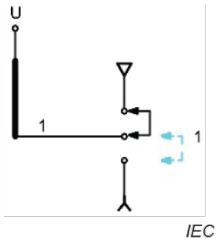

h)
Delta/star contact scheme (1-Ph)

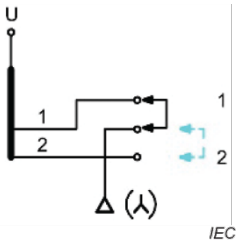

i)
Exclusion of turns contact scheme (1-Ph)

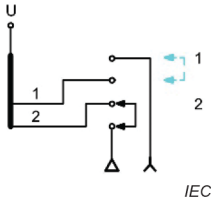

k)
Delta/star contact scheme with exclusion of turns (1-Ph)

Figure 6 – Common connection arrangements

6 Types of tap-changers

6.1 On-load tap-changers (OLTCs)

6.1.1 General

The on-load tap-changer is designed to change tap connections while the transformer/reactor is both energized and on load. It performs this function without any interruption of the load. This is achieved with the mechanically operated components of the OLTC.

Documents
Document Sharing Hub
Full document details: IEC/IEEE 60214-2-2019

On-load tap-changing can be employed by using various switching principles.

The two most common switching principles can be distinguished by means of the transition impedance:

– resistor type switching, using a resistor as transition impedance (see 6.1.2.1);
– reactor type switching, using a reactor (preventive autotransformer) as transition impedance (see 6.1.2.2).

Furthermore, in reactor type tap-changers, both tap selector arms and both sides of the diverter switch are carrying the through-current in parallel in the service positions, whereas in resistor type tap-changers only one tap selector arm and one side of the diverter switch carries the through-current. This allows for reactor type tap-changers to use the position with the two tap selector arms connected to two adjacent taps (bridging position, IEC 60214-1:2014, 3.21) as well as the position with the tap selector arms connected to the same tap (non-bridging position, IEC 60214-1:2014, 3.22) as a service position. In resistor type tap-changers, the position between two taps is only a passage position. Therefore, the regulating winding for reactor type tap-changers needs only half as many taps to gain the same number of positions.

Traditionally, in the USA where tap-changers have been applied at the neutral end of the low-voltage windings, reactor tap-changers have been dominant. Conversely, elsewhere where tap-changers have frequently been applied to the high-voltage windings, resistance tap-changers have been dominant.

Both on-load tap-changer switching principles are available as non-vacuum type and vacuum type tap-changers.

Non-vacuum type tap-changers are equipped with contacts which break and make the load and circulating currents in liquid or gas. The arcing takes place within the same medium which is used as the insulation medium (and in case of liquids also as the lubrication medium) and causes a degradation of the medium.

Vacuum type tap-changers are not completely under vacuum, but they are equipped with vacuum interrupters (VIs) which break and make the load and circulating currents. However, the VI housing is sealed and therefore the degradation of the surrounding medium is minimized.

6.1.2 Principles of operation

6.1.2.1 Resistor types

6.1.2.1.1 General

Resistor type OLTCs are realized either as devices with a diverter switch (see IEC 60214-1:2014, 3.5, or IEEE Std C57.131-2012, Clause 3) and tap selector (see IEC 60214-1:2014, 3.4, or IEEE Std C57.131) or as selector switches (IEC 60214-1:2014, 3.6, or IEEE Std C57.131-2012, Clause 3). Such devices can be designed as:

– non-vacuum type on-load tap-changer (see 6.1.2.1.2);
– vacuum type on-load tap-changer (see 6.1.2.1.3).

In the diverter switch and tap selector concept, the switching operation is carried out by the positioning of the tap selector followed by the movement of the diverter switch. The basic mode of operation is exemplified in Figure 7 for a non-vacuum type diverter switch and tap selector utilizing operating cycle number 1 (according to IEC 60214-1). The tap selector is equipped with two independently movable contact decks. At first, that contact deck, which is not carrying the through-current, is actuated directly by the motor-drive mechanism. The tap adjacent to the tap in service will be pre-selected without any breaking or making of current (see Figures 7 a) to c)) in a time span of some seconds. Then, the diverter switch transfers

Documents
Document Sharing Hub

the load current from the tap in service to the pre-selected one in a time span of around 50 ms to 150 ms (see Figure 7 d) to Figure 7 i)). This action is actuated in most designs by a spring-loaded energy accumulator, which will be wound up during the tap selector operation and will be mechanically released when the tap selector operation is finished. For this load transfer, the diverter switch of a non-vacuum type is equipped with main switching and transition contacts made from copper or copper-tungsten alloys.

This concept of two consecutive steps of the tap selector and the diverter switch is used for non-vacuum as well as for vacuum type diverter switch and tap selector designs. In vacuum type tap-changers the main switching and transition contacts are replaced by vacuum interrupters.

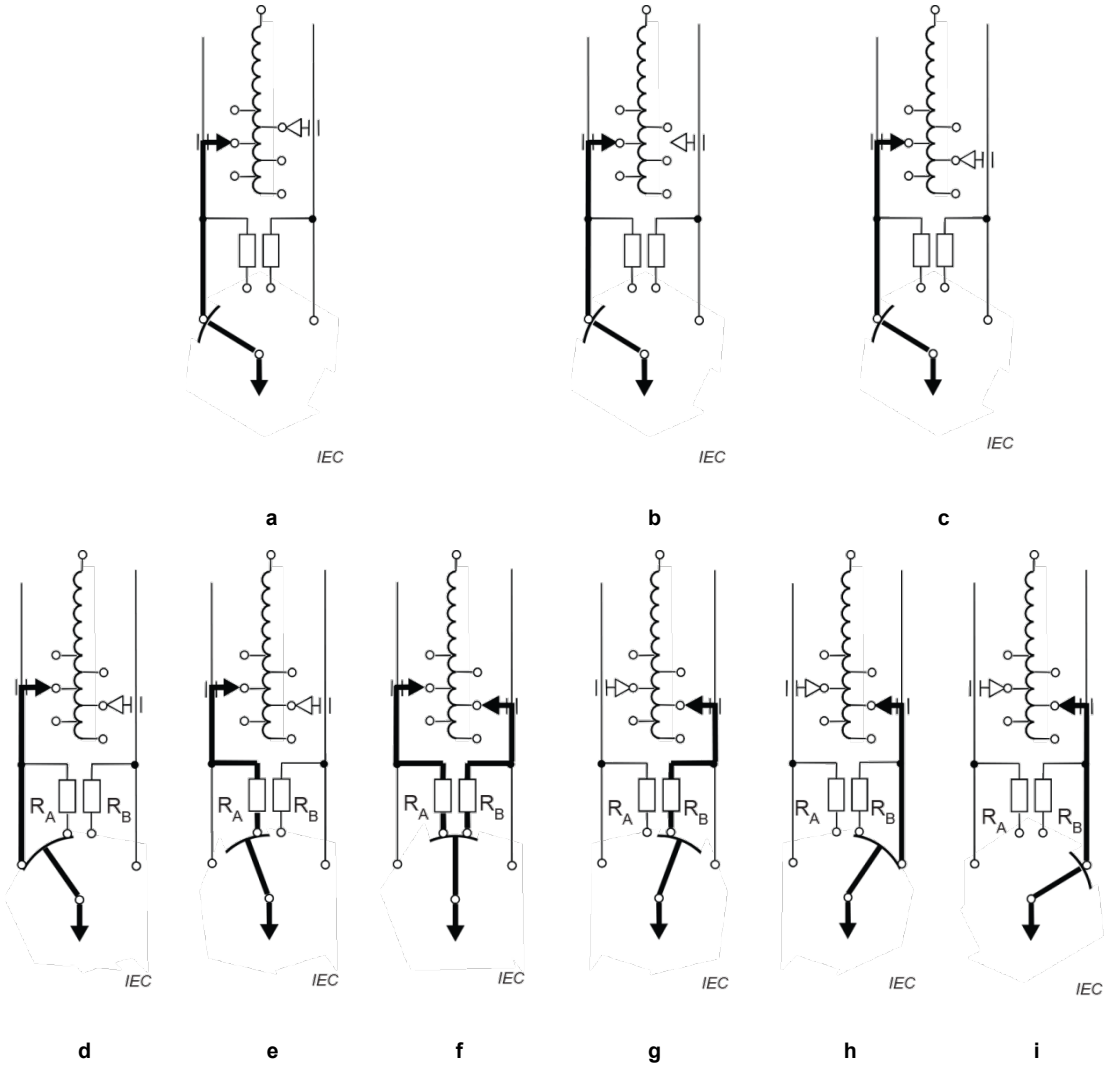

Figure 7 – Operating sequence of a diverter switch (d to i) and tap selector (a to c) (non-vacuum type diverter switch with operating cycle number 1)

The selector switch concept combines the aforementioned two moves of operation in one movement, in one device. Figure 8 exemplifies the operation order of contacts for a non-vacuum type selector switch utilizing operating cycle number 1 (see IEC 60214-1).

Documents
Document Sharing Hub
Full document details: IEC/IEEE 60214-2-2019

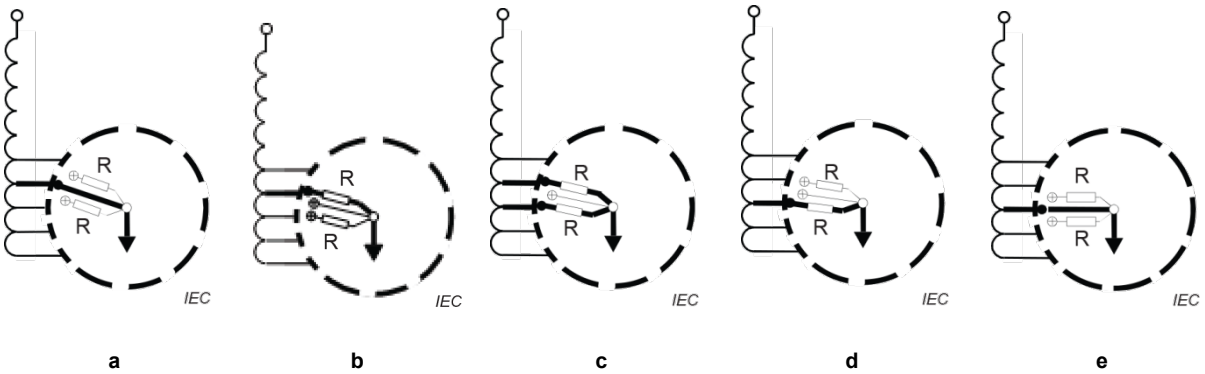

Figure 8 – Operating sequence of a selector switch (a to e)
(non-vacuum type selector switch with operating cycle number 1)

6.1.2.1.2 Non-vacuum types

6.1.2.1.2.1 General

Non-vacuum type OLTCs with the resistor switching principle according to IEC 60214-1:2014, 3.2, mostly operate utilizing one of the following three basic switching modes:

1) diverter switch (Figure 9 a)) or selector switch (Figure 9 b)) utilizing operating cycle number 1, formerly known as "flag cycle" operation (6.1.2.1.2.2);
2) diverter switch (Figure 9 a)) utilizing operating cycle number 2, formerly known as "symmetrical pennant cycle" operation (6.1.2.1.2.3);
3) selector switch (Figure 9 c)) utilizing operating cycle number 2, formerly known as "asymmetrical pennant cycle" operation (6.1.2.1.2.4).

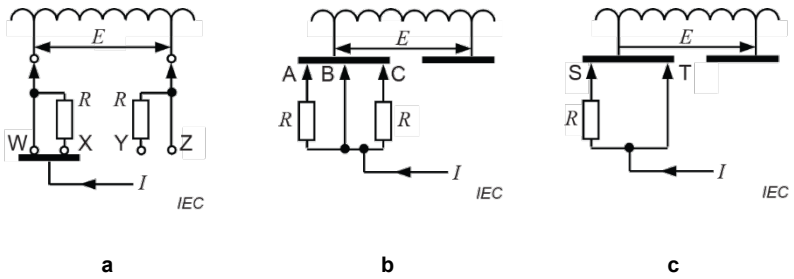

Figure 9 – Diagram of connections of non-vacuum, resistor type on-load tap-changers
(IEC 60214-1:2014, Table A.1, or IEEE Std C57.131-2012, Table A.1)

The formerly used designations "flag cycle", "symmetrical pennant cycle" and "asymmetrical pennant cycle" arise from the appearance of the vector diagrams showing the change in output voltage of the transformer in moving from one tap position to the adjacent one (see IEC 60214-1:2014, Figure A.1, or IEEE Std C57.131-2012, Figure A.1).

6.1.2.1.2.2 Diverter or selector switch with operating cycle number 1 (formerly known as flag cycle)

Figure 9 a) and Figure 9 b) show the diagrams of connections of these designs, which minimally incorporate diverter switch or selector switch main switching contacts (W and Z, B), diverter switch and selector switch transition contacts (X and Y, A and C) and two transition resistors (R). The step voltage is indicated with E.

Documents
Document Sharing Hub
Full document details: IEC/IEEE 60214-2-2019

A tap-change operation is performed by diverting the through-current from the main switching contacts before the circulating current starts to flow; this mode of operation can be referred to as "break-before-make operation" according to the contact operating order.

NOTE This cycle calls for a through-current connection being at the midpoint of the transition impedance when it is carrying the circulating current.

The order of contacts as well as the duty of the main switching and transition contacts is described in detail in IEC 60214-1:2014, Figure A.1a and Tables A.1 and A.2, or IEEE Std C57.131-2012, Figure A.1 and Tables A.1 and A.2.

6.1.2.1.2.3 Diverter switch with operating cycle number 2 (formerly known as symmetrical pennant cycle)

This design consists of the same elements as described in 6.1.2.1.2.2 and uses the same diagram of connections (Figure 9 a)).

In tap-change operations following this operating cycle, the circulating current starts to flow before diverting the through-current from the main switching contacts; this mode of operation can be referred to as "make-before-break operation" according to the contact operating order.

NOTE This cycle calls for a through-current connection being at the midpoint of the transition impedance when it is carrying the circulating current.

The order of contacts as well as the duty of the main switching and transition contacts is described in detail in IEC 60214-1:2014, Figure A.1b and Tables A.1 and A.2, or IEEE Std C57.131-2012, Figure A.2 and Tables A.1 and A.2.

6.1.2.1.2.4 Selector switch with operating cycle number 2 (formerly known as asymmetrical pennant cycle)

The diagram of connections of this design is shown in Figure 9 c), which usually incorporates a selector switch main switching contact (T), a selector switch transition contact (S) and one transition resistor (R).

Tap-change operations following this operating cycle use the two above-mentioned methods (6.1.2.1.2.2, 6.1.2.1.2.3) depending on the direction of movement. In one direction, the circulating current starts to flow before the through current is diverted from the main switching contacts ("make-before-break operation"), while in the opposite direction of movement, the through-current is diverted before the circulating current starts to flow ("break-before-make operation").

NOTE 1 This cycle calls for a through-current connection being at one end of the transition impedance when this is carrying the circulating current.

NOTE 2 Non-vacuum type tap-changers employing the selector switch operating cycle number 2 are often used with load flow in one direction only.

The order of contacts as well as the duty of the main switching and transition contacts is described in detail in IEC 60214-1:2014, Figure A.1c and Tables A.1 and A.2, or IEEE Std C57.131-2012, Figure A.3 and Tables A.1 and A.2.

6.1.2.1.3 Vacuum types

6.1.2.1.3.1 General

Vacuum type OLTCs with the resistor switching principle according to IEC 60214-1:2014, 3.3, mostly operate utilizing the following basic switching modes:

– diverter switch with one transition resistor and two vacuum interrupters (Figure 10 a)) utilizing operating cycle number 1 or number 2 (see 6.1.2.1.3.2);

Documents
Document Sharing Hub

Full document details: IEC/IEEE 60214-2-2019

– selector switch with one transition resistor and two vacuum interrupters (Figure 10 b)) utilizing operating cycle number 1 (see 6.1.2.1.3.3);

– diverter switch with two transition resistors and three vacuum interrupters (Figure 10 c)) utilizing operating cycle number 1 or number 2 (see 6.1.2.1.3.4);

– selector switch with two transition resistors and three vacuum interrupters (Figure 10 d)) utilizing operating cycle number 1 (see 6.1.2.1.3.5);

– diverter switch with two transition resistors and four vacuum interrupters utilizing operating cycle number 1 or 2 of the non-vacuum type diverter switches (see 6.1.2.1.3.6).

NOTE 1 The operating cycles number 1 and 2 according to IEC 60214-1 are defined differently for diverter and selector switches of the several designs.

NOTE 2 While the configurations/designs mentioned 6.1.2.1.3.1 are specifically noted in IEC 60214-1, other options are certainly possible.

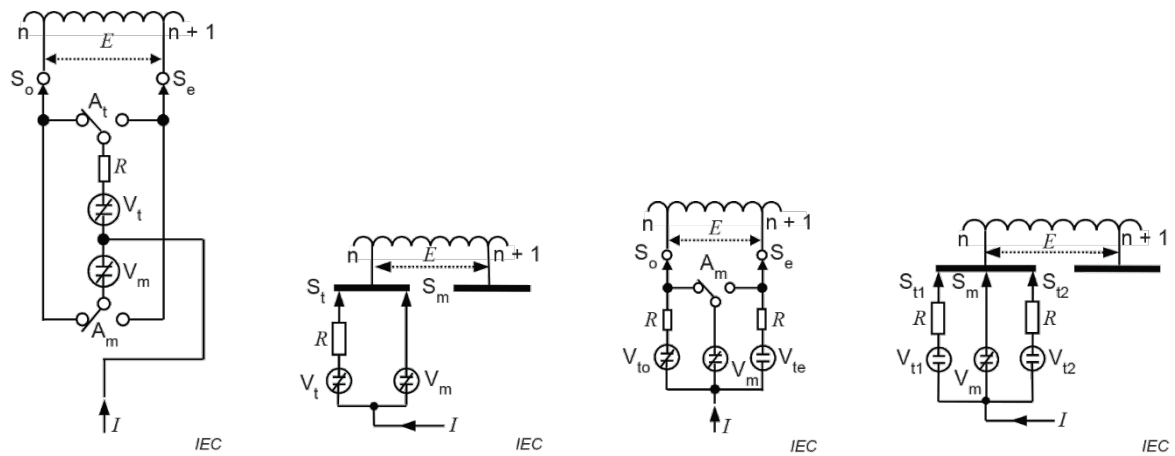

a b c d

Figure 10 – Diagram of connections of vacuum, resistor type on-load tap-changers (IEC 60214-1:2014, Table A.3)

6.1.2.1.3.2 Diverter switch with one transition resistor and two vacuum interrupters utilizing operating cycle number 1 or number 2

This diverter switch design (Figure 10 a)) usually incorporates one transition resistor (R), one vacuum interrupter acting as main switching contact (V_m), one vacuum interrupter acting as transition contact (V_t) and at least two auxiliary contacts (auxiliary transfer switches A_m, A_t).

The diverter switch operation of operating cycle number 1 is performed by diverting the through-current from the main switching vacuum interrupter before the circulating current starts to flow; this mode of operation is also called "break-before-make operation" according to the switching element operating order and is similar to the flag cycle.

The same design can be used to perform diverter switch operations according to operation cycle number 2. Here, the circulating current starts to flow before diverting the through-current from the main switching vacuum interrupter; this mode of operation is also called "make-before-break operation" according to the switching element operating order and is similar to the pennant cycle.

NOTE These cycles call for the path with the main switching vacuum interrupter as well as the path with the transition vacuum interrupter each to be equipped with at least one auxiliary transfer contact.

The order of switching elements as well as the duty of the main switching and transition contact vacuum interrupter is described in detail in IEC 60214-1:2014, Table A.3.

Documents
Document Sharing Hub
Full document details: IEC/IEEE 60214-2-2019

6.1.2.1.3.3 Selector switch with one transition resistor and two vacuum interrupters utilizing operating cycle number 1

This selector switch design (Figure 10 b)) usually incorporates one transition resistor (R), one vacuum interrupter acting as main switching contact (V_m) and one vacuum interrupter acting as transition contact (V_t). This selector switch design needs no auxiliary transfer contact, but two selector contacts (S_m, S_t).

The selector switch operation is performed in one switching direction by diverting the through-current from the main switching vacuum interrupter before the circulating current starts to flow ("break-before-make operation"). In the opposite direction the through-current will be diverted from the main switching vacuum interrupter after the circulating current started to flow ("make before break operation"). This operation is similar to the asymmetrical pennant cycle.

The operation order of switching elements as well as the duty of main switching vacuum interrupter and transition contact vacuum interrupter is described in detail in IEC 60214-1:2014, Table A.3.

6.1.2.1.3.4 Diverter switch with two transition resistors and three vacuum interrupters utilizing operating cycle number 1 or number 2

This diverter switch design (Figure 10 c)) usually incorporates two transition resistors (R), one vacuum interrupter acting as main switching contact (V_m), two vacuum interrupters acting as transition contact (V_{to}, V_{te}) and at least one auxiliary contact (auxiliary transfer switch A_m).

The description of the diverter switch operations can be taken from 6.1.2.1.3.2.

6.1.2.1.3.5 Selector switch with two transition resistors and three vacuum interrupters utilizing operating cycle number 1

This selector switch design (Figure 10 d)) usually incorporates two transition resistors (R), one vacuum interrupter acting as main switching contact (V_m) and two vacuum interrupters acting as transition contact (V_{t1}, V_{t2}). This selector switch design needs no auxiliary transfer contact, but three contacts acting as tap selector (S_m, S_{t1}, S_{t2}).

The selector switch operation is performed by diverting the through-current from the main switching vacuum interrupter before the circulating current starts to flow; this mode of operation is also called "break before make operation" according to the switching element operating order.

The order of switching elements as well as the duty of the main switching vacuum interrupter and transition contact vacuum interrupter is described in detail in IEC 60214-1:2014, Table A.3.

6.1.2.1.3.6 Diverter switch with two transition resistors and four vacuum interrupters utilizing operating cycle number 1 or 2 of the non-vacuum type diverter switches

This diverter switch design (similar to Figure 9 a); contacts W, X, Y and Z are replaced by vacuum interrupters) usually incorporates two transition resistors, two vacuum interrupters acting as main switching contact, two vacuum interrupters acting as transition contact and does not necessarily need an auxiliary transfer contact. The method to perform the tap-change operation is very close to that of the non-vacuum diverter switch utilizing operating cycle number 1 or 2.

The description of the diverter switch operations can be taken from 6.1.2.1.2.2 in case of operating cycle number 1 and from 6.1.2.1.2.3 for operating cycle number 2.

Documents
Document Sharing Hub

Full document details: IEC/IEEE 60214-2-2019