IEC/IEEE 62582-5

Edition 1.0 2015-06

INTERNATIONAL STANDARD

NORME INTERNATIONALE

colour inside

Nuclear power plants – Instrumentation and control important to safety – Electrical equipment condition monitoring methods – Part 5: Optical time domain reflectometry

Centrales nucléaires de puissance – Instrumentation et contrôle-commande importants pour la sûreté – Méthodes de surveillance de l'état des matériels électriques – Partie 5: Technique de rétrodiffusion

IEC/IEEE 62582-5:2015-06(en-fr)

AVA Documents
Document Sharing Hub

Full document details: IEC/IEEE 62582-5-2015

THIS PUBLICATION IS COPYRIGHT PROTECTED
Copyright © 2015 IEC, Geneva, Switzerland
Copyright © 2015 IEEE

All rights reserved. Unless otherwise specified, no part of this publication may be reproduced or utilized in any form or by any means, electronic or mechanical, including photocopying and microfilm, without permission in writing being secured. Requests for permission to reproduce should be addressed to either IEC at the address below or IEC's member National Committee in the country of the requester or from IEEE.

IEC Central Office
3, rue de Varembé
CH-1211 Geneva 20
Switzerland
Tel.: +41 22 919 02 11
Fax: +41 22 919 03 00
info@iec.ch
www.iec.ch

Institute of Electrical and Electronics Engineers, Inc.
3 Park Avenue
New York, NY 10016-5997
United States of America
stds.ipr@ieee.org
www.ieee.org

About the IEC
The International Electrotechnical Commission (IEC) is the leading global organization that prepares and publishes International Standards for all electrical, electronic and related technologies.

About the IEEE
IEEE is the world's largest professional association dedicated to advancing technological innovation and excellence for the benefit of humanity. IEEE and its members inspire a global community through its highly cited publications, conferences, technology standards, and professional and educational activities.

About IEC/IEEE publications
The technical content of IEC/IEEE publications is kept under constant review by the IEC and IEEE. Please make sure that you have the latest edition, a corrigendum or an amendment might have been published.

IEC Catalogue - webstore.iec.ch/catalogue
The stand-alone application for consulting the entire bibliographical information on IEC International Standards, Technical Specifications, Technical Reports and other documents. Available for PC, Mac OS, Android Tablets and iPad.

IEC publications search - www.iec.ch/searchpub
The advanced search enables to find IEC publications by a variety of criteria (reference number, text, technical committee,…). It also gives information on projects, replaced and withdrawn publications.

IEC Just Published - webstore.iec.ch/justpublished
Stay up to date on all new IEC publications. Just Published details all new publications released. Available online and also once a month by email.

Electropedia - www.electropedia.org
The world's leading online dictionary of electronic and electrical terms containing more than 30 000 terms and definitions in English and French, with equivalent terms in 15 additional languages. Also known as the International Electrotechnical Vocabulary (IEV) online.

IEC Glossary - std.iec.ch/glossary
More than 60 000 electrotechnical terminology entries in English and French extracted from the Terms and Definitions clause of IEC publications issued since 2002. Some entries have been collected from earlier publications of IEC TC 37, 77, 86 and CISPR.

IEC Customer Service Centre - webstore.iec.ch/csc
If you wish to give us your feedback on this publication or need further assistance, please contact the Customer Service Centre: csc@iec.ch.

AVA Documents
Document Sharing Hub

Full document details: IEC/IEEE 62582-5-2015

IEC/IEEE 62582-5

Edition 1.0 2015-06

INTERNATIONAL STANDARD

NORME INTERNATIONALE

colour inside

Nuclear power plants – Instrumentation and control important to safety – Electrical equipment condition monitoring methods – Part 5: Optical time domain reflectometry

Centrales nucléaires de puissance – Instrumentation et contrôle-commande importants pour la sûreté – Méthodes de surveillance de l'état des matériels électriques – Partie 5: Technique de rétrodiffusion

INTERNATIONAL
ELECTROTECHNICAL
COMMISSION

COMMISSION
ELECTROTECHNIQUE
INTERNATIONALE

ICS 27.120.20

ISBN 978-2-8322-2704-6

Warning! Make sure that you obtained this publication from an authorized distributor.
Attention! Veuillez vous assurer que vous avez obtenu cette publication via un distributeur agréé.

AVA Documents
Document Sharing Hub

® Registered trademark of the International Electrotechnical Commission
Marque déposée de la Commission Electrotechnique Internationale

Full document details: IEC/IEEE 62582-5-2015

CONTENTS

FOREWORD 4
INTRODUCTION 6
1 Scope and object 8
2 Normative references 8
3 Terms and definitions 8
4 Abbreviations and acronyms 10
5 General description 10
6 Applicability and reproducibility 10
7 OTDR measurements procedure 11
7.1 General 11
7.2 Instrumentation 11
7.3 Measurement wavelengths 12
7.4 Calibration 12
7.5 Precautions for OTDR measurements 12
7.6 Conditioning 12
7.7 OTDR measurement 13
7.8 Measurement errors 15
7.9 Test report 15
Annex A (informative) Factors affecting the measurement of attenuation in fibre optic systems 16
A.1 General 16
A.2 Temperature and humidity 16
A.3 Bending 16
A.4 Transmission light power 16
A.5 Connector interface 16
Annex B (informative) Ageing and degradation of optical fibres in nuclear power plants 17
B.1 Factors affecting ageing 17
B.1.1 General 17
B.1.2 Thermal ageing 17
B.2 Ageing in ionising radiation 18
B.2.1 General 18
B.2.2 Increase of attenuation 18
Annex C (informative) Guidance on selection of parameters for the measurement 22
C.1 Selection of distance range 22
C.2 Selection of pulse duration and definition of dead zone 22
C.3 Selection of wavelength 22
C.4 Selection and position of markers 22
C.5 Selection of method for averaging 24
C.6 Setting of the vertical and horizontal scale (v-zoom, h-zoom) 24
C.7 Vertical and horizontal shifts 24
C.8 Laser on/off 25
C.9 Setting of *IOR*, group index 25
C.10 Use of attenuator 25
Bibliography 26

AVA Documents
Document Sharing Hub
Full document details: IEC/IEEE 62582-5-2015

Figure 1 – Block functions of the OTDR 12
Figure 2 – A typical OTDR waveform – Backscattered power vs distance (km) 14
Figure 3 – Examples of faults 14
Figure B.1 – A typical OTDR-trace 17
Figure B.2 – RIA of different fibre types 19
Figure B.3 – Example for RIA and its wavelength dependence of an optical fibre 20
Figure C.1 – Markers for measuring attenuation 23
Figure C.2 – Markers for measuring splice loss 23
Figure C.3 – LSA and 2PA as approximation methods 24
Figure C.4 – Fibre signature with the attenuator set at 0 dB and 5 dB, respectively 25

Documents
Document Sharing Hub
Full document details: IEC/IEEE 62582-5-2015

INTERNATIONAL ELECTROTECHNICAL COMMISSION

NUCLEAR POWER PLANTS – INSTRUMENTATION AND CONTROL IMPORTANT TO SAFETY – ELECTRICAL EQUIPMENT CONDITION MONITORING METHODS –

Part 5: Optical time domain reflectometry

FOREWORD

1) The International Electrotechnical Commission (IEC) is a worldwide organisation for standardisation comprising all national electrotechnical committees (IEC National Committees). The object of IEC is to promote international co-operation on all questions concerning standardisation in the electrical and electronic fields. To this end and in addition to other activities, IEC publishes International Standards, Technical Specifications, Technical Reports, Publicly Available Specifications (PAS) and Guides (hereafter referred to as "IEC Publication(s)"). Their preparation is entrusted to technical committees; any IEC National Committee interested in the subject dealt with may participate in this preparatory work. International, governmental and non-governmental organisations liaising with the IEC also participate in this preparation. IEEE Standards documents are developed within IEEE Societies and Standards Coordinating Committees of the IEEE Standards Association (IEEE-SA) Standards Board. IEEE develops its standards through a consensus development process, approved by the American National Standards Institute, which brings together volunteers representing varied viewpoints and interests to achieve the final product. Volunteers are not necessarily members of IEEE and serve without compensation. While IEEE administers the process and establishes rules to promote fairness in the consensus development process, IEEE does not independently evaluate, test, or verify the accuracy of any of the information contained in its standards. Use of IEEE Standards documents is wholly voluntary. IEEE documents are made available for use subject to important notices and legal disclaimers (see http://standards.ieee.org/IPR/disclaimers.html for more information).

   IEC collaborates closely with IEEE in accordance with conditions determined by agreement between the two organisations. This Dual Logo International Standard was jointly developed by the IEC and IEEE under the terms of that agreement.

2) The formal decisions or agreements of IEC on technical matters express, as nearly as possible, an international consensus of opinion on the relevant subjects since each technical committee has representation from all interested IEC National Committees. The formal decisions of IEEE on technical matters, once consensus within IEEE Societies and Standards Coordinating Committees has been reached, is determined by a balanced ballot of materially interested parties who indicate interest in reviewing the proposed standard. Final approval of the IEEE standards document is given by the IEEE Standards Association (IEEE-SA) Standards Board.

3) IEC/IEEE Publications have the form of recommendations for international use and are accepted by IEC National Committees/IEEE Societies in that sense. While all reasonable efforts are made to ensure that the technical content of IEC/IEEE Publications is accurate, IEC or IEEE cannot be held responsible for the way in which they are used or for any misinterpretation by any end user.

4) In order to promote international uniformity, IEC National Committees undertake to apply IEC Publications (including IEC/IEEE Publications) transparently to the maximum extent possible in their national and regional publications. Any divergence between any IEC/IEEE Publication and the corresponding national or regional publication shall be clearly indicated in the latter.

5) IEC and IEEE do not provide any attestation of conformity. Independent certification bodies provide conformity assessment services and, in some areas, access to IEC marks of conformity. IEC and IEEE are not responsible for any services carried out by independent certification bodies.

6) All users should ensure that they have the latest edition of this publication.

7) No liability shall attach to IEC or IEEE or its directors, employees, servants or agents including individual experts and members of its technical committees and IEC National Committees, or volunteers of IEEE Societies and the Standards Coordinating Committees of the IEEE Standards Association (IEEE-SA) Standards Board, for any personal injury, property damage or other damage of any nature whatsoever, whether direct or indirect, or for costs (including legal fees) and expenses arising out of the publication, use of, or reliance upon, this IEC/IEEE Publication or any other IEC or IEEE Publications.

8) Attention is drawn to the Normative references cited in this publication. Use of the referenced publications is indispensable for the correct application of this publication.

9) Attention is drawn to the possibility that implementation of this IEC/IEEE Publication may require use of material covered by patent rights. By publication of this standard, no position is taken with respect to the existence or validity of any patent rights in connection therewith. IEC or IEEE shall not be held responsible for identifying Essential Patent Claims for which a license may be required, for conducting inquiries into the legal validity or scope of Patent Claims or determining whether any licensing terms or conditions provided in connection with submission of a Letter of Assurance, if any, or in any licensing agreements are reasonable or non-discriminatory. Users of this standard are expressly advised that determination of the validity of any patent rights, and the risk of infringement of such rights, is entirely their own responsibility.

AVA Documents
Document Sharing Hub

Full document details: IEC/IEEE 62582-5-2015

© IEC/IEEE 2015

International Standard IEC/IEEE 62582-5 has been prepared by subcommittee 45A: Instrumentation, control and electrical systems of nuclear facilities, of IEC technical committee 45: Nuclear instrumentation, in cooperation with the Nuclear Power Engineering Committee of the IEEE Power & Energy Society[1], under the IEC/IEEE Dual Logo Agreement between IEC and IEEE.

This publication is published as an IEC/IEEE Dual Logo standard.

The text of this standard is based on the following documents:

FDIS	Report on voting
45A/1008A/FDIS	45A/1021/RVD

Full information on the voting for the approval of this standard can be found in the report on voting indicated in the above table.

This publication has been drafted in accordance with the ISO/IEC Directives, Part 2.

A list of all parts in the IEC/IEEE 62582 series, published under the general title *Nuclear power plants – Instrumentation and control important to safety – Electrical equipment condition monitoring methods*, can be found on the IEC website.

The IEC Technical Committee and IEEE Technical Committee have decided that the contents of this publication will remain unchanged until the maintenance result date indicated on the IEC web site under "http://webstore.iec.ch" in the data related to the specific publication. At this date, the publication will be

- reconfirmed,
- withdrawn,
- replaced by a revised edition, or
- amended.

IMPORTANT – The 'colour inside' logo on the cover page of this publication indicates that it contains colours which are considered to be useful for the correct understanding of its contents. Users should therefore print this document using a colour printer.

[1] A list of IEEE participants can be found at the following URL: http://standards.ieee.org/downloads/62582/62582-5-2015/62582-5-2015_wg-participants.pdf

Documents
Document Sharing Hub

Full document details: IEC/IEEE 62582-5-2015

INTRODUCTION

a) Technical background, main issues and organisation of the Standard

This IEC/IEEE standard specifically focuses on optical time domain reflectometer methods for condition monitoring for the management of ageing of optical fibres and cables in electrical equipment installed in nuclear power plants.

This IEC/IEEE standard is the fifth part of the IEC/IEEE 62582 series. It contains detailed descriptions of condition monitoring based on optical time domain reflectometer measurements on optical fibres and cables.

The IEC/IEEE 62582 series of standards is issued with a joint logo, which makes it applicable to management of ageing of electrical equipment qualified to IEEE as well as IEC Standards.

Historically, IEEE Std 323™-2003 introduced the concept and role that condition based qualification could be used in equipment qualification as an adjunct to qualified life. In equipment qualification, the condition of the equipment for which acceptable performance was demonstrated is the qualified condition. The qualified condition is the condition of equipment, prior to the start of a design basis event, for which the equipment was demonstrated to meet the design requirements for the specified service conditions.

Significant research has been performed on condition monitoring techniques and the use of these techniques in equipment qualification as noted in NUREG/CR-6704, vol.2 (BNL-NUREG-52610) and JNES-SS-0903, 2009.

It is intended that this standard be used by test laboratories, operators of nuclear power plants, systems evaluators and licensors.

b) Situation of the current standard in the structure of the IEC SC 45A standard series

IEC/IEEE 62582-5 is the third level IEC SC 45A document tackling the specific issue of application and performance of optical time domain reflectometer measurements in management of ageing of optical fibres and cables in electrical instrument and control equipment in nuclear power plants.

IEC/IEEE 62582-5 is to be read in association with IEC/IEEE 62582-1, which provides requirements for application of methods for condition monitoring of electrical equipment important to safety of nuclear power plants.

For more details on the structure of the IEC SC 45A standard series, see item d) of this introduction.

c) Recommendations and limitations regarding the application of this standard

It is important to note that this standard establishes no additional functional requirements for safety systems.

d) Description of the structure of the IEC SC 45A standard series and relationships with other IEC documents and other bodies documents (IAEA, ISO)

The top-level document of the IEC SC 45A standard series is IEC 61513. It provides general requirements for I&C systems and equipment that are used to perform functions important to safety in NPPs. IEC 61513 structures the IEC SC 45A standard series.

IEC 61513 refers directly to other IEC SC 45A standards for general topics related to categorisation of functions and classification of systems, qualification, separation of systems,

AVA Documents
Document Sharing Hub
Full document details: IEC/IEEE 62582-5-2015

defence against common cause failure, software aspects of computer-based systems, hardware aspects of computer-based systems, and control room design. The standards referenced directly at this second level should be considered together with IEC 61513 as a consistent document set.

At a third level, IEC SC 45A standards not directly referenced by IEC 61513 are standards related to specific equipment, technical methods, or specific activities. Usually these documents, which make reference to second-level documents for general topics, can be used on their own.

A fourth level extending the IEC SC 45A standard series, corresponds to the Technical Reports which are not normative.

IEC 61513 has adopted a presentation format similar to the basic safety publication IEC 61508 with an overall safety life-cycle framework and a system life-cycle framework. Regarding nuclear safety, it provides an interpretation of the general requirements of IEC 61508-1, IEC 61508-2 and IEC 61508-4, for the nuclear application sector. In this framework IEC 60880 and IEC 62138 correspond to IEC 61508-3 for the nuclear application sector. IEC 61513 refers to ISO as well as to IAEA GS-R-3 and IAEA GS-G-3.1 and IAEA GS-G-3.5 for topics related to quality assurance (QA).

The IEC SC 45A standards series consistently implements and details the principles and basic safety aspects provided in the IAEA code on the safety of NPPs and in the IAEA safety series, in particular the Requirements SSR-2/1, establishing safety requirements related to the design of Nuclear Power Plants, and the Safety Guide NS-G-1.3 dealing with instrumentation and control systems important to safety in Nuclear Power Plants. The terminology and definitions used by SC 45A standards are consistent with those used by the IAEA.

NOTE It is assumed that for the design of I&C systems in NPPs that implement conventional safety functions (e.g., to address worker safety, asset protection, chemical hazards, process energy hazards) international or national standards would be applied that are based on the requirements of a standard such as IEC 61508.

Documents
Document Sharing Hub

Full document details: IEC/IEEE 62582-5-2015

© IEC/IEEE 2015

NUCLEAR POWER PLANTS – INSTRUMENTATION AND CONTROL IMPORTANT TO SAFETY – ELECTRICAL EQUIPMENT CONDITION MONITORING METHODS –

Part 5: Optical time domain reflectometry

1 Scope and object

This part of IEC/IEEE 62582 contains methods for monitoring the attenuation condition of optical fibres and cables in instrumentation and control systems using optical time domain reflectometer (OTDR) measurements in the detail necessary to produce accurate and reproducible measurements. It includes the requirements for the measurement system and conditions, and the reporting of the measurement results.

The different parts of IEC/IEEE 62582 are measurement standards, primarily for use in the management of ageing in initial qualification and after installation. IEC/IEEE 62582-1 includes requirements for the application of the other parts of IEC/IEEE 62582 and some elements which are common to all methods. Information on the role of condition monitoring in qualification of equipment important to safety is found in IEEE Std 323. Detailed descriptions of methods for OTDR measurement of the quality and functionality of fibre optic cables are given in IEC 61280-4-1 for multimode attenuation and in IEC 61280-4-2 for single-mode attenuation.

2 Normative references

The following documents, in whole or in part, are normatively referenced in this document and are indispensable for its application. For dated references, only the edition cited applies. For undated references, the latest edition of the referenced document (including any amendments) applies.

IEC 61746-1, *Calibration of optical time-domain reflectometers (OTDR) – Part 1: OTDR for single mode fibres*

IEC 61746-2, *Calibration of optical time-domain reflectometers (OTDR) – Part 2: OTDR for multimode fibres*

3 Terms and definitions

For the purposes of this document, the following terms and definitions apply.

3.1
annealing <of radiation-induced attenuation>
recovery of radiation-induced attenuation of an optical fibre by temperature (thermal annealing) and/or transmission light power (photobleaching)

Note 1 to entry: Annealing is related to fibre material and to dose rate and exposure.

3.2
attenuation annealing time
time that is necessary to decrease the attenuation to a certain fraction (e.g., ½ or 1/e) of the attenuation immediately after the end of the irradiation

Documents
Document Sharing Hub
Full document details: IEC/IEEE 62582-5-2015

3.3
graded index fibre
optical fibre having a graded index profile in which the refractive index varies continuously in the core as a function of distance from the axis

[SOURCE: IEC 60050-731:1991, 731-02-11 and 731-02-15, modified]

3.4
index of refraction
the index of refraction (group index) is defined as:

$$IOR = c/c_{\text{fibre}} \quad (1)$$

where

IOR is the index of refraction;

c is the velocity of light in vacuum (299 792 458 m/s);

c_{fibre} is the velocity of light in the fibre.

IOR determines the length of the cable over which the OTDR measurements are made.

3.5
optical attenuation
$A(\lambda)$
measure of the decreasing transmission light power in a fibre at a given wavelength. The definition is:

$$A(\lambda) = |\, 10 \lg (P1(\lambda)/P2(\lambda)) \,| \quad (2)$$

where

$A(\lambda)$ is the attenuation, in dB, at wavelength λ;

$P1(\lambda)$ is the transmission light power traversing one cross-section (marker 1);

$P2(\lambda)$ is the transmission light power traversing a second cross-section (marker 2).

Note 1 to entry: It depends on the nature and length and condition of the fibre and is also affected by measurement conditions.

Note 2 to entry: The term loss is used synonymous with attenuation in this International Standard.

3.6
optical attenuation coefficient
$a(\lambda)$
attenuation per unit length, defined as:

$$a(\lambda) = A(\lambda)/L \quad (3)$$

where L is the unit length in km.

3.7
optical time domain reflectometer
device for characterizing an optical fibre whereby an optical pulse is transmitted through the optical fibre and the optical power of resulting light scattered and reflected back to the input is measured as a function of time

[SOURCE: IEC 60050-731:1991, 731-07-08, modified]

AVA Documents
Document Sharing Hub
Full document details: IEC/IEEE 62582-5-2015

3.8
step index fibre
fibre having a uniform *IOR* within the core

Note 1 to entry: The step is the shift between the core and the cladding, which has a lower *IOR*.

4 Abbreviations and acronyms

Al	Aluminum
A/D	Analog/digital
F	Fluorine
FUT	Fibre under test
Ge	Germanium
GI	Graded index
IOR	Index of refraction (Group index)
LSA	Least square approximation
OH	Hydroxide ion
OTDR	Optical time domain reflectometer
P	Phosphorus
RIA	Radiation induced attenuation
Si	Silicon
SI	Step index
SNR	Signal to noise ratio
UV	Ultra-violet
2PA	Two point approximation

5 General description

Optical time domain reflectometry is a measurement technique for characterising an optical fibre whereby an optical pulse is transmitted through the optical fibre and the transmission light power of the resulting light scattered and reflected back to the input is measured as a function of time. The result is reported as the attenuation coefficient (in dB/km).

OTDR measurements are useful in estimating the attenuation coefficient for fibres with uniform attenuation and for identifying and localizing defects and localized losses. The method gives results that are accurate, reproducible and related to practical use.

Details about attenuation uniformity of optical fibres can be found in IEC TR 62033.

6 Applicability and reproducibility

This International Standard is limited to the use of an OTDR as an instrument for monitoring the attenuation of optical fibres and optical cables as part of management of ageing. The method is not suitable for monitoring the condition of fibre with respect to mechanical integrity.

In general optical fibres are sensitive to ageing, e.g., due to exposure to ionising radiation, which manifests itself mainly through the increase of the optical attenuation, see also Annexes A and B. The attenuation (in dB/km) is used as an indicator of ageing for both optical and hybrid (electrical-optical) cables, with in-situ access, whilst these cables are being operated in nuclear environments.

AVA Documents
Document Sharing Hub
Full document details: IEC/IEEE 62582-5-2015

OTDR measurements allow analysis of the condition of the entire fibre, particularly of longitudinal subsections of the fibre, or even identification of discrete points such as splices. It also permits calculation of the fibre length, although this is outside the scope of this international standard.

Optical cables in safety related applications in nuclear power plants may be shorter than in general applications. Measurement of short optical cables (< 500 m) requires OTDR instruments with high resolution.

The OTDR measurement is affected by the propagation speed and the backscattering behaviour of the fibre. Best accuracy is obtained by measuring the attenuation from both ends of the fibre and averaging the two backscatter traces. Therefore, measurements shall normally be repeated from both ends. This is especially useful in case of unexpected discontinuities. However, the improvement to the accuracy from measurements on both ends is limited and measurements from one end are acceptable in cases where two ends are not accessible.

7 OTDR measurements procedure

7.1 General

For condition monitoring one supervisory channel over all cable segments shall be accessible for OTDR measurements. This could be one spare fibre in each cable segment, one multiplexer channel or the use of an OTDR wavelength not disturbing the data transmission in a fibre (or vice versa) using splitters.

7.2 Instrumentation

An OTDR may contain a number of parts, or modules, which provide the required functions. These include a waveform generator (laser diode), a detector, a signal processing function and a display. The instrument will also provide facilities to allow connection to the fibre cable under test, such as a directional coupler and a fibre connector. The configuration of the OTDR is shown in Figure 1.

The contact between the instrument fibre (adaptor cord) and the FUT shall be of a type assuring repeatability and be clean and free from debris. A mechanical splice is usually used as the contact.

The OTDR shall have a sufficient dynamic range to allow measurement over the FUT.

The instrument may contain facilities for changing the wavelength of the test pulses. In addition, the OTDR may allow operation in either single-mode or multimode configuration.

A typical design of an OTDR consists of two main parts. These include the main frame, with a microprocessor and a waveform display; and a plug-in unit that houses the laser diode, the detector, a directional coupler and the fibre connector. Different plug-in units with separate wavelengths can be used together with the same main frame. The plug-in units can be adapted to either single-mode or multimode applications.

The configuration of the OTDR is shown in Figure 1.

A sequence of pulses of light is sent from a laser diode, and is transmitted via an optical directional coupler and an optical connector into the fibre. The back scattered light, due to Rayleigh scattering, is reflected back to the OTDR via the connector and is led through the directional coupler to the detector. The detector converts the light to an electrical analogue signal, which is amplified and sent to an A/D converter. A microprocessor treats the digital signal and generates a presentation on the waveform display. The adaptor cord is typically

AVA Documents
Document Sharing Hub
Full document details: IEC/IEEE 62582-5-2015

1 km to 2 km long and may act as an attenuator. It is usually connected to the FUT with a mechanical splice. In this way dirt is avoided in the OTDR-connector.

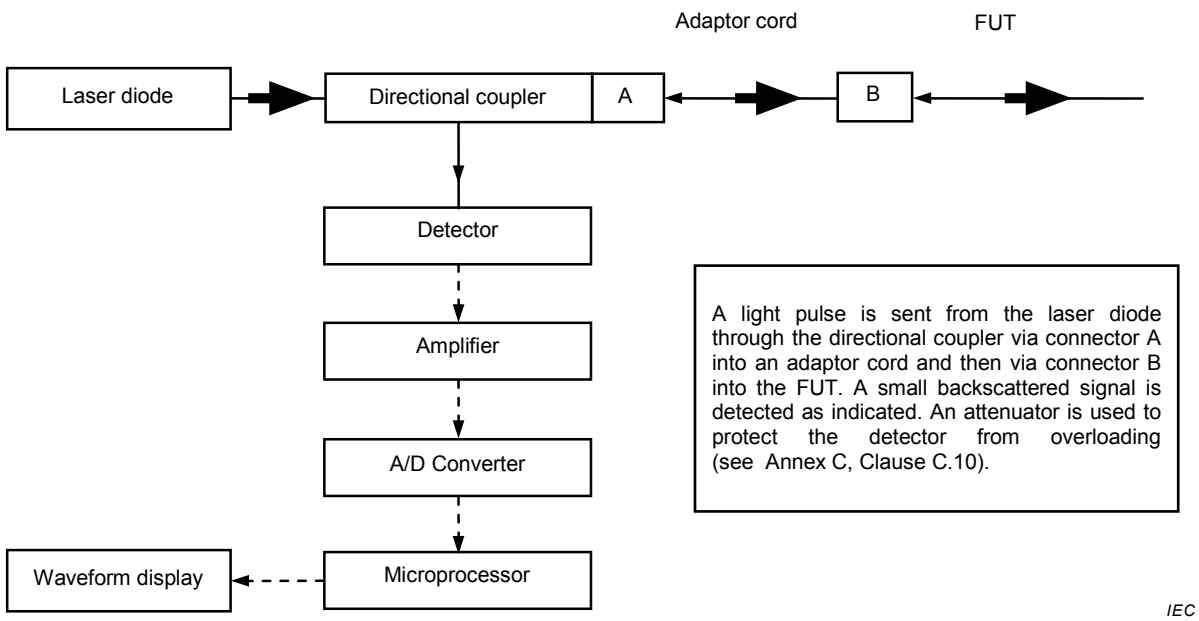

Figure 1 – Block functions of the OTDR

7.3 Measurement wavelengths

For single-mode fibres, it is recommended that the attenuation at wavelength 1 310 nm, 1 550 nm and 1 625 nm is reported. For multimode fibres it is recommended that the attenuation at wavelength 850 nm and 1 300 nm is reported. If wavelengths other than these are used in the field application, the attenuation at those wavelengths shall be reported in addition.

7.4 Calibration

The OTDR equipment shall be calibrated, including the internal clock (for timing accuracy) and the laser emitter (for pulse energy and pulse duration). The calibration shall be performed in accordance with IEC 61746-1 for single-mode fibres, IEC 61746-2 for multimode fibres.

7.5 Precautions for OTDR measurements

Consecutive and comparative OTDR measurements shall be performed using the same parameters, particularly for the pulse energy and duration. Also the wavelength of operation for the condition monitoring equipment shall be selected within the range of wavelengths being transported by the FUT and under operation. Special attention shall be given to the maximum transmitted light power. To avoid photobleaching, the power shall be limited to $\leq$ 1 μW. The values of the parameters used shall be recorded and reported. Guidance for the selection of measurement parameters is given in Annex C.

Ageing and additional attenuation can make it necessary to increase pulse durations and averaging time, as well as change marker positions, see Annex C.

7.6 Conditioning

For laboratory measurements after artificial thermal ageing, the specimen shall be conditioned at a laboratory temperature of (25 ± 5) °C and a relative humidity of 45 % to 75 % for at least 3 h prior to measurement.

Documents
Document Sharing Hub
Full document details: IEC/IEEE 62582-5-2015

For laboratory measurements after artificial exposure to ionising radiation, the OTDR measurements shall be made as soon as possible after the exposure. The laboratory temperature shall be (25 ± 5) ºC and the relative humidity shall be 45 % to 75 %. The temperature at which the measurements are made and the time between the finishing of the exposure and the start of the measurements shall be reported.

NOTE Due to annealing, the effect on the attenuation from ageing in ionising radiation will revert after finishing the exposure. The rate of reversion depends on the surrounding temperature – the higher the temperature, the higher the rate of reversion. See Annex B.

For field measurements, the temperature of the surrounding atmosphere shall be recorded.

7.7 OTDR measurement

Prior to the start of the condition monitoring program, all the parameters of the OTDR shall be determined and fixed, in order to optimise the measurements, both in terms of accuracy and acquisition time. The following parameters shall be selected, stored for consecutive measurements, and reported:

- measurement points (marker 1 and marker 2 in Figure 2);
- wavelength of test;
- pulse duration;
- distance range (the instrument selects power level when the distance range has been set);
- type of connection between the adaptor cord and the FUT;
- number of pulses for averaging;
- backscattering coefficient;
- *IOR* (group index).

Guidance on selection of parameters is given in Annex C.

A pulse duration shall be selected that is long enough to obtain an OTDR trace which visualises the entire FUT, and short enough to optimise the resolution. Repeated measurements may be needed, using longer/shorter pulse durations in order to optimise the resolution.

A typical OTDR trace presenting the received backscattered power versus the distance along the FUT is presented in Figure 2 together with set values and calculated results. Figure 3 gives two examples of possible faults in the cable, identified by the OTDR.

Documents
Document Sharing Hub
Full document details: IEC/IEEE 62582-5-2015

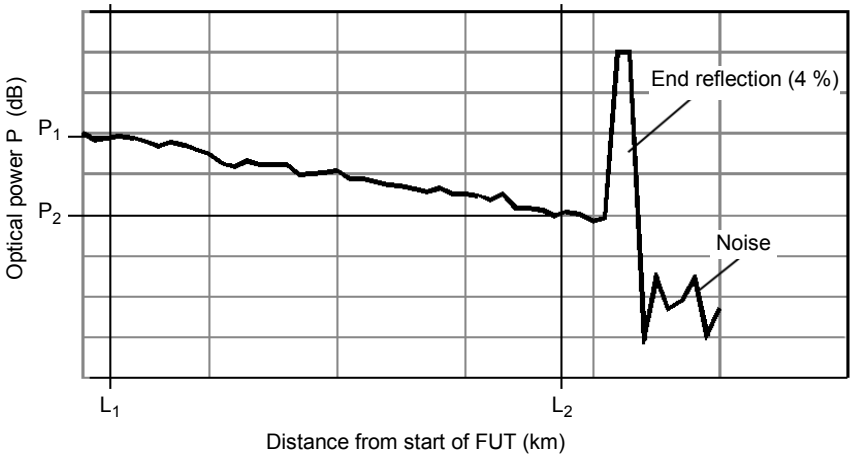

Set and selected values:
Distance range = 18 km
Horizontal scale = 250 m/div
Vertical scale = 0,1 dB/div
Wavelength = 1 550 nm
Pulse duration = 1 µs
Attenuator = 5,0 dB
IOR = 1,500 0
Transmission loss measurement is selected (loss)
LSA is selected as approx. method
L_1 is selected at 0,050 km
L_2 is selected at 0,950 km

Calculated results
Attenuation between the markers $P_1 – P_2$ = 0,18 dB
Distance between the markers $L_2 – L_1$ = 0,9 km
Attenuation coefficient $(P_1 – P_2)/(L_2 – L_1)$ = 0,20 dB/km

IEC

Key

L_1 is the position of marker 1
L_2 is the position of marker 2
P_1 is the power (in dB) at the position of marker 1
P_2 is the power (in dB) at the position of marker 2

Figure 2 – A typical OTDR waveform – Backscattered power vs distance (km)

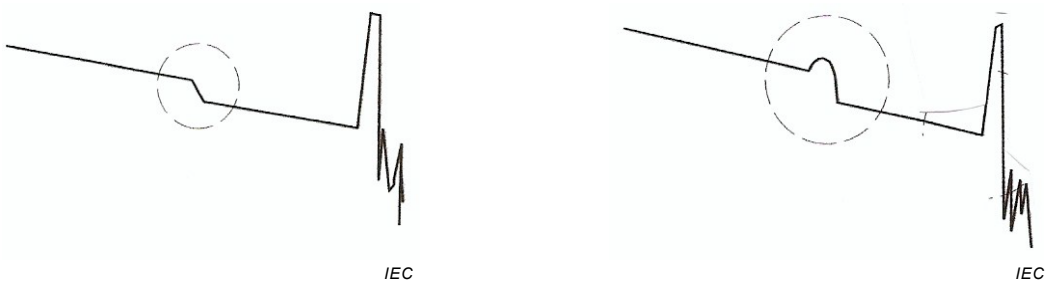

a) Attenuation step **b) Fibre break**

Figure 3 – Examples of faults

The measurements shall determine the average attenuation (in dB/km) over the length of the fibre measured and the local attenuation over discontinuities (splices, faults, etc.). Information on averaging and factors affecting SNR is given in Annex C, Clause C.5.

In the event of a degraded SNR under radiation, the fibre section monitored shall be reduced accordingly, in order to obtain an attenuation coefficient through linear regression with a standard deviation better than 0,9. The fibre section used for the estimation of the attenuation coefficient shall contain a minimum of 50 measurement points.

Documents
Document Sharing Hub
Full document details: IEC/IEEE 62582-5-2015

7.8 Measurement errors

For measurement errors, reference is made to IEC 61280-4-2 (single mode) and IEC 61280-4-1 (multimode).

7.9 Test report

Data used for the condition monitoring of fibre optic cables and components shall be organised in an auditable file or report. The measurement report shall as a minimum include the following information:

a) Number, identification and description of the specimen, including material composition.

b) Pre-history (unaged, artificially aged, naturally aged).

c) Locality of the measurement (laboratory, on-site).

d) For laboratory measurement of thermally artificially aged specimen: time allowed for attaining temperature equilibrium with laboratory before performing the measurements (time interval between removing the specimen from the heat chamber until start of measurement).

e) For laboratory measurement of specimen aged in ionising radiation: time between finishing of radiation exposure and start of measurements.

f) The ambient temperature at which the measurements are made.

g) Measurement instrumentation, most recent calibration date and reference to the calibration certificate.

h) Measurement conditions, including transmission light power, pulse duration, wavelength of operation, measurement points, distance range, number of pulses for averaging, back scattering coefficient, and IOR.

i) Connection of the specimen for measurements (dummy spool, power splitter, switch).

j) Splice losses in case of several cables spliced together.

k) Analysis of any test anomalies.

l) Attenuation coefficient in dB/km for each wavelength. The mean value over the whole length of the fibre measured shall be given, together with the values over discontinuities (faults, splices, etc.). It is recommended to enclose a digital trace showing the attenuation versus distance. The cause of the discontinuities should be identified and reported.

m) Any other information of importance in interpretation of the measurement results in relation to the purposes of the measurements.

Documents
Document Sharing Hub

Full document details: IEC/IEEE 62582-5-2015

Annex A
(informative)

Factors affecting the measurement of attenuation in fibre optic systems

A.1 General

There are many factors that influence the measurement of signal attenuation in a fibre optic system. Some of these are as follows:

a) temperature;

b) humidity;

c) bending;

d) transmission light power;

e) connector interface.

A.2 Temperature and humidity

Temperature has an inverse relationship with signal attenuation, so the lower the temperature, the more the signal attenuation. This inverse temperature relationship will have to be taken into account when analysing the information from condition monitoring. This change in the signal attenuation of the cable can be in a manner that is not monotonic.

Humidity can cause additional fibre attenuation. This will need to be accounted for in testing. Change in humidity levels on subsequent tests can change the fibre attenuation in a manner that is not monotonic.

A.3 Bending

Bending of the cable can affect the fibre attenuation. If the cable bend radius is changed, this can change the attenuation in the cable, such that misinterpretation of the result is possible. In these circumstances, a new baseline may be necessary.

A.4 Transmission light power

The signal used to test the fibre optic cable or a light source may cause photobleaching, which can decrease the attenuation in the fibre (see B.2.2.6). This is taken into account by using a power level that is the same as that used in service, but not above 1 μW.

A.5 Connector interface

Additional attenuation can be developed at the connector interface and this would need to be taken into account when defining the starting point for calculation of the attenuation of the FUT.

Documents
Document Sharing Hub
Full document details: IEC/IEEE 62582-5-2015