IEC/IEEE 80005-1

Edition 2.2 2023-08
CONSOLIDATED VERSION

INTERNATIONAL STANDARD

colour inside

Utility connections in port –
Part 1: High voltage shore connection (HVSC) systems – General requirements

IEC/IEEE 80005-1:2019-03+AMD1:2022-02+AMD2:2023-08 CSV(en)

Documents
Document Sharing Hub

Full document details: IEC/IEEE 80005-1-2023

THIS PUBLICATION IS COPYRIGHT PROTECTED
Copyright © 2023 IEC/ISO/IEEE

All rights reserved. Unless otherwise specified, no part of this publication may be reproduced or utilized in any form or by any means, electronic or mechanical, including photocopying and microfilm, without permission in writing from IEC, ISO or IEEE at the respective address given below.

IEC Secretariat
3, rue de Varembé
CH-1211 Geneva 20
Switzerland
Tel.: +41 22 919 02 11
info@iec.ch
www.iec.ch

ISO copyright office
Case postale 56
CH-1211 Geneva 20
Switzerland
Tel.: +41 22 749 01 11
copyright@iso.org
www.iso.org

Institute of Electrical and Electronics Engineers, Inc.
3 Park Avenue
New York, NY 10016-5997
United States of America
stds.info@ieee.org
www.ieee.org

About the IEC
The International Electrotechnical Commission (IEC) is the leading global organization that prepares and publishes International Standards for all electrical, electronic and related technologies.

About IEC publications
The technical content of IEC publications is kept under constant review by the IEC. Please make sure that you have the latest edition, a corrigendum or an amendment might have been published.

IEC publications search - webstore.iec.ch/advsearchform
The advanced search enables to find IEC publications by a variety of criteria (reference number, text, technical committee, …). It also gives information on projects, replaced and withdrawn publications.

IEC Just Published - webstore.iec.ch/justpublished
Stay up to date on all new IEC publications. Just Published details all new publications released. Available online and once a month by email.

IEC Customer Service Centre - webstore.iec.ch/csc
If you wish to give us your feedback on this publication or need further assistance, please contact the Customer Service Centre: sales@iec.ch.

IEC Products & Services Portal - products.iec.ch
Discover our powerful search engine and read freely all the publications previews. With a subscription you will always have access to up to date content tailored to your needs.

Electropedia - www.electropedia.org
The world's leading online dictionary on electrotechnology, containing more than 22 300 terminological entries in English and French, with equivalent terms in 19 additional languages. Also known as the International Electrotechnical Vocabulary (IEV) online.

Documents
Document Sharing Hub

Full document details: IEC/IEEE 80005-1-2023

IEC/IEEE 80005-1

Edition 2.2 2023-08
CONSOLIDATED VERSION

INTERNATIONAL STANDARD

colour inside

Utility connections in port –
Part 1: High voltage shore connection (HVSC) systems – General requirements

INTERNATIONAL
ELECTROTECHNICAL
COMMISSION

ICS 47.020.60

ISBN 978-2-8322-7476-7

Warning! Make sure that you obtained this publication from an authorized distributor.

Documents
Document Sharing Hub

Full document details: IEC/IEEE 80005-1-2023

Documents
Document Sharing Hub

Full document details: IEC/IEEE 80005-1-2023

IEC/IEEE 80005-1

Edition 2.2 2023-08
CONSOLIDATED VERSION

REDLINE VERSION

colour inside

Utility connections in port –
Part 1: High voltage shore connection (HVSC) systems – General requirements

Documents
Document Sharing Hub

IEC/IEEE 80005-1:2019-03+AMD1:2022-02+AMD2:2023-08 CSV(en)

Full document details: IEC/IEEE 80005-1-2023

CONTENTS

FOREWORD 6
INTRODUCTION 9
1 Scope 10
2 Normative references 10
3 Terms and definitions 12
4 General requirements 13
4.1 System description 13
4.2 Distribution system 14
4.2.1 General 14
4.2.2 Equipotential bonding 14
4.3 Compatibility assessment before connection 15
4.4 HVSC system design and operation 15
4.4.1 System design 15
4.4.2 System operation 15
4.5 Personnel safety 16
4.6 Design requirements 16
4.6.1 General 16
4.6.2 Protection against moisture and condensation 16
4.6.3 Location and construction 16
4.6.4 Electrical equipment in areas where flammable gas or vapour and/or combustible dust can be present 17
4.7 Electrical requirements 17
4.8 System study and calculations 17
4.9 Emergency shutdown including emergency-stop facilities 18
4.10 Ship specifc annexes 19
5 HV shore supply system requirements 19
5.1 Voltages and frequencies 19
5.2 Quality of HV shore supply 21
6 Shore side installation 23
6.1 General 23
6.2 System component requirements 23
6.2.1 Circuit-breaker, disconnector and earthing switch 23
6.2.2 Transformer 23
6.2.3 Neutral earthing resistor 24
6.2.4 Equipment-earthing conductor bonding 24
6.3 Shore-to-ship electrical protection system 24
6.4 HV interlocking 25
6.4.1 General 25
6.4.2 Operating of the high-voltage (HV) circuit breakers, disconnectors and earthing switches 25
6.5 Shore connection convertor equipment 26
6.5.1 General 26
6.5.2 Degree of protection 26
6.5.3 Cooling 26
6.5.4 Protection 27
7 Ship-to-shore connection and interface equipment 27
7.1 General 27

AVA Documents
Document Sharing Hub

7.2 Cable management system 27
7.2.1 General 27
7.2.2 Monitoring of cable mechanical tension 28
7.2.3 Monitoring of the cable length 28
7.2.4 Connectors protection 28
7.2.5 Equipotential bond monitoring 28
7.2.6 Slip ring units 28
7.3 Connectors 29
7.3.1 General 29
7.3.2 Pilot contacts 29
7.3.3 Earth contact 29
~~7.3.4 Fibre-optic connection ..... 30~~
7.4 Interlocking of earthing switches 31
7.5 Ship-to-shore connection cable 31
7.6 Control and monitoring cable 32
7.7 Storage 32
7.8 Data communication 32
8 Ship requirements 32
8.1 General 32
8.2 Ship electrical distribution system protection 33
8.2.1 Short-circuit protection 33
8.2.2 Earth fault protection, monitoring and alarm 33
8.3 Shore connection switchboard 33
8.3.1 General 33
8.3.2 Circuit-breaker, disconnector and earthing switch 33
8.3.3 Instrumentation and protection 34
8.4 Onboard transformer 34
8.5 Onboard receiving switchboard connection point 34
8.5.1 General 34
8.5.2 Circuit-breaker and earthing switch 34
8.5.3 Instrumentation 35
8.5.4 Protection 35
8.5.5 Operation of the circuit-breaker 36
8.6 Ship power restoration 36
9 HVSC system control and monitoring 37
9.1 General 37
9.2 Load transfer via blackout 37
9.3 Load transfer via automatic synchronization 37
9.3.1 General 37
9.3.2 Protection 38
10 Verification and testing 38
10.1 General 38
10.2 Initial tests of shore side installation 38
10.2.1 General 38
10.2.2 Tests 38
10.3 Initial tests of ship-side installation 39
10.3.1 General 39
10.3.2 Tests 39
10.4 Tests at the first call at a shore supply point 39

AVA Documents
Document Sharing Hub
Full document details: IEC/IEEE 80005-1-2023

10.4.1 General ... 39
10.4.2 Tests ... 39
11 Periodic tests and maintenance ... 40
11.1 General ... 40
11.2 Tests at repeated calls of a shore supply point ... 40
11.2.1 General ... 40
11.2.2 Verification ... 40
11.3 Earthing bonding connections ... 40
12 Documentation ... 41
12.1 General ... 41
12.2 System description ... 41
Annex A (informative) Ship-to-shore connection cable ... 42
A.1 Rated voltage ... 42
A.2 General design ... 42
A.2.1 General ... 42
A.2.2 Conductors ... 42
A.2.3 Insulation of power cores and neutral core ... 42
A.2.4 Screening ... 43
A.2.5 Earth conductors ... 43
A.2.6 Pilot element with rated voltage U_0/U (U_m) = 150/250 (300) V ... 43
A.2.7 Optical fibres ... 44
A.2.8 Cabling ... 44
A.2.9 Separator tape ... 44
A.2.10 Outer sheath ... 44
A.2.11 Markings ... 44
A.3 Tests on complete cables ... 45
Annex B (normative) Additional requirements for Roll-on Roll-off (Ro-Ro) cargo ships and Ro-Ro passenger ships ... 47
B.1 General ... 47
Annex C (normative) Additional requirements for cruise ships ... 52
C.1 General ... 52
C.6 Shore side installation ... 57
Annex D (normative) Additional requirements of container ships ... 60
D.1 General ... 60
Annex E (informative) Additional requirements of liquefied natural gas carriers (LNGC) ... 65
E.1 General ... 65
Annex F (informative) Additional requirements for tankers ... 71
F.1 General ... 71
Annex G (normative) Additional requirements for vehicle carriers ... 75
G.1 General ... 75
Bibliography ... 80

Figure 1 – Block diagram of a typical described HVSC system arrangement ... 14
Figure 2 – Phase sequences ... 21
~~Figure 3 – Single harmonic distortion limits ...~~
~~Figure 4 – Fibre-optic socket outlet ...~~
~~Figure 5 – Fibre-optic plug ...~~

AVA Documents
Document Sharing Hub

Full document details: IEC/IEEE 80005-1-2023

Figure A.1 – Bending test arrangement 46
Figure B.1 – General system diagram 48
Figure B.2 – Safety circuits 50
Figure B.3 – Three-phase ~~plug~~ ship connector and ~~socket-outlet~~ ship inlet contact assignment 51
Figure C.1 – General system diagram 52
Figure C.2 – Cruise ship HVSC system functional diagram 53
Figure C.3 – Safety and control circuits 56
Figure C.4 – Three-phase ship connector and ship inlet contact assignment 58
Figure C.5 – Three-phase ship inlet fitted with fail-safe limit switch 59
Figure D.1 – General system diagram 60
Figure D.2 – Safety circuits 62
Figure D.3 – Three-phase plug and socket-outlet contact assignment 63
Figure E.1 – General system diagram 66
Figure E.2 – Three-phase ship connector and ship inlet contact assignment 69
Figure F.1 – General system diagram 72
Figure F.2 – Three-phase ~~shore plug~~ ship connector and ship ~~socket-outlet~~ inlet contact assignment 74
Figure G.1 – General system diagram 76
Figure G.2 – Safety circuits 78
Figure G.3 – Three-phase ship connector and ship inlet contact assignment 79

Table E.1 – LNGC 140 000 m^3 to 225 000 m^3 67
Table E.2 – LNGC > 225 000 m^3 67

Documents
Document Sharing Hub

Full document details: IEC/IEEE 80005-1-2023

INTERNATIONAL ELECTROTECHNICAL COMMISSION

UTILITY CONNECTIONS IN PORT –

Part 1: High voltage shore connection (HVSC) systems – General requirements

FOREWORD

1) The International Electrotechnical Commission (IEC) is a worldwide organization for standardization comprising all national electrotechnical committees (IEC National Committees). The object of IEC is to promote international co-operation on all questions concerning standardization in the electrical and electronic fields. To this end and in addition to other activities, IEC publishes International Standards, Technical Specifications, Technical Reports, Publicly Available Specifications (PAS) and Guides (hereafter referred to as "IEC Publication(s)"). Their preparation is entrusted to technical committees; any IEC National Committee interested in the subject dealt with may participate in this preparatory work. International, governmental and non-governmental organizations liaising with the IEC also participate in this preparation.

   ISO (the International Organization for Standardization) is a worldwide federation of national standards bodies (ISO member bodies). The work of preparing International Standards is normally carried out through ISO technical committees. Each member body interested in a subject for which a technical committee has been established has the right to be represented on that committee. International organizations, governmental and non-governmental, in liaison with ISO, also take part in the work. ISO collaborates closely with the International Electrotechnical Commission (IEC) on all matters of electrotechnical standardization.

   IEEE Standards documents are developed within IEEE Societies and Standards Coordinating Committees of the IEEE Standards Association (IEEE-SA) Standards Board. IEEE develops its standards through a consensus development process, approved by the American National Standards Institute, which brings together volunteers representing varied viewpoints and interests to achieve the final product. Volunteers are not necessarily members of IEEE and serve without compensation. While IEEE administers the process and establishes rules to promote fairness in the consensus development process, IEEE does not independently evaluate, test, or verify the accuracy of any of the information contained in its standards. Use of IEEE Standards documents is wholly voluntary. IEEE documents are made available for use subject to important notices and legal disclaimers (see http://standards.ieee.org/IPR/disclaimers.html for more information).

   IEC collaborates closely with ISO and IEEE in accordance with conditions determined by agreement between the organizations. This Triple Logo International Standard was jointly developed by the IEC, ISO and IEEE under the terms of that agreement.

2) The formal decisions of IEC on technical matters express, as nearly as possible, an international consensus of opinion on the relevant subjects since each technical committee has representation from all interested IEC National Committees. In the ISO, Draft International Standards adopted by the technical committees are circulated to the member bodies for voting. Publication as an International Standard requires approval by at least 75 % of the member bodies casting a vote. The formal decisions of IEEE on technical matters, once consensus within IEEE Societies and Standards Coordinating Committees has been reached, is determined by a balanced ballot of materially interested parties who indicate interest in reviewing the proposed standard. Final approval of the IEEE Standard document is given by the IEEE Standards Association (IEEE-SA) Standards Board.

3) IEC/ISO/IEEE Publications have the form of recommendations for international use and are accepted by IEC National Committees/ISO member bodies /IEEE Societies in that sense. While all reasonable efforts are made to ensure that the technical content of IEC/ISO/IEEE Publications is accurate, IEC, ISO or IEEE cannot be held responsible for the way in which they are used or for any misinterpretation by any end user.

4) In order to promote international uniformity, IEC National Committees undertake to apply IEC Publications (including IEC/ISO/IEEE Publications) transparently to the maximum extent possible in their national and regional publications. Any divergence between any IEC/ISO/IEEE Publication and the corresponding national or regional publication shall be clearly indicated in the latter.

5) IEC, ISO and IEEE do not provide any attestation of conformity. Independent certification bodies provide conformity assessment services and, in some areas, access to IEC marks of conformity. IEC, ISO and IEEE are not responsible for any services carried out by independent certification bodies.

6) All users should ensure that they have the latest edition of this publication.

7) No liability shall attach to IEC, ISO or IEEE or their directors, employees, servants or agents including individual experts and members of technical committees and IEC National Committees and ISO member bodies, or volunteers of IEEE Societies and the Standards Coordinating Committees of the IEEE Standards Association (IEEE-SA) Standards Board, for any personal injury, property damage or other damage of any nature whatsoever, whether direct or indirect, or for costs (including legal fees) and expenses arising out of the publication, use of, or reliance upon, this IEC/ISO/IEEE Publication or any other IEC, ISO or IEEE Publications.

AVA Documents
Document Sharing Hub

8) Attention is drawn to the normative references cited in this publication. Use of the referenced publications is indispensable for the correct application of this publication.

9) Attention is drawn to the possibility that implementation of this IEC/ISO/IEEE Publication may require use of material covered by patent rights. By publication of this standard, no position is taken with respect to the existence or validity of any patent rights in connection therewith. IEC, ISO or IEEE shall not be held responsible for identifying Essential Patent Claims for which a license may be required, for conducting inquiries into the legal validity or scope of Patent Claims or determining whether any licensing terms or conditions provided in connection with submission of a Letter of Assurance, if any, or in any licensing agreements are reasonable or non-discriminatory. Users of this standard are expressly advised that determination of the validity of any patent rights, and the risk of infringement of such rights, is entirely their own responsibility. Further information may be obtained from ISO or the IEEE Standards Association.

This consolidated version of the official IEC Standard and its amendments has been prepared for user convenience.

IEC/IEEE 80005-1 edition 2.2 contains the second edition (2019-03) [documents 18/1643/FDIS and 18/1657/RVD], its amendment 1 (2022-02) [documents 18/1737/FDIS and 18/1754/RVD] and its amendment 2 (2023-08) [documents 18/1810/FDIS and 18/1850/RVD].

In this Redline version, a vertical line in the margin shows where the technical content is modified by amendments 1 and 2. Additions are in green text, deletions are in strikethrough red text. A separate Final version with all changes accepted is available in this publication.

International Standard IEC/IEEE 80005-1 has been prepared by IEC technical committee 18: Electrical installations of ships and of mobile and fixed offshore units, in cooperation with:

- IEC subcommittee 23H: Plugs, socket-outlets and couplers for industrial and similar applications, and for Electric Vehicles, of IEC technical committee 23: Electrical accessories;
- ISO technical committee 8: Ships and marine technology, subcommittee 3: Piping and machinery;
- and IEEE IAS Petroleum and Chemical Industry Committee (PCIC) of the Industry Applications Society of the IEEE.

This document is published as a triple logo (IEC, ISO and IEEE) standard.

This second edition constitutes a technical revision.

This edition includes the following significant technical changes with respect to the previous edition:

a) modification of 4.1, Figure 1:
   – transformer on ship is optional, earthing switches on ship removed;
b) modification of 4.2.2 and new item 11.3:
   – alternative procedure of periodic testing added;
c) modification of 4.9:
   – minimum current value in the safety circuits shall be 50 mA;
   – opening of safety loop shall cause the automatic opening of ship and shore HVSC circuit breakers in a maximum time of 200 ms;
d) modification of 5.2:
   – added Figure on harmonic contents;
e) modification of 6.2.3:
   – earthing transformer with resistor can be used also on the secondary side;
   – neutral earthing resistor rating in amperes shall be minimum 25 A, 5 s;

Documents
Document Sharing Hub

Full document details: IEC/IEEE 80005-1-2023

f) modification of all annexes:

– the safety circuits shall be mandatory;

g) modification of A.2.1:

– a metallic shield shall be installed at least on the power cores or common on pilot wires;

h) modification of B.7.2.1:

– new safety circuit introduced: single line diagram and description;

i) modification of C.4.1:

– SLD for cruise ships was updated, also the safety circuits to be coherent with main body, IEC symbols and introduced more details about the control socket-outlets and plugs manufacturer type;

j) modification of C.7.3.1:

– shore power connector pin assignment is updated;

– all cruise ships shall use 4 cables in all cases;

k) added D.6.1:

– the supply point on shore can be fixed or movable;

l) modification of D.7.3.2:

– the voltage used in the pilot circuit for container ships shall be less than 60 V DC or 25 V AC.

m) added D.8.6 and D.9.3.1:

– automatic restart and synchronization alternatives;

n) Annex E set to informative;

o) Annex F set to informative.

Annexes use the same numbering as Clauses 1 to 12 with an annex letter prefix. Hence, the numbering is not necessarily continuous. Where no additional requirements are identified, the clause is not shown.

International standards are drafted in accordance with the rules given in the ISO/IEC Directives, Part 2.

A list of all the parts in the IEC 80005 series, published under the general title *Utility connections in port*, can be found on the IEC website.

The IEC Technical Committee and IEEE Technical Committee have decided that the contents of this publication and its amendments will remain unchanged until the stability date indicated on the IEC website under "http://webstore.iec.ch" in the data related to the specific publication. At this date, the publication will be

- reconfirmed,
- withdrawn,
- replaced by a revised edition, or
- amended.

IMPORTANT – The “colour inside” logo on the cover page of this publication indicates that it contains colours which are considered to be useful for the correct understanding of its contents. Users should therefore print this publication using a colour printer.

Documents
Document Sharing Hub

Full document details: IEC/IEEE 80005-1-2023

INTRODUCTION

For a variety of reasons, including environmental considerations, it is becoming an increasingly common requirement for ships to shut down ship generators and to connect to shore power for as long as practicable during stays in port. The scenario of receiving electrical power and other utilities from shore is historically known as "cold ironing".

The intention of this part of IEC/IEEE 80005 is to define requirements that support, with the application of suitable operating practices, efficiency and safety of connections by compliant ships to compliant high-voltage shore power supplies through a compatible shore-to-ship connection.

With the support of sufficient planning, cooperation between ship and terminal facilities, and appropriate operating procedures and assessment, compliance with the requirements of this document is intended to allow different ships to connect to high-voltage shore connections (HVSC) at different berths. This provides the benefits of standard, straightforward connection without the need for adaptation and adjustment at different locations that can satisfy the requirement to connect for as long as practicable during stays in port.

Ships that do not apply this document can find it impossible to connect to compliant shore supplies.

Where deviations from this document are considered, it is useful to note the effects of such deviations in the compatibility study.

Where the requirements and recommendations of this document are complied with, high-voltage shore supplies arrangements are likely to be compatible for visiting ships for connection.

Clauses 1 to 12 are intended for application to all HVSC systems. They intend to address mainly the safety and effectiveness of HVSC systems with a minimum level of requirements that would standardise on one solution. This document includes the requirement to complete a detailed compatibility assessment for each combination of ship and shore supply prior to a given ship arriving to connect to a given shore supply for the first time. This does not preclude the use of this document e.g. for safety purposes, such as for proprietary connection systems where a ship operates on dedicated routes.

Annex A includes cabling recommendations that should be used in HVSC systems.

The other annexes in this document are ship-specific annexes that include additional requirements related to agreed standardisation of solutions to achieve compatibility for compliant ships at different compliant berths and to address safety issues that are considered to be particular to that ship type.

Annex A is considered informative for the purposes of this document. Annex A contains performance-based requirements for shore connection cables and was developed by technical experts from a number of countries. IEC technical committee 18, subcommittee 18A and IEC technical committee 20 were consulted regarding cable requirements. It was determined that existing standards for cable can be used at this time and there is presently no need to develop a separate standard for shore connection cables.

Documents
Document Sharing Hub

Full document details: IEC/IEEE 80005-1-2023

UTILITY CONNECTIONS IN PORT –

Part 1: High voltage shore connection (HVSC) systems – General requirements

1 Scope

This part of IEC/IEEE 80005 describes high-voltage shore connection (HVSC) systems, onboard the ship and on shore, to supply the ship with electrical power from shore.

This document is applicable to the design, installation and testing of HVSC systems and addresses

- HV shore distribution systems,
- shore-to-ship connection and interface equipment,
- transformers/reactors,
- semiconductor/rotating frequency convertors,
- ship distribution systems, and
- control, monitoring, interlocking and power management systems.

It does not apply to the electrical power supply during docking periods, for example dry docking and other out of service maintenance and repair.

Additional and/or alternative requirements can be imposed by national administrations or the authorities within whose jurisdiction the ship is intended to operate and/or by the owners or authorities responsible for a shore supply or distribution system.

It is expected that HVSC systems will have practicable applications for ships requiring 1 MVA or more or ships with HV main supply.

Low-voltage shore connection systems are not covered by this document.

2 Normative references

The following documents are referred to in the text in such a way that some or all of their content constitutes requirements of this document. For dated references, only the edition cited applies. For undated references, the latest edition of the referenced document (including any amendments) applies.

IEC 60034 (all parts), *Rotating electrical machines*

IEC 60050-151:2001, *International Electrotechnical Vocabulary – Part 151: Electrical and magnetic devices*

IEC 60076 (all parts), *Power transformers*

IEC 60079 (all parts), *Explosive atmospheres*

IEC 60092-101, *Electrical installations in ships – Part 101: Definitions and general requirements*

Documents
Document Sharing Hub

Full document details: IEC/IEEE 80005-1-2023

IEC 60092-201:1994, *Electrical installations in ships – Part 201: System design – General*

IEC 60092-301, *Electrical installations in ships – Part 301: Equipment – Generators and motors*

IEC 60092-503, *Electrical installations in ships – Part 503: Special features – AC supply systems with voltages in the range of above 1 kV up to and including 15 kV*

IEC 60092-504:2016, *Electrical installations in ships – Part 504: Automation, control and instrumentation*

IEC 60146-1 (all parts), *Semiconductor convertors – General requirements and line commutated convertors*

IEC 60204-11:2000, *Safety of machinery – Electrical equipment of machines – Part 11: Requirements for HV equipment for voltages above 1 000 V a.c. or 1 500 V d.c. and not exceeding 36 kV*

IEC 60332-1-2, *Tests on electric and optical fibre cables under fire conditions – Part 1-2: Test for vertical flame propagation for a single insulated wire or cable – Procedure for 1 kW pre-mixed flame*

IEC 60364-4-41, *Low-voltage electrical installations – Part 4-41: Protection for safety – Protection against electric shock*

IEC 60502-2, *Power cables with extruded insulation and their accessories for rated voltages from 1 kV (U_m = 1,2 kV) up to 30 kV (U_m = 36 kV) – Part 2: Cables for rated voltages from 6 kV (U_m = 7,2 kV) up to 30 kV (U_m = 36 kV)*

IEC 60947-5-1, *Low-voltage switchgear and controlgear – Part 5-1: Control circuit devices and switching elements – Electromechanical control circuit devices*

IEC 61363-1, *Electrical installations of ships and mobile and fixed offshore units – Part 1: Procedures for calculating short-circuit currents in three-phase a.c.*

IEC 61936-1, *Power installations exceeding 1 kV a.c. – Part 1: Common rules*

IEC 62271-200, *High-voltage switchgear and controlgear – Part 200: AC metal-enclosed switchgear and controlgear for rated voltages above 1 kV and up to and including 52 kV*

IEC 62613-1, *Plugs, socket-outlets and ship couplers for high-voltage shore connection systems (HVSC-Systems) – Part 1: General requirements*

IEC 62613-2:2016, *Plugs, socket-outlets and ship couplers for high-voltage shore connection systems (HVSC-Systems) – Part 2: Dimensional compatibility and interchangeability requirements for accessories to be used by various types of ships*

IEC/IEEE 80005-2, *Utility connections in port – Part 2: High and low voltage shore connection systems – Data communication for monitoring and control*

IEEE Std C37.20.2™, *Standard for Metal-Clad Switchgear*

IMO, *International Convention for the Safety of Life at Sea (SOLAS)*:1974, *Consolidated edition 2014*

Documents
Document Sharing Hub

Full document details: IEC/IEEE 80005-1-2023

3 Terms and definitions

For the purposes of this document, the following terms and definitions apply.

ISO, IEC and IEEE maintain terminological databases for use in standardization at the following addresses:

- IEC Electropedia: available at http://www.electropedia.org/
- ISO Online browsing platform: available at http://www.iso.org/obp
- IEEE Standards Dictionary Online: available at http://dictionary.ieee.org

3.1
cable management system
all equipment designed to control, monitor and handle the HV-flexible and control cables and their connection devices

3.2
equipotential bonding
provision of electric connections between conductive parts, intended to achieve equipotentiality

[SOURCE: IEC 60050-195:1998, 195-01-10]

3.3
equipotential bond monitoring device
device that monitors the equipotential bonding between two points

3.4
ESD-1
emergency shutdown-1
shutdown initiated when the ship moves past the warning range of allowable motion forward, aft or outward from the berth, and which initiates an LNG-ESD signal from shore to ship

3.5
ESD-2
emergency shutdown-2
shutdown initiated when the ship moves past the maximum range of allowable motion forward, aft or outward from the berth, and which initiates loading arm disconnection on shore

3.6
high voltage
HV
nominal voltage in range above 1 000 V AC and up to and including 15 kV AC

3.7
LNG-ESD
liquefied natural gas-emergency shutdown
type of emergency shutdown defined at LNG terminals

3.8
low voltage
LV
nominal voltage up to and including 1 000 V AC

Documents
Document Sharing Hub
Full document details: IEC/IEEE 80005-1-2023

3.9
PIC
person in charge
individual responsible for HVSC systems operations

3.10
pilot contact
contact of the plug and socket-outlet, which signals correct plug connection and is a safety-related component

3.11
receiving point
connection point of the flexible cable on the ship

3.12
safe
condition in which safety risks are minimized to an acceptable level

3.13
supply point
connection point of the flexible cable on shore

3.14
fail-safe
able to enter or remain in a safe state in the event of a failure

[SOURCE: IEC 60050-821:2017, 821-01-10]

3.15
safety circuit
normally closed interlocking circuit with pilot contacts and safety devices that shuts down the HVSC system in response to specific initiating events

3.16
connector
coupling device employed to connect conductors of one circuit element with those of another circuit element

4 General requirements

4.1 System description

A typical HVSC system described in this document consists of hardware components as shown in Figure 1.

Documents
Document Sharing Hub

Full document details: IEC/IEEE 80005-1-2023

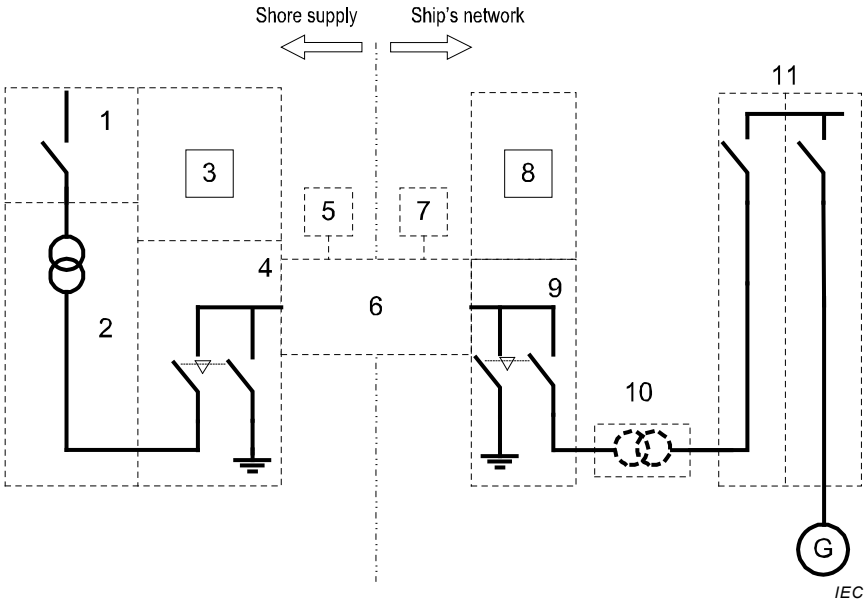

Key

1	Shore supply system	7	Control ship
2	Shore-side transformer	8	On-board protection relaying
3	Shore-side protection relaying	9	On-board shore connection switchboard
4	Shore-side circuit-breaker and earth switch	10	On-board transformer (where applicable)
5	Control shore	11	On-board receiving switchboard
6	Shore-to-ship connection and interface equipment		

Figure 1 – Block diagram of a typical described HVSC system arrangement

4.2 Distribution system

4.2.1 General

Typical distribution systems used on shore are given in IEC 61936-1. Typical ship distribution systems are given in IEC 60092-503.

NOTE IEEE Std 45.1™ and IEEE Std 45.3™ provide additional information on typical ship distribution systems.

4.2.2 Equipotential bonding

An equipotential bonding between the ship's hull and shore earthing system shall be provided, (see 6.2.4).

In order to assure the integrity of the bonding in the shore connection, two alternative procedures are allowed:

a) Continuous monitoring of the bonding. Verification of the equipotential bonding shall be a part of the safety circuit. Loss of equipotential bonding shall result in the shutdown of the HVSC system, and the ship shall go into ship power restoration mode (see 8.6).

b) Periodic testing and maintenance of the bonding connections. Where continuous monitoring of the equipotential bonding is not in place, periodic testing and maintenance of the bonding connections shall be performed and documented (see Clause 11).

NOTE The **terms** earth(ing) and ground(ing) are used interchangeably throughout this document and have the same meaning (see IEC 60050-195:1998,195-01-08). Equipotential bonding as protection against electric shock is described in IEC 61140.

Documents
Document Sharing Hub
Full document details: IEC/IEEE 80005-1-2023

4.3 Compatibility assessment before connection

Compatibility assessment shall be performed to verify the possibility to connect the ship to shore HV supply. Compatibility assessment shall be performed prior to the first arrival at a terminal.

Assessment of compatibility shall be performed to determine the following:

a) compliance with the requirements of this document and any deviations from the recommendations;

b) minimum and maximum prospective short-circuit current (see 4.7 and 4.8);

c) nominal ratings of the shore supply, ship to shore connection and ship connection (see 5.1);

d) any de-rating for cable coiling or other factors (see 7.2.1);

e) acceptable voltage variations at ship switchboards between no-load and nominal rating (see 5.2);

f) steady-state and transient ship load demands when connected to a HV shore supply, HV shore supply response to step changes in load (see 5.2);

g) system study and calculations (see 4.8);

h) verification of ship equipment impulse withstand voltage;

i) compatibility of shore and ship side control voltages, where applicable;

j) compatibility of communication method and means;

k) distribution system compatibility assessment (shore power transformer neutral earthing);

l) functioning of ship earth fault protection, monitoring and alarms when connected to an HVSC supply (see 8.2.2);

m) sufficient cable length;

n) compatibility of safety circuits;

o) total harmonic distortion (THD) (see 5.2);

p) consideration of hazardous areas, where applicable (see 4.6.4);

q) when a HV supply system is connected, consideration shall be given to provide means to reduce current in-rush and/or inhibit the starting of large loads that would result in failure, overloading or activation of automatic load reduction measures;

r) consideration of electrochemical corrosion due to equipotential bonding;

s) utility interconnection requirements for load transfer parallel connection;

t) equipotential bond monitoring (see 4.2.2).

4.4 HVSC system design and operation

4.4.1 System design

The design and construction shall be integrated and coordinated among the parties responsible for shore and ship HVSC systems.

System integration of shore and ship HVSC systems shall be managed by a single designated party and shall be performed in accordance with a defined procedure identifying the roles, responsibilities and requirements of all parties involved.

4.4.2 System operation

During the operation of HVSC systems, the person in charge [PIC(s)] shall be identified at the shore facility and onboard the ship for the purposes of communication.

Documents
Document Sharing Hub

Full document details: IEC/IEEE 80005-1-2023

The PIC(s) shall be provided with sufficient information, instructions, tools and other resources for safety and efficiency of these activities.

An independent means of voice communication should be provided between the ship and the facility's PIC (e.g. two-way radios).

4.5 Personnel safety

Construction of the HV equipment and operating safety procedures shall ensure the safety of personnel during the establishment of the connection of the ship's supply, during all normal operations, in the event of a failure, during disconnection and when not in use.

NOTE The use of the term "safe" is not intended to suggest or guarantee that absolute safety can be achieved in any situation and/or by compliance with the recommended practices set forth herein. The use of terms such as "safe", "intrinsically safe", "electrically safe work practices", "safe work condition", "safe work environment", "safe design", "safe distance", "safe work method", "safe work area", and "safe use" describe practices, conditions, etc. in which safety risks are minimized but not eliminated absolutely, such that safety is not guaranteed.

4.6 Design requirements

4.6.1 General

Protection and safety systems shall be designed based on the fail-safe principle, hard wired.

Suitable warning notices shall be provided at locations along connection-equipment routes, including connection locations.

4.6.2 Protection against moisture and condensation

Effective means shall be provided to prevent accumulation of moisture and condensation, even if equipment is idle for appreciable periods.

4.6.3 Location and construction

HVSC equipment shall be installed in access-controlled spaces.

Equipment shall be suitable for the environment conditions in the space(s) where it is expected to operate. Ship equipment shall comply with the applicable requirements of IEC 60092-101 and IEC 60092-503.

Equipment location is critical to the safety and efficiency of operation of the ship's cargo and mooring systems. When determining the location of the HVSC system, the full range of cargo, bunkering and other utility operations shall be considered, including:

a) the cargo handling and mooring equipment in use on the ship and shore, and the areas that shall be clear for their operation, along with any movement of the ship along the pier required to accommodate these operations;

b) interferences with terminal operations or to allow necessary traffic flow on the pier and maintain open fire lanes where required; and

c) personnel safety measures, such as physical barriers to prevent unauthorized personnel from accessing the HVSC equipment or the cable management equipment.

When determining the connection point of the HVSC system, all tidal conditions and ship operations affecting the ship's free board shall be considered.

Documents
Document Sharing Hub
Full document details: IEC/IEEE 80005-1-2023

4.6.4 Electrical equipment in areas where flammable gas or vapour and/or combustible dust can be present

HVSC equipment shall be located outside the hazardous areas of the ship and shore facilities under normal operating conditions, except where it is shown to be necessarily located in these areas for safety reasons.

HVSC equipment that may fall within one of the hazardous areas of the terminal under emergency conditions (inadvertent movement of ship from berth) shall be

a) certified in accordance with IEC 60079 (all parts) as suitable for the flammable gas or vapour and/or combustible dust encountered; or

b) automatically isolated and discharged before entering the potentially hazardous area.

Control equipment located within hazardous areas shall not present an ignition hazard.

4.7 Electrical requirements

The type and routine tests for all components of HVSC system shall be performed according to relevant standards.

To allow standardisation of the HV shore supply and link nominal voltage (6,6 kV AC or 11 kV AC) in different ports, any equipment requiring conversion to nominal voltage shall be installed onboard.

The prospective short-circuit contribution level from the HV shore distribution system shall be limited by the shore-side system to 16 kA RMS, unless otherwise specified in the ship-specific annexes.

The prospective short-circuit contribution level from the onboard running induction motors and the generators in operation shall be limited to a short-circuit current of 16 kA RMS, unless otherwise specified in the ship type's specific annexes.

Electrical system/equipment, including short-circuit protective device rating, shall be suitable for the prospective maximum short-circuit fault current. Equipment shall be rated for minimum short-circuit withstand current of 16 kA RMS for 1 s, and 40 kA peak, unless otherwise specified in the ship specific annexes.

4.8 System study and calculations

The shore-connected electrical system shall be evaluated. The system study and calculations shall determine the following:

a) the electrical load during shore connection;

b) the short-circuit current calculations (see IEC 61363-1) shall be performed in order to take into account the prospective contribution of the shore supply and the ship's installations. The following ratings shall be defined and used in these calculations:

   1) for shore supply installations, a maximum and minimum prospective short-circuit current for visiting ships;

   2) for ships, a maximum and minimum prospective short-circuit current for visited shore supply installations.

c) the calculations may take into account any arrangements that

   1) prevent parallel connection of HV shore supplies with ship sources of electrical power, and/or

   2) restrict the number of ship generators operating during parallel connection to transfer load, and

   3) restrict load to be connected.

Documents
Document Sharing Hub

Full document details: IEC/IEEE 80005-1-2023

NOTE Provisional load restrictions can be necessary during load transfer.

d) system-charging (capacitive) current for shore and ship; this system-charging current calculation shall consider the shore power system and the expected ship power system including the on-line generator(s);

e) shore power transformer neutral earthing resistor analysis, where neutral resistor is required by annexes (see 6.2.3);

f) transient overvoltage protection analysis (see 5.2);

g) fail-safe principle for cables/connectors operation (see 4.6.1).

These calculated values shall be used to select suitably rated shore connection equipment and to allow the selection and setting of protective devices so that successful discriminatory fault clearance is achieved for the largest on-board load while connected.

The system study shall be made available to all involved parties.

For ships with low voltage main distribution the connection between LV-side of the onboard transformer and main switchboard shall be evaluated, and overload protection shall be provided between the onboard transformer and the receiving switchboard.

Documented alternative proposals that take into account measures to limit the parallel connection to short times may be considered where permitted by the relevant authorities. Documentation shall be made available to relevant ship and shore personnel.

4.9 Emergency shutdown including emergency-stop facilities

Emergency shutdown facilities shall be provided. When activated, they will instantaneously open shore connection circuit-breakers onshore and onboard ship.

Fail-safe, hard-wired circuits (safety circuits) shall be used for emergency shut-down. This does not preclude emergency shut-down activation commands from programmable electronic equipment, for example programmable protection relays.

The relay contacts of the safety circuit shall be designed in accordance with IEC 60947-5-1 and for a rated insulation voltage of U_i = 300 V, AC 5 A, DC 1 A.

Minimum current value in the safety circuits shall be 50 mA.

To address the potential hazard to personnel of access to high-voltage connection cables that have not been discharged, the high-voltage power connections shall be either

a) automatically earthed so that they are safe to touch immediately following the isolation from ship and shore electrical power supplies, or

b) arranged for manual earthing and routed and located such that personnel are prevented from access to live connection cables and live connection points by barriers and/or adequate distance(s) under normal operational conditions.

Barriers and/or adequate distance(s) shall be satisfied with operational procedures established to

c) restrict un-authorized access to HVSC spaces,

d) control personnel access to HVSC spaces and areas when the HV connection is live; locking arrangements may be considered, and

e) arrange for the safe discharge of HV conductors.

Where connection equipment can move into a potentially hazardous area (where flammable gas, vapour and/or combustible dust can accumulate) associated with the terminal or port berth area as a result of the ship inadvertently leaving the berthed position (slipping/breaking

Documents
Document Sharing Hub
Full document details: IEC/IEEE 80005-1-2023

of moorings, etc.), all electrical powered HVSC equipment that is not intrinsically safe shall be automatically isolated, and HV equipment then automatically discharged, so that it will not present an ignition hazard.

The emergency shutdown facilities shall be activated in the event of:

f) loss of equipotential bonding, via the equipotential bond monitoring devices (where utilized),

g) overtension on the flexible cable (mechanical stress) (see 7.2.2),

h) remaining cable length is too low (see 7.2.3),

i) loss of any safety circuit,

j) activation of any manual emergency-stop,

k) activation of protection relays provided to detect faults on the HV connection cable or connectors, and

l) disengaging of power plugs from socket-outlets while HV connections are live before the necessary degree of protection is no longer achieved.

Emergency-stop push buttons, activating emergency shutdown facilities, shall be provided at each of the following locations:

m) an attended onboard ship control station during HVSC;

n) in the vicinity of the socket-outlet;

o) at active cable management system control locations; and

p) at the shore side and ship circuit-breaker locations.

Additional emergency push buttons may also be provided at other locations, where considered necessary.

The means of activation shall be visible and prominent, prevent inadvertent operation and require a manual action to reset.

Opening of safety loop shall cause the automatic opening of ship and shore HVSC circuit breakers in a maximum time of 200 ms.

An alarm to indicate activation of the emergency shutdown shall be provided to advise relevant duty personnel when connected to HV shore supply.

For reliable operation of safety circuits, the pilot cable length and cross section shall be considered.

4.10 Ship specifc annexes

Annex B to Annex G are ship specific annexes that include additional requirements to safety and compatibility for compliant ships at different compliant berths.

5 HV shore supply system requirements

5.1 Voltages and frequencies

To allow standardization of the HV shore supply and link nominal voltage in different ports, HV shore connections shall be provided with a nominal voltage of 6,6 kV AC and/or 11 kV AC galvanically separated from the shore distribution system.

The operating frequencies (Hz) of the ship and shore electrical systems shall match; otherwise, a frequency convertor shall be utilized ashore.

AVA Documents
Document Sharing Hub

Full document details: IEC/IEEE 80005-1-2023

Where ships undertake a repeated itinerary at the same ports and their dedicated berths, other IEC voltage nominal values may be considered (see IEC 60092-503).

~~At the connection point, looking at the socket-outlet/ship connector face,~~ The phase sequence shall be L1-L2-L3 or A-B-C or R-S-T, ~~counter clockwise~~ anticlockwise. A phase sequence indicator shall indicate correct sequence prior to energizing or paralleling HVSC ~~[~~ – see Figure 2a)~~]~~. Figure 2b) illustrates the balanced three-phase voltages in the time domain.

If an observer looking at the phase sequence rotation diagram is fixed at its location, phasors shall rotate anticlockwise in relation to the fixed observer to produce a clockwise indication on the phase sequence indicator [see Figure 2b)].

NOTE See ship specific annexes for phase assignment of the pins in the connector.

Documents
Document Sharing Hub

Full document details: IEC/IEEE 80005-1-2023

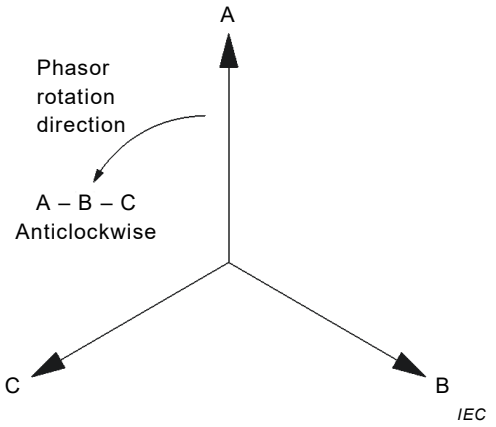

Key

A – A = 0°
A – B = 120°
A – C = 240°

a) Phase sequence rotation – Positive direction

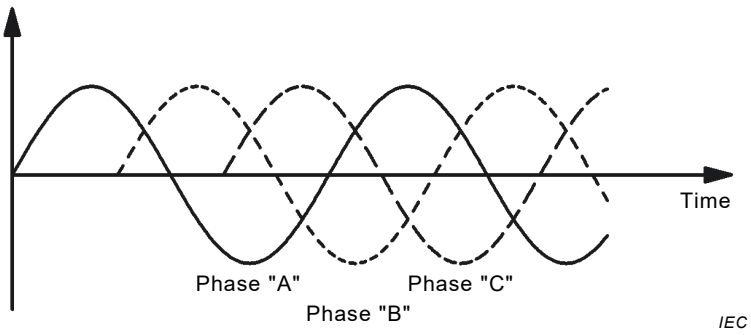

b) Balanced three-phase variables in the time domain

Figure 2 – Phase sequences

5.2 Quality of HV shore supply

The HV shore supply system shall have a documented voltage supply quality specification.

Electrical equipment of ships shall only be connected to shore supplies that will be able to maintain the distribution system voltage, frequency and total harmonic distortion characteristics given below. For compliance, the compatibility assessment referred to in 4.3 shall include verification of the following:

a) voltage and frequency tolerances (continuous):

   1) the frequency shall not exceed the continuous tolerances ±5 % between no-load and nominal rating;

   2) for no-load conditions, the voltage at the supply point shall not exceed a voltage increase of 6 % of nominal voltage;

AVA Documents
Document Sharing Hub
Full document details: IEC/IEEE 80005-1-2023

3) for rated load conditions, the voltage at the supply point shall not exceed a voltage drop of −3,5 % of nominal voltage.

b) voltage and frequency transients:

1) the response of the voltage and frequency at the shore connection when subjected to an appropriate range of step changes in load shall be defined and documented for each HV shore supply installation;

2) the maximum step change in load expected when connected to a HV shore supply shall be defined and documented for each ship. The part of the system subjected to the largest voltage dip or peak in the event of the maximum step load being connected or disconnected shall be identified;

3) comparison of 1) and 2) shall be done to verify that the voltage transients limits of voltage +20 % and −15 % and the frequency transients limits of ±10 % will not be exceeded.

c) harmonic distortion: for no-load conditions, voltage harmonic distortion limits shall not exceed 3 % for single harmonics and 5 % for total harmonic distortion. ~~For harmonics above the 25th harmonic, limits are given by Figure 3 below.~~

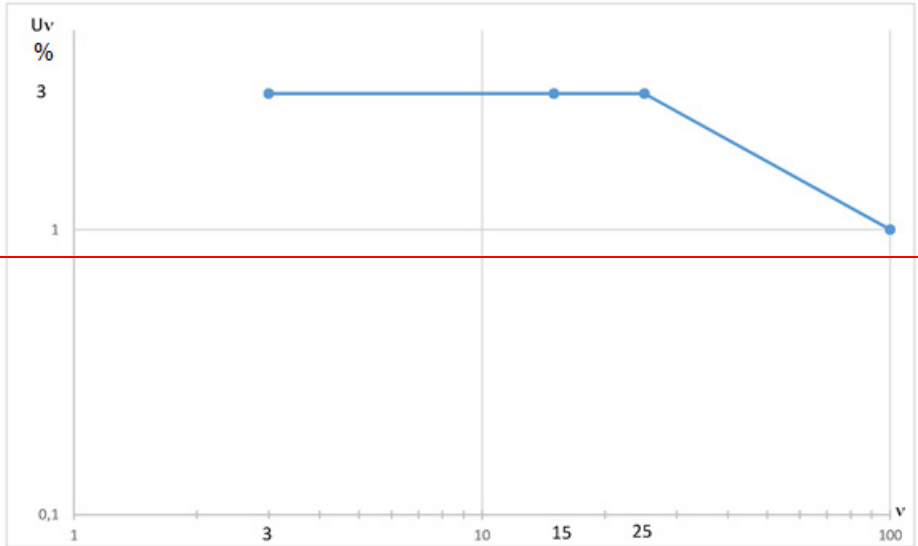

~~**Figure 3 – Single harmonic distortion limits**~~

NOTE Additional recommendations are provided in IEEE Std 519™ ~~and~~, MIL STD 1399-680, and IEC 60092-101.

The above parameters shall be measured at the supply point.

The HV shore supply shall include appropriate rated surge arrestors to protect against fast transient overvoltage surges (e.g. spikes caused by lightning strikes or switching surges).

Different voltage and frequency tolerances may be imposed by the authorities responsible for the shore supply system and these shall be considered as part of the compatibility assessment to verify the effect on the connected ship load is acceptable.

Where the possible loading conditions of a ship when connected to a HV shore supply would result in a quality of the supply different from that specified in IEC 60092-101:1994/AMD1:1995, 2.8, due regard shall be given to the effect this may have on the performance of equipment.

Documents
Document Sharing Hub
Full document details: IEC/IEEE 80005-1-2023

6 Shore side installation

6.1 General

Shore connection equipment and installations shall be in accordance with IEC 61936-1.

NOTE Local authorities can have additional requirements.

The rating of the HVSC system shall be adequate for the required electrical load as calculated by 4.8.

The shore-side electrical system shall ensure that each connected ship is galvanically isolated from other connected ships and consumers.

The use of HVSC system shall not compromise the electrical protection selectivity of the largest on-board load (as per the definition in IEC 60050-151:2001, 151-15-15) while connected.

6.2 System component requirements

6.2.1 Circuit-breaker, disconnector and earthing switch

~~In order to have the installation isolated before it is earthed, the circuit-breaker, disconnector and earthing switch shall be interlocked in accordance with IEC 62271-200.~~

The shore connection switchgear and control gear shall be designed and tested in accordance with IEC 62271-200 or ANSI/UL Metal-Clad Switchgear (IEEE Std C37.20.2™). Switching devices and their combination shall be electrically and mechanically interlocked, to provide safe isolation before earthing and during operation.

NOTE 1 Switching devices and their combination for isolation and earthing can be part of different switchgear functional units (see IEC 60050-441:2000, 441-13-04).

The rated making capacity of the circuit breaker and the earthing switch shall not be less than the prospective peak value of the short-circuit current (I_P) calculated in accordance with IEC 61363-1.

The rated short-circuit breaking capacity of the circuit-breaker shall not be less than the maximum prospective symmetrical short-circuit current ($I_{AC(0,5T)}$) calculated in accordance with IEC 61363-1.

NOTE 2 The short circuit contribution from the shore side can be calculated using IEC 60909.

An automatically operated circuit-breaker shall be provided.

6.2.2 Transformer

In the event adjustments are required to maintain the HV supply voltage within tolerances under load, then these adjustments shall be automatically controlled (see 5.2).

Transformers shall be of the separate winding type for primary and secondary side. The secondary side shall be star-configuration with neutral bushings (e.g., Dyn).

NOTE Dyn = Delta connected primary winding, star connected secondary winding, with provision to connect to the neutral point.

The temperature of supply-transformer windings shall be monitored.

Documents
Document Sharing Hub
Full document details: IEC/IEEE 80005-1-2023

In the event of over-temperature, an alarm signal shall be transmitted to the ship using the data-communication link, if such data-communication link is installed (see 7.8). The alarm signal shall activate an alarm onboard to warn relevant duty personnel.

Short-circuit protection for each supply transformer shall be provided by circuit-breakers or fuses in the primary circuit and by a circuit breaker in the secondary. In addition, overload protection shall be provided for the primary and secondary circuit.

6.2.3 Neutral earthing resistor

The neutral point of the HVSC system transformer shall be earthed

a) through a neutral earthing resistor, or

b) where frequency conversion of the shore supply is required, either through a neutral earthing resistor, or through an earthing transformer with a resistor on the primary or secondary side.

NOTE For HVSC systems dedicated to tankers or liquefied natural gas carriers (LNGC) ship types, refer to ship specific annexes.

The neutral earthing resistor rating in amperes shall not be less than 1,25 times the prospective system charging current. The rating shall be minimum 25 A, 5 s.

The continuity of the neutral earthing resistor shall be continuously monitored. In the event of loss of continuity, the shore-side circuit breaker shall be tripped.

An earth fault shall not create a step or touch voltage exceeding 30 V at any location in the shore-to-ship power system.

6.2.4 Equipment-earthing conductor bonding

A system earthing conductor shall connect the neutral earthing resistor's earthing connection to a nearby system-earthing electrode. An additional system-bonding conductor shall connect the neutral earthing resistor's earthing connection to the earthing bus of the primary shore power switchboard. Bonding shall be in accordance with 8.2.3 of IEC 60204-11:2000.

Equipment-earthing conductors terminated at the shore's three-phase socket-outlets shall be connected to the ship and continued to the ship to create an equipotential bond between the shore and ship. This shall require bonding to the ship's switchgear earthing bus and/or bonding to the ship's hull.

6.3 Shore-to-ship electrical protection system

The HV circuit breaker on the secondary side of the transformer shall open all insulated poles in the event of the following conditions:

a) overcurrent including short-circuit;

b) over-voltage/under-voltage;

c) reverse power;

d) earth fault;

e) unbalanced cable protection (refer to section 7.2.4).

To satisfy this requirement, at least the following protective devices, or equivalent protective measures, shall be provided:

f) synchrocheck (25) or voltage sensing device (for dead bus verification);

g) undervoltage (27);

h) reverse power (32);

Documents
Document Sharing Hub

Full document details: IEC/IEEE 80005-1-2023

i) negative phase sequence overcurrent (46);

j) instantaneous overcurrent (50);

k) AC inverse time overcurrent (51);

l) earth fault overcurrent (51G or 51N);

m) overvoltage (59);

n) AC directional overcurrent (67);

NOTE Numbers in brackets refer to standard device designation numbers as per IEEE Std C37.2™.

Alarms shall be communicated to the ship as common alarm, using the data-communication link, if such data-communication link is installed.

The protection systems shall be provided with battery back-up adequate for at least 30 min. Upon failure of the battery charging or activation of the back-up system, an alarm shall be communicated to the ship (see 7.8).

6.4 HV interlocking

6.4.1 General

Operating personnel shall be protected from electrical hazard by an interlocking arrangement during connection and disconnection of HV connectors.

Operational procedures and interlockings to verify that non-fixed high-voltage cables are discharged before disconnection shall be established.

6.4.2 Operating of the high-voltage (HV) circuit breakers, disconnectors and earthing switches

Arrangements shall be provided so that the circuit breakers cannot be closed when any of the following conditions exist:

a) one of the earthing switches is closed (shore-side/ship-side);

b) the safety circuit is not established (see 7.3.2);

c) emergency-stop facilities are activated;

d) ship or shore control, alarm or safety system self-monitoring diagnostics detect an error that would affect safe connection;

e) the data-communication link between shore and ship is not operational, where applicable;

f) the permission from the ship is not activated (see 7.8);

g) the HV supply is not present;

h) equipotential bonding is not established (via equipotential bond monitoring devices where utilized, or via manual override – see 4.2.2).

Arrangements shall be provided so that the disconnector cannot be closed, or the circuit breaker cannot be racked into the service position, when any of the following conditions exist:

i) one of the earthing switches is closed (shore-side/ship-side);

j) the safety circuit is not established (see 7.3.2);

k) the communication link between shore and ship is not operational, where applicable;

l) equipotential bonding is not established (via equipotential bond monitoring devices where utilized, or via manual override – see 4.2.2).

Arrangements shall be provided so that the earthing switches can only be opened when all the conditions in 7.4 are fulfilled.

Documents
Document Sharing Hub

Full document details: IEC/IEEE 80005-1-2023

6.5 Shore connection convertor equipment

6.5.1 General

Where provided, converting equipment (transformers, rotating frequency convertors and/or semiconductor convertors) for connecting HV shore supplies to a ship electrical distribution system shall be constructed in accordance with IEC 60076 (all parts) for transformers, and IEC 60146-1 (all parts) for semiconductor convertors, as applicable.

NOTE Refer to IEEE Std 1662™ for additional recommendations on testing HV power electronics.

Rotating convertors shall be designed and tested in accordance with IEC 60034 (all parts).

The effect of harmonic distortion and power factor shall be considered in the assignment of a required power rating.

Transformer winding and semiconductor or rotating convertor temperatures shall be monitored and an alarm shall be activated to warn relevant duty personnel if the temperature exceeds a predetermined safe value.

The use of frequency convertors shall not compromise the electrical protection selectivity of the largest on-board load (as per the definition in IEC 60050-151:2001, 151-15-15) while connected.

Where additional selectivity (e.g. with transformer) is required and cannot be achieved, other measures may be agreed between ship and shore giving due regard to a) to g) of 4.3.

NOTE Other measures can include, among other things, switching of protection setting, other protection schemes other than over-current and short circuit.

6.5.2 Degree of protection

The protection for electrical equipment shall be in accordance with IEC 61936-1, as applicable.

6.5.3 Cooling

Where forced or closed-circuit cooling is used, whether by air or with liquid, an alarm shall be initiated when the cooling medium exceeds a predetermined temperature and/or flow limits.

Semiconductor frequency convertor equipment shall be so arranged that it cannot remain loaded unless effective cooling is maintained. Alternatively, the load may be automatically reduced to a level compatible with the cooling available.

Liquid-cooled frequency convertor equipment shall be provided with leakage alarms. A suitable means shall be provided to contain any liquid which may leak from the cooling system so that it does not cause an electrical failure of the equipment.

Where liquid-cooled heat exchangers are used in transformer cooling circuits, there shall be detection of leakage, and the cooling system shall be arranged so that the entry of cooling liquid into the transformer is prevented.

Where the semiconductors and other current carrying parts of semiconductor convertors are in direct contact with the cooling liquid, the liquid shall be monitored for satisfactory conductivity, and an alarm shall be initiated if the conductivity is outside the manufacturer's limits.

The alarms shall be activated to warn relevant duty personnel.

Documents
Document Sharing Hub

Full document details: IEC/IEEE 80005-1-2023

6.5.4 Protection

In the event of overload, an alarm signal shall be activated to warn relevant duty personnel. The alarm shall be activated at a lower overload level than that of the circuit-breaker protection.

Alarms from the onshore protection equipment shall be transmitted to the ship using the data communication link, if such data communication link is installed (see 7.8).

7 Ship-to-shore connection and interface equipment

7.1 General

Ship-to-shore connection and interface equipment includes standardized HVSC systems, cables, earthing and communications between ship and shore.

A ship-to-shore connection cable installation shall be arranged to provide adequate movement compensation, cable guidance and anchoring/positioning of the cable during normal planned ship-to-shore connection and operating conditions.

The shore-side of the connection cable shall be fitted with a plug if a socket-outlet is used ashore.

The ship-side of the connection cable shall be fitted with a ship connector if a ship inlet is used onboard.

Ship-to-shore connection cable extensions shall not be permitted.

The suitability of connectors with regard to peak short-circuit withstand capability shall be verified during the compatibility assessment (see 4.3).

The ship-specific annexes provide additional requirements.

NOTE If an alternative to the standard arrangement of cable and HV plug and socket-outlets is designed, it is likely that the installation will not be able to connect to a compliant shore supply/ship without significant additional equipment and modification.

7.2 Cable management system

7.2.1 General

The cable management system shall

a) be capable of moving the ship-to-shore connection cable, enabling the cable to reach between the supply point and the receiving point;

b) be capable of maintaining an optimum length of cable which minimizes slack cable, and prevents the tension limits from being exceeded;

c) be equipped with a device (e.g. limit switches), independent of its control system, to monitor maximum cable tension and maximum cable pay-out;

d) address the risk of submersion by prevention or through the equipment's design;

e) be positioned to prevent interference with ship berthing and mooring systems, including the systems of ships that do not connect to shore power while berthed at the facility;

f) maintain the bending radius of cables above the minimum bending radius recommended by the manufacturer during deployment, in steady-state operation and when stowed;

g) be capable of supporting the cables over the entire range of ship draughts and tidal ranges; and

Documents
Document Sharing Hub

Full document details: IEC/IEEE 80005-1-2023

h) be capable of retrieving and stowing the cables once operations are complete.

Where the cable management system employs cable reel(s), the HVSC system rated power shall be based on the operating condition with the maximum number of wraps of cable stowed on the reel that is encountered during normal operations. Where applicable, the cable sizing shall include appropriate de-rating factors.

7.2.2 Monitoring of cable mechanical tension

The cable management system shall not permit the cable tension to exceed the permitted design value.

A means to detect maximum cable tension shall be provided, or where an active cable management system that limits cable tension is provided, means to detect the shortage of available cable length shall be provided with threshold limits provided in two stages:

Stage 1: alarm;

Stage 2: activation of emergency shutdown facilities (see 4.9).

7.2.3 Monitoring of the cable length

The cable management system shall enable the cables to follow the ships' movements over the entire range of the ships' draughts and tidal ranges, and the maximum range of allowable motion forward, aft or outward from the dock.

Where the cable length may vary, the remaining cable length shall be monitored, and threshold limits are to be arranged in two stages:

Stage 1: alarm;

Stage 2: activation of emergency shutdown facilities (see 4.9).

Consideration may be given to equivalent alternative measures (automatic break-away release, connectors with shear bolts and pilot lines, connection with ship/shore emergency shutdown system, etc.).

7.2.4 Connectors protection

The ship and shore HV circuit-breakers shall be arranged to open all insulated poles in the event of a damaging current unbalance between multiple phase conductors (separate, parallel power cables and connectors).

Protective devices to satisfy this requirement shall be installed ashore to isolate the connection in the event of damaging unbalance detection.

7.2.5 Equipotential bond monitoring

The equipotential bond monitoring device, where utilized, shall be installed either ashore or onboard where the cable management system is installed. Equipotential bond monitoring termination devices, where utilized, shall be installed on the other side.

7.2.6 Slip ring units

Slip ring units shall be tested in accordance with IEC 62271-200 (excluding non-applicable tests) for:

a) HV tests,

Documents
Document Sharing Hub

Full document details: IEC/IEEE 80005-1-2023

b) impulse-voltage withstand tests,

c) insulation resistance measurements,

d) heat run test with nominal currents,

e) short-circuit withstand tests,

f) arc test, if accessible under energized conditions, and

g) ingress protection tests (IP rating).

Other testing standards may be considered.

7.3 Connectors

7.3.1 General

Connectors shall be in accordance with IEC 62613-1 and the following.

The contact assignment of connectors shall be according to applicable ship annexes.

Handling of connectors shall be possible only when the associated earthing switch is closed.

Connections shall be made in areas where personnel will be protected in the event of an arc flash as a result of an internal fault in the connectors by barrier and access control measures. These measures shall be supported by access control procedures.

Each connector shall be fitted with pilot contacts for continuity verification of the safety circuit. See applicable ship annexes for safety circuit descriptions. For single connector connections, a minimum of five pilots is required. If more than one cable is installed, an interlock shall be used so that no cable remains unused.

Contact sequence shall be in the following order:

a) connection:
   1) earth contact;
   2) power contacts;
   3) pilot contacts.

b) disconnection:
   1) pilot contacts;
   2) power contacts;
   3) earth contact.

Minimum electrical and mechanical ratings of connectors are given in Annexes B to F.

Support arrangements are required so that the weight of connected cable is not borne by any plug or ship connector termination or connection.

7.3.2 Pilot contacts

Pilot contact connections shall open before the necessary degree of protection is no longer achieved during the removal of an HV-plug or connector. Pilot contacts are part of the safety circuit.

7.3.3 Earth contact

The current-carrying capacity of the earth contact shall be at least equal to the rated current of the other main contacts.

Documents
Document Sharing Hub

Full document details: IEC/IEEE 80005-1-2023

~~7.3.4 Fibre-optic connection~~

~~Where required by a ship-specific annex, an optical fibre socket-outlet (Figure 4), shall be installed on the connector or plug. Fibre-optic cable, terminated with a fibre-optic plug (Figure 5), shall be mounted on the stationary side, adjacent to the three-phase inlet or socket outlet.~~

~~The fibre-optic receptacle shall have 4 optical terminals with 2,5 mm ceramic ferrules and configuration in accordance with Figure 4. Pin 1 will be used for TX transmission and pin 2 for RX transmission.~~

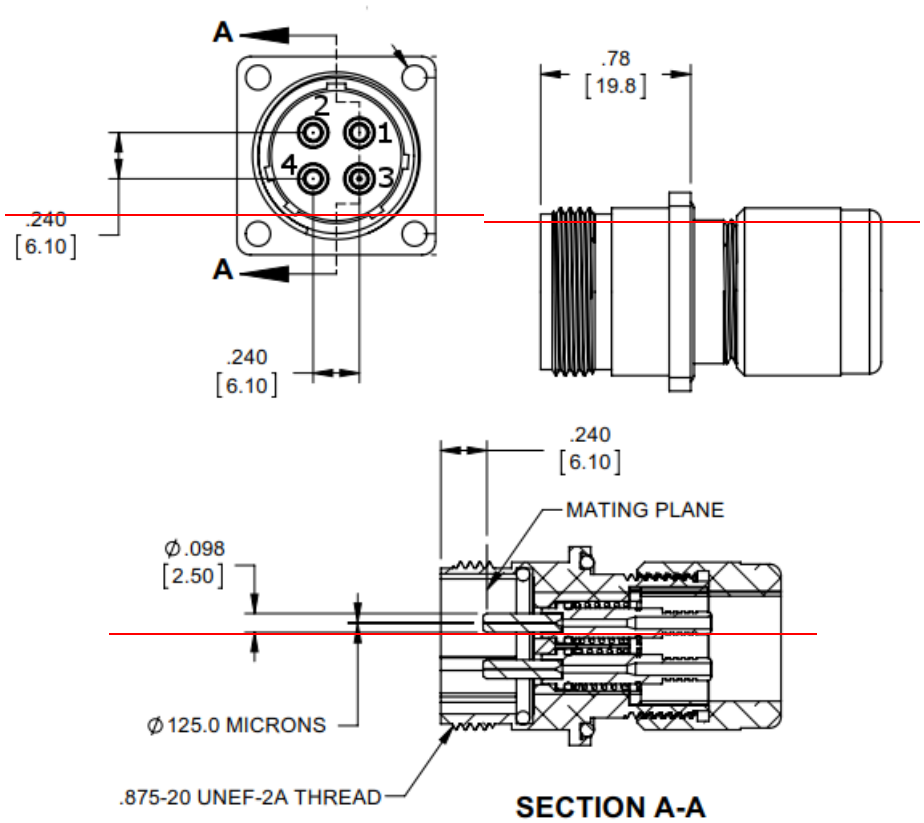

~~Figure 4 – Fibre-optic socket outlet~~

~~Fibre-optic plug shall have 4 optical terminals with 2,5 mm ceramic ferrules and configuration in accordance with Figure 5. Pin 1 will be used for TX transmission and pin 2 for RX transmission.~~

Documents
Document Sharing Hub
Full document details: IEC/IEEE 80005-1-2023

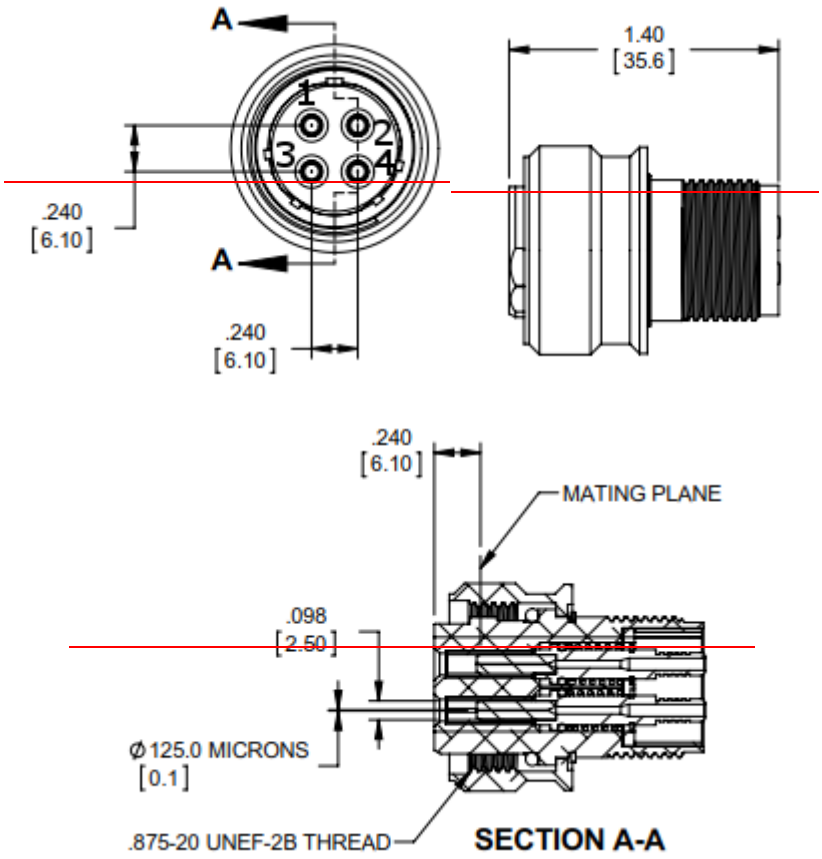

~~Figure 5 – Fibre-optic plug~~

7.4 Interlocking of earthing switches

The earthing switches shall remain closed until

a) all connections are made and the pilot contact circuit (see 7.3.2) is closed,

b) no emergency-stop switch is activated,

c) the communication link between shore and ship is operational,

d) ship or shore control, alarm or safety system self-monitoring properties detects that no failure would affect the safety of connections, and

e) the permission from ship and shore is activated.

Interlocking shall be hardwired.

7.5 Ship-to-shore connection cable

Cables shall be at least of a flame-retardant type in accordance with IEC 60332-1-2. The outer sheath shall be oil-resistant and resistant to sea air, seawater, solar radiation (UV) and shall be non-hygroscopic. The temperature class shall be at least 90 °C. The insulation shall be in accordance with Annex A. Correction factor for ambient air temperatures above 45 °C shall be taken into account according to IEC 60092-201:1994, Table 7. The maximum operating temperature shall not exceed 95 °C, taking into account any heating effects (e.g. as a result of cable coiling).

Due consideration should be given to requirements for smoke emission, acid gas evolution and halogen content for cables installed or stored in accommodation spaces and passenger areas.

Documents
Document Sharing Hub
Full document details: IEC/IEEE 80005-1-2023

Guidance for HV connection cable electrical ratings and specification is given in Annex A.

7.6 Control and monitoring cable

Control and monitoring cables shall be at least of a flame-retardant type in accordance with IEC 60332-1-2 and independent of the power cable assembly. The environmental requirements for the sheath shall be the same as described for the ship-to-shore connection cable in 7.5.

The control and monitoring cables, if integrated with the power cable assembly, shall be able to withstand internal and external short-circuits.

For details and further guidance, see Annex A.

7.7 Storage

Arrangements shall be provided for stowage when not in use, such that

a) ship-board equipment is stored in dry spaces;

b) shore-based equipment shall comply with national standards;

c) removable equipment shall be stowed, stored and removed without damage;

d) equipment does not present a hazard; and

e) connectors shall maintain their IP ratings.

NOTE Temporary coverings are not considered to satisfy the requirements listed in 7.7.

7.8 Data communication

Where required by the ship-specific annex, the data-communication link between ship and shore arrangements shall be used for communicating the following information:

a) shore transformer high-temperature alarm (see 6.2.2);

b) HV shore supply circuit-breaker protection activation (see 6.3);

c) permission to operate HV circuit-breakers for HV ship to shore connection (see 6.4 and 8.5.5);

d) if ship or shore control, alarm or safety system self-monitoring properties detect an error that would affect safety of connection (see 6.4.2 and 4.9);

e) indication of emergency-stop activation (see 4.9);

f) where provided, shore control functions in accordance with Clause 9;

g) indication of emergency disconnection of the shore supply (see 4.9); and

h) failure of the battery's charging or activation of the back-up system (see 6.3).

The communication protocol for communication link between ship and shore shall be in accordance with IEC/IEEE 80005-2.

8 Ship requirements

8.1 General

The instrumentation described shall be at all locations where load transfer and synchronization are performed.

On ships without HV power generation systems, additional efforts may be required so that the ship's person in charge (PIC) is aware of HV safe operating practices and of the operation of the ship's HVSC system in accordance with IEC 60092-509.

Documents
Document Sharing Hub

Full document details: IEC/IEEE 80005-1-2023

The onboard HVSC system shall not interfere with the normal operation of the ship while at sea.

8.2 Ship electrical distribution system protection

8.2.1 Short-circuit protection

The maximum prospective short-circuit current for which the HV shore supply or the ship's electrical system/equipment is rated shall not be exceeded at any point in the installation by connecting to HV-shore supplies. This shall be addressed as part of the compatibility assessment (see 4.3 and applicable ship annexes).

Where connection to more than one HV shore supply is possible, measures shall be taken to prevent HV shore supplies from being connected in parallel if the maximum prospective short-circuit current is exceeded at any point in the installation.

Where device settings are required to be changed when connected to an HVSC supply, means shall be provided to change settings to predetermined values. The protection settings in use shall be clearly indicated at the control station.

8.2.2 Earth fault protection, monitoring and alarm

Earth fault protection, monitoring and alarm devices shall be of a type designed to operate effectively when connected to an HVSC supply with distribution system earthing in accordance with 6.2.3. Subclause 6.2.3 requires distribution system earthing that may differ from that of the ship's.

Where device settings are required to be changed when connected to an HVSC supply, means shall be provided to change settings to predetermined values. The protection settings in use shall be clearly indicated at the control station.

8.3 Shore connection switchboard

8.3.1 General

A shore connection switchboard shall be provided at a suitable location, as close as possible to the receiving point.

The shore connection switchboard shall be in accordance with IEC 62271-200, service continuity LSC1.

The switchboard shall include a circuit-breaker to protect the ship's electrical equipment downstream. In no case shall the protection at the shore connection switchboard be omitted.

8.3.2 Circuit-breaker, disconnector and earthing switch

In order to have the installation isolated before it is earthed, the circuit-breaker, disconnector and earthing switch shall be interlocked in accordance with IEC 62271-200.

The rated making capacity of the circuit breaker and the earthing switch shall not be less than the prospective peak value of the short-circuit current (I_P) calculated in accordance with IEC 61363-1.

The rated short-circuit breaking capacity of the circuit-breaker shall not be less than the maximum prospective symmetrical short-circuit current ($I_{AC(0,5T)}$) calculated in accordance with IEC 61363-1.

An automatic operated circuit-breaker shall be provided.

Documents
Document Sharing Hub

Full document details: IEC/IEEE 80005-1-2023

8.3.3 Instrumentation and protection

The shore connection switchboard shall be equipped with:

a) voltmeter: all three phases;

b) short-circuit devices: tripping and alarm;

c) overcurrent devices: tripping and alarm;

d) earth-fault indicator: alarm; and

e) unbalanced protection for systems with more than one ship inlet.

The protection and safety system shall be continuously powered. A standby power supply for the protection and safety system with automatic change-over shall be provided with a capacity for at least 30 min, in accordance with IEC 60092-504:2016, 9.7.2.6. Upon failure of the battery's charging or activation of the back-up system, an alarm shall be activated to warn relevant duty personnel.

Alarms and indications shall be provided at an appropriate location for safety and effective operation.

8.4 Onboard transformer

Transformers, if any, shall be of the separate winding type for primary and secondary side.

If the transformer supplies LV systems, an earthed shield winding shall be provided between HV and LV windings.

An onboard transformer may not be required if the ship's network is designed for the shore supply voltage and the neutral point treatment is in line with the ship's systems.

When necessary, means shall be provided to reduce transformer current in-rush and/or inhibit the starting of large motors, or the connection of other large loads, when an HV supply system is connected (see 4.8 and 5.2).

8.5 Onboard receiving switchboard connection point

8.5.1 General

A panel shall be provided as an onboard receiving switchboard.

Where parallel connection of the HV shore supply and the ship's sources of electrical power for transferring of load is arranged, synchronizing devices shall be provided.

NOTE An onboard receiving switchboard connection point is normally a part of the main switchboard (see Figure 2a).

8.5.2 Circuit-breaker and earthing switch

The rated making capacity of the circuit breaker and the earthing switch shall not be less than the prospective peak value of the short-circuit current (I_P) calculated in accordance with IEC 61363-1.

The rated short-circuit breaking capacity of the circuit-breaker shall not be less than the maximum prospective symmetrical short-circuit current ($I_{AC(0,5T)}$) calculated in accordance with IEC 61363-1.

An automatic circuit-breaker shall be provided.

Documents
Document Sharing Hub

Full document details: IEC/IEEE 80005-1-2023

An earthing switch shall be installed if the main switchboard rated voltage exceeds 1 000 V AC.

8.5.3 Instrumentation

If load transfer via parallel connection is chosen, the instrumentation shall be

a) two voltmeters,

b) two frequency meters,

c) one ammeter with an ammeter switch to enable the current in each phase to be read, or an ammeter in each phase,

d) phase sequence indicator, and

e) one synchronizing device.

One voltmeter and one frequency meter shall be connected to the switchboard's busbars; the other voltmeter and frequency meter shall enable the voltage and frequency of the shore connection to be measured.

If load transfer via blackout is chosen, the instrumentation shall comprise at least

f) one voltmeter,

g) one frequency meter,

h) one ammeter with an ammeter switch to enable the current in each phase to be read, or an ammeter in each phase, and

i) phase sequence indicator.

The voltmeter and the frequency meter shall enable the voltage and frequency of the shore connection to be measured (see 9.2).

8.5.4 Protection

Tripping and alarm criteria for the circuit-breaker shall be the following:

a) short-circuit: tripping with alarm;

b) overcurrent in two steps:

   1) alarm, and

   2) tripping with alarm;

c) earth fault:

   1) tripping with alarm if required by the type of isolation system used;

d) over-/under-voltage in two steps:

   1) alarm, and

   2) tripping with alarm;

e) over-/under-frequency in two steps:

   1) alarm, and

   2) tripping with alarm;

f) reverse power: tripping with alarm*, and

g) phase sequence protection with alarm and interlock.

To satisfy this requirement, at least the following protective devices, or equivalent protective measures, shall be provided:

h) synchrocheck (25)*;

i) undervoltage (27);

Documents
Document Sharing Hub

Full document details: IEC/IEEE 80005-1-2023

j) reverse power (32)*;

k) phase sequence voltage (47);

l) overload (49);

m) instantaneous overcurrent (50);

n) overcurrent (51);

o) earth fault (51G) or (59N);

p) overvoltage (59);

q) frequency (81) (under and over).

NOTE 1 The phase sequence protection protects the ship's system against wrong phase connection.

NOTE 2 Numbers in brackets refer to standard device designation numbers as per IEEE Std C37.2.

Tripping of unessential consumers and restoration of ship power should be considered where these measures could prevent complete power loss.

Protection functions marked with an asterisk (*) may be omitted when load transfer via blackout is chosen.

8.5.5 Operation of the circuit-breaker

Arrangements shall be provided so that the circuit-breakers cannot be closed when any of the following conditions exist:

a) one of the earthing switches is closed (shore-side/ship-side);

b) the safety circuit is not established (see 7.3.2);

c) emergency-stop facilities are activated;

d) ship or shore control, alarm or safety system self-monitoring properties detect an error that would affect the safety of the connection;

e) the data-communication link between shore and ship is not operational, where applicable;

f) the HV supply is not present;

g) equipotential bonding is not established (via equipotential bond monitoring devices where utilized, or via manual override – see 4.2.2);

h) earth fault on ship distribution system is detected.

It is recommended to have one PIC on the ship and one facility PIC. An independent means of voice communication shall be provided between the ship and the facility's PIC (e.g., two-way radios).

For ships on a regular service trade, the PIC may be responsible for both ship and shore HVSC operations.

If synchronization is established from shore, interlocking may be different.

8.6 Ship power restoration

When the ship's main source of electrical power is shut down and failure of the connected HVSC supply occurs, the shore connection switchboard circuit-breaker shall automatically open followed by

a) starting of the emergency source of electrical power to supply emergency services equivalent to SOLAS CH II-1/D, Reg. 42 for passenger ships or 43 for cargo ships,

b) automatic connection of the transitional source of electrical power to emergency services, equivalent to SOLAS CH II-1/D, Reg. 42 for passenger ships or 43 for cargo ships, and

AVA Documents
Document Sharing Hub

Full document details: IEC/IEEE 80005-1-2023

c) starting and connecting to the main switchboard of the main source of electrical power and sequential restarting of essential services, in the shortest time practical. This shall be automatic in the event of emergency shut-down activation.

Failures include loss of HV power or disconnection (including activation of emergency shutdown or electrical system protective device activation).

It may be necessary to relax the requirements for automatic starting and connection of the ship's electrical power sources onboard existing ships constructed prior to the introduction of SOLAS CH II-1/D, Regs. 42 or 43. In such cases, alternative measures for the restoration of ship power acceptable to the relevant authorities should be provided.

An alarm shall be provided to advise relevant duty personnel. The alarm shall indicate the failure that caused the activation.

9 HVSC system control and monitoring

9.1 General

Ship equipment shall be protected and controlled by the ship's own protection and control systems.

If the shore supply fails for any reason, supply by the ship's own generators is permitted, after disconnecting the shore supply.

Load transfer shall be provided via blackout or automatic synchronization.

9.2 Load transfer via blackout

Interlocking means shall be provided so that the shore supply can only be connected to a dead switchboard. The interlocking means shall be arranged to prevent connection to a live switchboard when operating normally or in the event of a fault, for example a fault in the blackout monitoring circuit.

The simultaneous connection of an HV shore supply and a ship's source of electrical power to the same dead section of the electrical system shall be prevented (see 8.5.3 and 8.5.4).

9.3 Load transfer via automatic synchronization

9.3.1 General

The HV shore supply and the ship's source(s) of electrical power temporarily in parallel shall be in accordance with the following:

a) load shall be automatically synchronized and transferred between the HV shore supply and the ship's source(s) of electrical power following their connection in parallel;

b) the load transfer shall be completed in the shortest time practical without causing machinery or equipment failure or operation of protective devices, and this time shall be used as the basis for defining the transfer time limit;

c) any system or function used for paralleling or controlling the shore connection shall have no influence on the ship's electrical system, when there is no shore connection.

The transfer time limit shall be defined and made available to the personnel responsible. Where the transfer time limit is adjustable to match the ability of an external source of electrical power to accept and shed load, the procedure for setting this limit shall be addressed in operating instructions.

Documents
Document Sharing Hub

Full document details: IEC/IEEE 80005-1-2023

Where operation of only designated or a restricted number of ship source(s) of electrical power is required to permit the safe transfer of load between an HV shore supply and ship source(s) of electrical power, the arrangements shall fulfil this requirement before and during parallel connection.

The instrumentation and protection requirements contained in 8.5.3 and 8.5.4 shall be met for parallel transfer.

9.3.2 Protection

If the defined transfer time limit (see 9.3.1) for transferring of load between HV-shore supply and ship source(s) of electrical power is exceeded, one of the sources shall be disconnected automatically by the ship, and an alarm shall be provided to advise relevant duty personnel. Special care shall be taken not to exceed the maximum permissible load steps of the generator sets in accordance with IEC 60092-301.

Where load reductions are required to transfer load, this shall not result in loss of essential services for the ship's safety.

10 Verification and testing

10.1 General

All HV system components shall have passed type tests and routine tests according to the relevant standards.

The HV system, including control equipment, shall be tested in accordance with a prescriptive test programme.

Tests shall be performed to demonstrate that the electrical system, control, monitoring and alarm systems have been correctly installed and are in good working order before being put into service. Tests shall be realistic and simulations avoided as far as is practicable.

If the equipment has not been used for a period of 30 months, the initial tests shall be repeated.

NOTE Such tests are intended to indicate the general condition of the installation. However, satisfactory test results do not in themselves necessarily ensure that the installation is satisfactory in all respects.

10.2 Initial tests of shore side installation

10.2.1 General

These tests shall verify that the shore-side installation complies with this document to achieve a documented conformity record.

Tests shall be performed after completion of the installation.

10.2.2 Tests

The following tests shall be performed:

a) visual inspection;

b) power frequency test for HV switchgear assemblies and voltage test for cables in accordance with IEC 62271-200 and IEC 60502-2;

c) insulation resistance measurement;

d) measurement of the earthing resistor, including connection cables to star point and earthing bus;

AVA Documents
Document Sharing Hub

e) Shore-side bonding connection resistance from earthing bus of primary shore power switchboard terminal to connection point shore side (refer to 11.3);

f) function test including correct settings of the protection devices;

g) function test of the interlocking system;

h) function test of the control equipment;

i) phase-sequence test [see Figure 2a)];

j) function test of the cable management system where applicable;

k) additional tests if required by national regulations.

10.3 Initial tests of ship-side installation

10.3.1 General

These tests shall verify that the ship-side installation complies with this document. The target is to achieve a test certificate.

Tests shall be performed after completion of the installation.

These tests shall be conducted as witness tests together with the appropriate authorities.

10.3.2 Tests

The following tests shall be performed:

a) visual inspection;

b) power frequency test for HV switchgear assemblies and voltage test for cables in accordance with IEC 62271-200 and IEC 60502-2;

c) insulation resistance measurement;

d) ship-side bonding connection resistance (refer to 11.3);

e) function test including correct settings of the protection devices;

f) function test of the interlocking system;

g) function test of the control equipment;

h) phase-sequence test [see Figure 2a)];

i) function test of the cable management system, where applicable; and

j) integration tests to demonstrate that the ship-side installations such as the power management system, integrated alarm, monitoring and control system work properly together with the new installation.

10.4 Tests at the first call at a shore supply point

10.4.1 General

A compatibility assessment study in accordance with 4.3 shall be performed.

Upon completion of the tests in 10.2.2 and 10.3.2, the tests of 10.4.2 shall be conducted.

10.4.2 Tests

The following tests shall be performed as an integration test of the complete HVSC system:

a) visual inspection;

b) power frequency test for HV switchgear assemblies and voltage test for cables in accordance with IEC 62271-200 and IEC 60502-2;

c) insulation resistance measurement;

Documents
Document Sharing Hub

Full document details: IEC/IEEE 80005-1-2023

d) measurement of the earthing resistance;

e) function test of the protection devices;

f) function test of the interlocking system;

g) function test of the control equipment;

h) equipotential bond monitoring test, where utilized, or manual override test;

i) phase-sequence test [see Figure 2b)];

j) function test of the cable management system;

k) integration tests to demonstrate that the shore- and ship-side installations work properly together.

The power frequency test for HV switchgear assemblies, voltage test for cables, insulation resistance measurement and measurement of the earthing resistance shall be performed only if one of the installations, shore-side or ship-side, has been out of service or not in use for more than 30 months.

11 Periodic tests and maintenance

11.1 General

A record of annual maintenance, repair, equipment modifications and the test results shall be available for the shore- and ship-side HVSC system.

11.2 Tests at repeated calls of a shore supply point

11.2.1 General

If the time between port calls does not exceed 12 months and if no modifications have been performed either on the shore side or ship side, or both, the verification in 11.2.2 shall be conducted.

If this time is exceeded, the tests in accordance with 10.4.2 shall be performed.

NOTE The time between port calls means the same ship at the same shore supply point.

11.2.2 Verification

The following shall be performed or provided:

a) visual inspection;

b) confirmation that no earth fault is present;

c) statement of voltage and frequency;

d) an authorized switching and connection procedure or equivalent.

Procedures should include an approved "Lock-out, Tag-out" system that is jointly controlled by the ship's PIC and the shore's PIC.

11.3 Earthing bonding connections

Where equipotential bonding is not continuously monitored, the following procedures are required:

a) Physical connection points shall be inspected at a frequency not exceeding 12 months.

b) Shore-side bonding connection resistance shall be measured at a frequency not exceeding 12 months. Results shall not exceed 1 Ω.

Documents
Document Sharing Hub

Full document details: IEC/IEEE 80005-1-2023

c) Ship-side bonding connection resistance shall be measured at a frequency not exceeding 6 months. Results shall not exceed 1 Ω.

Measurement methods are site-specific and shall be documented.

12 Documentation

12.1 General

For the HVSC system and each control apparatus, the manufacturer shall deliver documentation concerning principles of operation, technical specifications, mounting instructions, required start-up or commissioning procedures, fault-finding procedures, maintenance and repair, as well as lists of necessary test facilities and replaceable parts.

12.2 System description

A complete system description, including circuit diagrams, specifying set points and operation instructions, shall be prepared by parties responsible for shore and ship HVSC systems.

The parties responsible for shore and ship HVSC systems shall provide a testing and verification programme for the whole installation that will demonstrate compliance with the specification.

Documents
Document Sharing Hub

Full document details: IEC/IEEE 80005-1-2023

Annex A
(informative)

Ship-to-shore connection cable

A.1 Rated voltage

The standard rated voltages U_0/U (U_m) of the cables considered are as follows:

$$U_0/U\ (U_m) = 6/10\ (12)\ \text{kV RMS}$$

The standard rated voltages U_0/U (U_m) of the neutral cables considered are as follows:

$$U_0/U\ (U_m) = 1{,}8/3\ (3{,}6)\ \text{kV RMS}$$

where

U_0 is the rated voltage between phase conductor and earth or metallic screen for which the cable is designed;

U is the rated frequency voltage between phase conductors for which the cable is designed;

U_m is the maximum value of the highest system voltage that may be sustained under normal operating conditions at any time and at any point in the system. It excludes transient voltage conditions and rapid disconnection of loads.

A.2 General design

A.2.1 General

The cables should be constituted as follows: power cores with copper conductors, conductor screen, insulation, insulation screen. The power cores should be laid up with earth cores with copper conductor and semi conducting layer. Pilot and fibre-optic elements, if specified in the applicable ship annexes, should be laid up in the interstices of the power cores. A metallic shield shall be installed at least on the power cores or a common shield on pilot wires.

NOTE IEC 60092-350:2008, 4.6, provides further information regarding the use of inner coverings. IEC 60092-350:2008, 4.7, provides further information regarding the use of inner sheathing.

The neutral cables are constituted as follows: core with copper conductor, insulation and outer sheath.

Where an alternative to the recommendations of Annex A is proposed, it is possible that the installation will not be suitable for connection to a compliant shore supply/ship. Application of an alternative should be documented and made available to personnel in charge of the compatibility assessment.

A.2.2 Conductors

All conductors should be flexible (class 5 of IEC 60228 or Table 11 of IEEE Std 1580-2010™). The conductors should be plain or metal-coated copper conductors.

A.2.3 Insulation of power cores and neutral core

The insulating compounds should be extruded cross-linked solid dielectric designated as EPR, HF EPR, HEPR or HF HEPR in IEC 60092-360 or equivalent of EPR, HF EPR, HEPR or HF HEPR in IEEE Std 1580™.

AVA Documents
Document Sharing Hub
Full document details: IEC/IEEE 80005-1-2023

Electrical and non-electrical characteristics of the insulation system should be as specified in IEC 60092-360 or IEEE Std 1580™ for the type of insulating compound used.

Insulation thickness should be in accordance with IEC 60092-354, or IEEE Std 1580™ for the standard rated voltages.

Insulation thickness for the neutral core should be in accordance with IEC 60092-353 for the standard rated voltages.

A.2.4 Screening

Screening of individual power cores should consist of a conductor screen and an insulation screen.

The conductor screen should be non-metallic and should consist of an extruded semi-conducting compound or a combination of an extruded semi-conducting compound and a semi-conducting tape. The conductor screen should be firmly bonded to the insulation.

The insulation screen should consist of a non-metallic semi-conducting layer and, if necessary to fulfil the cable test requirements within Annex A, in combination with a metallic layer.

The metallic layer, where required, should be applied over the individual cores and should comply with the requirements of 5.5 of IEC 60092-354:2014, or IEEE Std 1580™.

National authorities having jurisdiction may require a metallic component in the insulation screen.

A.2.5 Earth conductors

A.2.5.1 General

Earth conductors should be flexible copper conductors in accordance with class 5 of IEC 60228 or Table 11 of IEEE Std 1580™-2010 forming together at least 50 % of the power core cross-section.

A.2.5.2 Conductor screen of earth conductors (optional)

The conductor screen, when used, should be non-metallic and should consist of an extruded semi-conducting compound, in accordance with IEC 60092-354 or IEEE Std 1580.

A.2.6 Pilot element with rated voltage U_0/U (U_m) = 150/250 (300) V

A.2.6.1 Conductors

Pilot conductors should be flexible, plain or metal-coated copper conductors in accordance with class 5 of IEC 60228 or Table 11 of IEEE Std 1580™-2010, with a minimum nominal cross-sectional area of 1,5 mm^2.

A.2.6.2 Insulation

The insulation of pilot conductors should be extruded cross-linked solid dielectric of one of the types indicated in A.2.3.

Electrical and non-electrical characteristics of the insulation system should be as specified in IEC 60092-360 or IEEE Std 1580 for the relevant type of insulating compound used.

Thickness of insulation should be in accordance with IEC 60092-376 or IEEE Std 1580™ for the relevant insulation type.

Documents
Document Sharing Hub

Full document details: IEC/IEEE 80005-1-2023

Pilot cores should be arranged as required by the annex specific to the type of ship. A wrapped covering with tapes or an extruded covering is permitted over the cores. Screening is optional.

A.2.7 Optical fibres

Optical fibres shall consist of a minimum number of six 62,5/125 gradient fibres. Optical fibres should be in accordance with IEC 60793-2-10, product specification A1b.

There should be no breakage of the optical fibres after conclusion of the mechanical bending test (see A.3) of the cable.

A.2.8 Cabling

The three power cores, the earth core(s), the pilot element and the optical fibres should be laid up.

A.2.9 Separator tape

If separator tape is used, it should be wrapped around the assembled cores and should consist of a suitable, non-hygroscopic material.

A.2.10 Outer sheath

The outer sheathing material should have a high level of mechanical properties as per IEC 60092-360 or IEEE Std 1580™. Thermoplastic polyurethane (TPU) in accordance with EN 50363-10-2 is also an acceptable material. For all sheath materials, the minimum tensile strength should be 12,5 N/mm^2. Minimum elongation at break should be 300 %. The minimum thickness at any point of the extruded outer sheath should be 6 mm for high-voltage cables and 2,5 mm for separate neutral cable.

A.2.11 Markings

A.2.11.1 Indication of origin

Cable sheaths should be permanently marked repeatedly throughout their length with an indication of origin with the manufacturer's name and/or registered trademark, rated voltage (U_0/U), construction (number of cores and cross-sectional area of power conductors, earth conductors, pilots and fibre type of fibre optics) and the relevant standard.

EXAMPLE "Manufacturer's name or trademark" 3×185/95 + 3×1.5 + 6× 62.5/125 6/10 kV IEC/IEEE Std 80005-1.

A.2.11.2 Continuity

Continuity should be in accordance with IEC 60092-354 (IEC 60092-353, for neutral cable) or IEEE Std 1580™.

A.2.11.3 Durability

Durability should be in accordance with IEC 60092-354 (IEC 60092-353, for neutral cable) or IEEE Std 1580™.

A.2.11.4 Legibility

Legibility should be in accordance with IEC 60092-354 (IEC 60092-353, for neutral cable) or IEEE Std 1580™.

Documents
Document Sharing Hub
Full document details: IEC/IEEE 80005-1-2023

A.3 Tests on complete cables

For these tests, reference is made to the relevant clauses of IEC 60092-350 or IEEE Std 1580™.

For test methods for insulation and sheaths, reference should be made to the appropriate part of IEC 60811 (all parts).

Routine tests, special tests and type tests should be conducted in accordance with IEC 60092-354 or IEEE Std 1580™ with the following additions or modifications.

a) Bending test (see Figure A.1):
   1) The test should consist of 5 000 cycles of operation.
   2) After 2 500 cycles, the cable should be rotated 180 degrees.

b) The diameter of the bending reels should be 10 D with a tolerance of ±5 %;

   where:
   1) D is the actual external diameter of the cable sample, in millimetres;
   2) tensile force should be 15 N/mm^2 of power cores;
   3) maximum % of broken wires for each conductor and metallic screen, if required, should not exceed 20 %;
   4) maximum % of broken optical fibres to be 0 %.

On completion of this test, the sample should be subjected to a partial discharge measurement. The magnitude of discharges at 1,73 U_0 should not be higher than 10 pC.

Documents
Document Sharing Hub
Full document details: IEC/IEEE 80005-1-2023

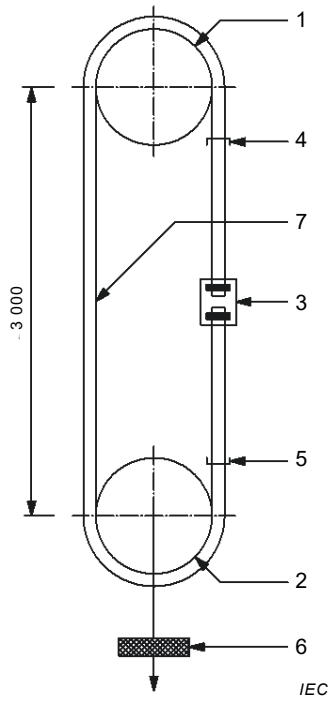

Key

1	Upper bending reel	5	Lower point of return
2	Lower bending reel	6	Tensioning device
3	Clamp	7	Specimen movement
4	Upper point of return		

Figure A.1 – Bending test arrangement

c) Sunlight-resistance test on outer sheath (duration of test 720 h):

1) The test should be performed in accordance with ISO 4892-2:2013, Table 3, test method A, cycle no. 1.

2) Maximum permissible change: tensile strength ±40 %, and elongation at break ±40 %.

d) Abrasion test on outer sheath:

1) The test should be performed in accordance with ISO 4649:2010, test method A.

2) Relative volume loss, ΔV_{rel}: max 300 mm^3.

e) Flame propagation test:

The test should be performed in accordance with IEC 60332-1-2 and should at least satisfy the recommended requirements of Annex A of this document.

f) Behaviour of completed cable at low temperatures:

The test should be performed in accordance with IEC 60092-350:2008, 8.9.1, 8.9.2, and Annex E, or IEEE Std 1580™. The test should be conducted at −40 °C ± 2 °C.

g) Resistance between earth conductor and semi-conductive layer:

The resistance between earth conductor and semi-conductive layer should be maximum 500 ohms before and after bending test.

AVA Documents
Document Sharing Hub