IEC TR 60919-2

Edition 2.2 2020-04

CONSOLIDATED VERSION

colour inside

Performance of high-voltage direct current (HVDC) systems with line-commutated converters – Part 2: Faults and switching

IEC TR 60919-2:2008-11+AMD1:2015-06+AMD2:2020-04 CSV(en)

Documents
Document Sharing Hub

Full document details: IEC TR 60919-2-2020

THIS PUBLICATION IS COPYRIGHT PROTECTED
Copyright © 2020 IEC, Geneva, Switzerland

All rights reserved. Unless otherwise specified, no part of this publication may be reproduced or utilized in any form or by any means, electronic or mechanical, including photocopying and microfilm, without permission in writing from either IEC or IEC's member National Committee in the country of the requester. If you have any questions about IEC copyright or have an enquiry about obtaining additional rights to this publication, please contact the address below or your local IEC member National Committee for further information.

IEC Central Office
3, rue de Varembé
CH-1211 Geneva 20
Switzerland

Tel.: +41 22 919 02 11
info@iec.ch
www.iec.ch

About the IEC
The International Electrotechnical Commission (IEC) is the leading global organization that prepares and publishes International Standards for all electrical, electronic and related technologies.

About IEC publications
The technical content of IEC publications is kept under constant review by the IEC. Please make sure that you have the latest edition, a corrigendum or an amendment might have been published.

IEC publications search - webstore.iec.ch/advsearchform
The advanced search enables to find IEC publications by a variety of criteria (reference number, text, technical committee,…). It also gives information on projects, replaced and withdrawn publications.

IEC Just Published - webstore.iec.ch/justpublished
Stay up to date on all new IEC publications. Just Published details all new publications released. Available online and once a month by email.

IEC Customer Service Centre - webstore.iec.ch/csc
If you wish to give us your feedback on this publication or need further assistance, please contact the Customer Service Centre: sales@iec.ch.

Electropedia - www.electropedia.org
The world's leading online dictionary on electrotechnology, containing more than 22 000 terminological entries in English and French, with equivalent terms in 16 additional languages. Also known as the International Electrotechnical Vocabulary (IEV) online.

IEC Glossary - std.iec.ch/glossary
67 000 electrotechnical terminology entries in English and French extracted from the Terms and definitions clause of IEC publications issued between 2002 and 2015. Some entries have been collected from earlier publications of IEC TC 37, 77, 86 and CISPR.

Documents
Document Sharing Hub

Full document details: IEC TR 60919-2-2020

IEC TR 60919-2

Edition 2.2 2020-04

CONSOLIDATED VERSION

colour inside

Performance of high-voltage direct current (HVDC) systems with line-commutated converters – Part 2: Faults and switching

INTERNATIONAL ELECTROTECHNICAL COMMISSION

ICS 29.200; 29.240.99

ISBN 978-2-8322-8263-2

Warning! Make sure that you obtained this publication from an authorized distributor.

® Registered trademark of the International Electrotechnical Commission

Documents
Document Sharing Hub

Full document details: IEC TR 60919-2-2020

Documents
Document Sharing Hub

Full document details: IEC TR 60919-2-2020

IEC TR 60919-2

Edition 2.2 2020-04

REDLINE VERSION

colour inside

Performance of high-voltage direct current (HVDC) systems with line-commutated converters – Part 2: Faults and switching

IEC TR 60919-2:2008-11+AMD1:2015-06+AMD2:2020-04 CSV(en)

Documents
Document Sharing Hub

Full document details: IEC TR 60919-2-2020

CONTENTS

FOREWORD 6
1 Scope 8
2 Normative references 9
3 Outline of HVDC transient performance specifications 9
3.1 Transient performance specifications 9
3.2 General comment 10
4 Switching transients without faults 10
4.1 General 10
4.2 Energization and de-energization of a.c. side equipment 10
4.3 Load rejection 12
4.4 Start-up and shut-down of converter units 13
4.5 Operation of d.c. breakers and d.c. switches 13
5 AC system faults 16
5.1 General 16
5.2 Fault categories 16
5.3 Specification matters affecting transient performance 16
5.3.1 Effective a.c. system impedance 16
5.3.2 Power transfer during faults 17
5.3.3 Recovery following fault clearing 17
5.3.4 Reactive power consumption during fault and post-fault recovery periods 18
5.3.5 Load rejection due to a.c. faults 18
5.3.6 Switching of reactive power equipment 19
5.3.7 Effects of harmonic voltages and current during faults 19
5.3.8 Shift in control modes of operation 20
5.3.9 Power modulation on the HVDC system 20
5.3.10 Emergency power reductions 20
5.4 Specification impact on control strategy 20
6 AC filters, reactive power equipment and a.c. bus faults 22
6.1 General 22
6.2 Transient overvoltages in filter banks 22
6.3 Transient overcurrents in filter and capacitor banks 23
6.4 Capacitor unbalance protection 23
6.5 Examples of protection of filters and capacitor banks 24
6.6 Shunt reactor protection 25
6.7 AC bus protection 25
7 Converter unit faults 27
7.1 General 27
7.2 Short circuits 27
7.3 Failure of converter unit to perform its intended function 29
7.3.1 General 29
7.3.2 Rectifier operation 29
7.3.3 Inverter operation 29
7.4 Converter unit protection 30
7.4.1 Converter differential protection 30
7.4.2 Overcurrent protection 30

AVA Documents
Document Sharing Hub

7.4.3 AC overvoltage protection ... 30
7.4.4 Protection against large delay angle operation ... 30
7.4.5 Commutation failure protection ... 30
7.4.6 Thyristor valve protections ... 30
7.4.7 Transformer protection ... 30
7.4.8 Transformer tap-changer unbalance protection ... 31
7.4.9 AC connection earth fault protection ... 31
7.5 Additional protection aspects of series connected converter units ... 31
7.6 Additional protection aspects of parallel connected converter units ... 31
8 DC reactor, d.c. filter and other d.c. equipment faults ... 34
8.1 General ... 34
8.2 Fault types ... 34
8.3 Protection zones ... 34
8.4 Neutral protection ... 35
8.4.1 General ... 35
8.4.2 Neutral fault detection ... 35
8.4.3 Neutral bus fault isolation ... 35
8.4.4 Bipolar neutral bus faults ... 35
8.5 DC reactor protection ... 36
8.6 DC harmonic filter protection ... 36
8.6.1 General ... 36
8.6.2 Filter bank fault protection ... 36
8.6.3 DC filter capacitor unit protection ... 37
8.7 DC harmonic protection ... 37
8.8 DC overvoltage protection ... 37
8.9 DC side switching protection ... 37
9 DC line faults ... 40
9.1 Overhead line faults ... 40
9.2 Cable faults ... 41
9.3 DC fault characteristics ... 41
9.4 Functional d.c. fault detection requirements ... 41
9.5 Protective sequence ... 42
9.5.1 Overhead line faults ... 42
9.5.2 Faults in cable systems ... 42
9.5.3 Faults in an overhead line/cable system ... 42
9.5.4 Faults in one of a system of parallel-connected cables ... 42
9.5.5 Fault in a system of parallel overhead lines ... 43
9.6 Fault protection schemes ... 43
9.7 Open circuit on the d.c. side ... 43
9.8 Power line cross protection ... 44
10 Earth electrode line faults ... 44
10.1 General ... 44
10.2 Specific requirements – Earth electrode line ... 44
10.3 Electrode line supervision ... 45
11 Metallic return conductor faults ... 45
11.1 Conductor for the return circuit ... 45
11.2 Metallic return faults ... 45
11.3 Fault detection – Metallic return ... 46
AVA Documents
Document Sharing Hub
Full document details: IEC TR 60919-2-2020

11.4 Metallic return fault protection systems 46
12 Insulation co-ordination – HVDC systems 49
12.1 General 49
12.2 Protection schemes using surge arresters 49
12.3 Switching overvoltages and temporary overvoltages on the a.c. side 50
12.4 Switching overvoltages and temporary overvoltages on the d.c. side 50
12.5 Lightning and steep fronted surges 50
12.6 Protective margins 51
12.7 Arrester duties 52
12.7.1 AC bus arresters (A_1, A_2 and A_3) 52
12.7.2 Arrester across filter reactors (FA) 52
12.7.3 Valve arresters (V) 53
12.7.4 Mid-point d.c. bus arrester (M) 53
12.7.5 Converter unit d.c. bus arresters (CB) and converter unit arresters 53
12.7.6 DC bus and d.c. line arresters (DB and DL) 53
12.7.7 Neutral bus arresters (E_1 and E_2) 54
12.7.8 DC reactor arrester (R) 54
12.7.9 DC filter arresters (FD) 54
12.8 Prevention of protective relay action due to arrester currents 54
12.9 Insulation clearances 54
12.10 Creepage distances for the insulation 54
12.10.1 Outdoor insulation 54
12.10.2 Indoor insulation 55
13 Telecommunication requirements 59
13.1 General 59
13.2 Specific requirements - Telecommunication systems 59
13.3 Consequence of telecommunication system outages 60
13.4 Special considerations for power line carrier (PLC) systems 60
14 Auxiliary systems 61
14.1 General 61
14.2 Electrical auxiliary systems 61
14.2.1 General requirements 61
14.2.2 Specific requirements 62
14.3 Mechanical auxiliary systems 63
Bibliography 65

Figure 1 – DC-side switches for an HVDC substation with series-connected converter unit 15
Figure 2 – Example of voltage dependent control characteristics 21
Figure 3 – Example of arrangement of a.c. filters and capacitor and reactor banks for large bipolar HVDC 25
Figure 4 – Example of current transformer arrangements for a.c. filters and a.c. bus differential protections 26
Figure 5 – Example of restricted ground fault protection of filter 26
Figure 6 – Example of current transformers arrangement for capacitor bank unbalance protection and overload protection of double tuned filter arm 27
Figure 7 – Examples of a.c. phase short circuits, pole short circuits and faults in a twelve-pulse converter unit 33

AVA Documents
Document Sharing Hub
Full document details: IEC TR 60919-2-2020

Figure 8 – Protection zones in series-connected converter units 33
Figure 9 – Protection zones in parallel-connected converter units 34
Figure 10 – Example of d.c. protection zones for series-connected converter units 38
Figure 11 – Example of d.c. protection zones for parallel-connected converter pole 40
Figure 12 – Monopolar metallic return system showing metallic return transfer breaker (MRTB) 47
Figure 13 – Monopolar operation of a bipolar system during converter pole outages 47
Figure 14 – DC current flowing into an a.c. system during a fault on a metallic return conductor when the HVDC substation mat is used for grounding of the d.c. circuit 47
Figure 15 – Earth current flowing during line faults 48
Figure 16 – Example of metallic return fault detection system by means of auxiliary a.c. signal 48
Figure 17 – Example of use of MRTB to quench fault to earth on metallic return conductor 49
Figure 18 – Example of an arrester protection schene for an HVDC substation 56
Figure 19 – Example of a d.c. arrester protection scheme for a back to back HVDC substation 57
Figure 20 –Example of an arrester protection arrangement for a capacitor commutated converter HVDC substation 58
Figure 21 – Example of an a.c. arrester protection arrangement for an HVDC substation 58
Figure 22 – Example of an arrester protection scheme in a HVDC substation with series-connected converters 59

Documents
Document Sharing Hub
Full document details: IEC TR 60919-2-2020

INTERNATIONAL ELECTROTECHNICAL COMMISSION

PERFORMANCE OF HIGH-VOLTAGE DIRECT CURRENT (HVDC) SYSTEMS WITH LINE-COMMUTATED CONVERTERS –

Part 2: Faults and switching

FOREWORD

1) The International Electrotechnical Commission (IEC) is a worldwide organization for standardization comprising all national electrotechnical committees (IEC National Committees). The object of IEC is to promote international co-operation on all questions concerning standardization in the electrical and electronic fields. To this end and in addition to other activities, IEC publishes International Standards, Technical Specifications, Technical Reports, Publicly Available Specifications (PAS) and Guides (hereafter referred to as "IEC Publication(s)"). Their preparation is entrusted to technical committees; any IEC National Committee interested in the subject dealt with may participate in this preparatory work. International, governmental and non-governmental organizations liaising with the IEC also participate in this preparation. IEC collaborates closely with the International Organization for Standardization (ISO) in accordance with conditions determined by agreement between the two organizations.
2) The formal decisions or agreements of IEC on technical matters express, as nearly as possible, an international consensus of opinion on the relevant subjects since each technical committee has representation from all interested IEC National Committees.
3) IEC Publications have the form of recommendations for international use and are accepted by IEC National Committees in that sense. While all reasonable efforts are made to ensure that the technical content of IEC Publications is accurate, IEC cannot be held responsible for the way in which they are used or for any misinterpretation by any end user.
4) In order to promote international uniformity, IEC National Committees undertake to apply IEC Publications transparently to the maximum extent possible in their national and regional publications. Any divergence between any IEC Publication and the corresponding national or regional publication shall be clearly indicated in the latter.
5) IEC itself does not provide any attestation of conformity. Independent certification bodies provide conformity assessment services and, in some areas, access to IEC marks of conformity. IEC is not responsible for any services carried out by independent certification bodies.
6) All users should ensure that they have the latest edition of this publication.
7) No liability shall attach to IEC or its directors, employees, servants or agents including individual experts and members of its technical committees and IEC National Committees for any personal injury, property damage or other damage of any nature whatsoever, whether direct or indirect, or for costs (including legal fees) and expenses arising out of the publication, use of, or reliance upon, this IEC Publication or any other IEC Publications.
8) Attention is drawn to the Normative references cited in this publication. Use of the referenced publications is indispensable for the correct application of this publication.
9) Attention is drawn to the possibility that some of the elements of this IEC Publication may be the subject of patent rights. IEC shall not be held responsible for identifying any or all such patent rights.

DISCLAIMER
This Consolidated version is not an official IEC Standard and has been prepared for user convenience. Only the current versions of the standard and its amendment(s) are to be considered the official documents.

This Consolidated version of IEC TR 60919-2 bears the edition number 2.2. It consists of the second edition (2008-11) [documents 22F/160/DTR and 22F/165/RVC], its amendment 1 (2015-06) [documents 22F/344/DTR and 22F/345A/RVC] and its amendment 2 (2020-04) [documents 22F/561/DTR and 22F/575/RVDTR]. The technical content is identical to the base edition and its amendments.

In this Redline version, a vertical line in the margin shows where the technical content is modified by amendments 1 and 2. Additions are in green text, deletions are in strikethrough red text. A separate Final version with all changes accepted is available in this publication.

AVA Documents
Document Sharing Hub

Full document details: IEC TR 60919-2-2020

The main task of IEC technical committees is to prepare International Standards. However, a technical committee may propose the publication of a technical report when it has collected data of a different kind from that which is normally published as an International Standard, for example "state of the art".

IEC 60919-2, which is a technical report, has been prepared by subcommittee 22F: Power electronics for electrical transmission and distribution systems, of IEC technical committee 22: Power electronic systems and equipment.

This edition includes the following main changes with respect to the previous edition:

a) this report concerns only line-commutated converters;

b) significant changes have been made to the control system technology;

c) some environmental constraints, for example audible noise limits, have been added;

d) the capacitor coupled converters (CCC) and controlled series capacitor converters (CSCC) have been included.

This publication has been drafted in accordance with the ISO/IEC Directives, Part 2.

A list of all parts of the IEC 60919 series, under the general title: *Performance of high-voltage direct current (HVDC) systems with line-commutated converters*, can be found on the IEC website.

The committee has decided that the contents of the base publication and its amendments will remain unchanged until the stability date indicated on the IEC web site under "http://webstore.iec.ch" in the data related to the specific publication. At this date, the publication will be

- reconfirmed,
- withdrawn,
- replaced by a revised edition, or
- amended.

IMPORTANT – The 'colour inside' logo on the cover page of this publication indicates that it contains colours which are considered to be useful for the correct understanding of its contents. Users should therefore print this document using a colour printer.

Documents
Document Sharing Hub

Full document details: IEC TR 60919-2-2020

PERFORMANCE OF HIGH-VOLTAGE DIRECT CURRENT (HVDC) SYSTEMS WITH LINE-COMMUTATED CONVERTERS –

Part 2: Faults and switching

1 Scope

This part of IEC 60919 which is a technical report provides guidance on the transient performance and fault protection requirements of high voltage direct current (HVDC) systems. It concerns the transient performance related to faults and switching for two-terminal HVDC systems utilizing 12-pulse converter units comprised of three-phase bridge (double way) connections but it does not cover multi-terminal HVDC transmission systems. However, certain aspects of parallel converters and parallel lines, if part of a two-terminal system， are discussed. The converters are assumed to use thyristor valves as the bridge arms, with gapless metal oxide arresters for insulation co-ordination and to have power flow capability in both directions. Diode valves are not considered in this report.

Only line-commutated converters are covered in this report, which includes capacitor commutated converter circuit configurations. General requirements for semiconductor line-commutated converters are given in IEC 60146-1-1, IEC 60146-1-2 and IEC 60146-1-3. Voltage-sourced converters are not considered.

The report is comprised of three parts. IEC 60919-2, which covers transient performance, will be accompanied by companion documents, IEC 60919-1 for steady-state performance and IEC 60919-3 for dynamic performance. An effort has been made to avoid duplication in the three parts. Consequently users of this report are urged to consider all three parts when preparing a specification for purchase of a two-terminal HVDC system.

Readers are cautioned to be aware of the difference between system performance specifications and equipment design specifications for individual components of a system. While equipment specifications and testing requirements are not defined herein, attention is drawn to those which could affect performance specifications for a system. Note that detailed seismic performance requirements are excluded from this technical report. In addition, because of the many possible variations between different HVDC systems, these are not considered in detail. Consequently this report should not be used directly as a specification for a specific project, but rather to provide the basis for an appropriate specification tailored to fit actual system requirements for a particular electric power transmission scheme. This report does not intend to discriminate the responsibility of users and manufacturers for the work specified.

Terms and definitions for high-voltage direct current (HVDC) transmission used in this report are given in IEC 60633.

Since the equipment items are usually separately specified and purchased, the HVDC transmission line, earth electrode line and earth electrode are included only because of their influence on the HVDC system performance.

For the purpose of this report, an HVDC substation is assumed to consist of one or more converter units installed in a single location together with buildings, reactors, filters, reactive power supply, control, monitoring, protective, measuring and auxiliary equipment. While there is no discussion of a.c. switching substations in this report, a.c. filters and reactive power sources are included, although they may be connected to an a.c. bus separate from the HVDC substation.

Documents
Document Sharing Hub
Full document details: IEC TR 60919-2-2020

2 Normative references

The following referenced documents are indispensable for the application of this document. For dated references, only the edition cited applies. For undated references, the latest edition of the referenced document (including any amendments) applies.

IEC 60146-1-1, *Semiconductor converters – General requirements and line commutated converters – Part 1-1: Specifications of basic requirements*
Amendment 1 (1996)

IEC 60146-1-2, *Semiconductor converters – General requirements and line commutated converters – Part 1-2: Application guide*

IEC 60146-1-3, *Semiconductor converters – General requirements and line commutated converters – Part 1-3: Transformers and reactors*

IEC 60633, *Terminology for high-voltage direct current (HVDC) transmission*

IEC 60071-1, *Insulation co-ordination – Part 1: Terms, definitions, principles and rules*

IEC 60700-1, *Thyristor valves for high-voltage direct current (HVDC) power transmission – Part 1: Electrical testing*

IEC TR 60919-1:~~2005~~2010, *Performance of high-voltage direct current (HVDC) systems with line-commutated converters – Part 1: Steady-state conditions*
Amendment 1:2013

IEC TR 60919-3:2009, *Performance of high-voltage direct current (HVDC) systems with line-commutated converters – Part 3: Dynamic conditions*

3 Outline of HVDC transient performance specifications

3.1 Transient performance specifications

A complete performance specification related to transient performance of an HVDC system during faults and switching should also include fault protection requirements.

These concepts are introduced at the appropriate locations in the following transient performance and related clauses:

– Clause 4 – Switching transients without faults
– Clause 5 – AC system faults
– Clause 6 – AC filter, reactive power equipment and a.c. bus faults
– Clause 7 – Converter unit faults
– Clause 8 – DC reactor, d.c. filter and other d.c. equipment faults
– Clause 9 – DC line faults
– Clause 10 – Earth electrode line faults
– Clause 11 – Metallic return conductor faults
– Clause 12 – Insulation co-ordination - HVDC systems
– Clause 13 – Telecommunication requirements
– Clause 14 – Auxiliary systems

Documents
Document Sharing Hub
Full document details: IEC TR 60919-2-2020

Discussion in the following clauses on the d.c. line, earth electrode line and earth electrode is limited to the relationships between these and either the transient performance or protection of HVDC converter stations.

3.2 General comment

In general, control strategies can be used to minimize the effect of disturbances, but when the safety of equipment depends on their correct performance, this should be identified.

4 Switching transients without faults

4.1 General

This clause deals with the transient behaviour of the HVDC system during and after switching operations both on the a.c. and the d.c. sides of converter substations, and is not related to equipment or line faults which are treated in the following clauses of this report.

Switching operations without faults can be classified as follows:

a) energization and de-energization of a.c. side equipment such as converter transformers, a.c. filters, shunt reactors, capacitor banks, a.c. lines, static var compensators (SVC), and synchronous compensators;

b) load rejection;

c) starting and removal from service of converter units;

d) operation of d.c. breakers and d.c. switches for paralleling of poles and lines; connection or disconnection of d.c. lines (poles), earth electrode lines, metallic return paths, d.c. filters, etc.

4.2 Energization and de-energization of a.c. side equipment

During the operating life of an HVDC transmission system, energization and de-energization of converter transformers, a.c. filters, shunt reactors, capacitor banks, SVCs, and other equipment may occur many times. Depending on the characteristics of the a.c. system and the equipment being switched, resulting current and voltage stresses will be imposed on equipment being switched and generally impinge as well on part of the overall a.c. system.

The overvoltages and overcurrents which are critical for plant design are usually due to faults (Clauses 5 to 9), and not to normal switching operations. Nevertheless, they are discussed here for completeness. They are relevant in consideration of disturbances to a.c. system voltages.

Filter switching will also result in transient distortion of the bus voltage. This could disturb the commutation process and in a weak system could lead to commutation failure.

Thus equipment switching should be investigated to:

– determine critical a.c. network and equipment conditions which may contribute to such abnormal stresses and actions which may be taken to mitigate them;

– design the equipment;

– verify arrester duties.

Transients occur routinely when filters and capacitor banks are switched as necessary to control harmonic interference and steady-state terminal voltages.

Because of the frequency of occurrence of switching overvoltages it is generally desirable that the overvoltage protective devices do not absorb appreciable energy during such operations. For example the amplitudes of overvoltages arising from routine switching operations can be

AVA Documents
Document Sharing Hub
Full document details: IEC TR 60919-2-2020

minimized by the use of suitable resistors incorporated in the circuit-breakers associated with filters and capacitor banks or by synchronizing the closing of the circuit-breakers. This can also reduce the possibility of inverter commutation failures. The HVDC control system can also be used effectively to damp certain overvoltages.

Restrike-free switching devices should be used for capacitor switching to avoid onerous overvoltages from restriking which otherwise could occur when disconnecting filters or capacitor banks.

Transformer energization inrush currents can cause an undesirable interaction in the a.c. and d.c. systems. When disconnecting a converter transformer from the a.c. network, the transformer should be disconnected maintaining the a.c. filters connected in parallel if possible, instead of disconnecting the transformer alone or by using synchronizing devices. In that way, residual saturation will be decreased, and inrush currents would be reduced. After some hundreds of milliseconds the filters could be disconnected from the transformer.

To reduce inrush currents, typical control measures include circuit-breaker pre-insertion resistors, using the synchronized circuit-breaker, or setting of the transformer on-load tap changers at their highest tap changer positions. Highest tap changer position refers to the tap changer position with highest number of winding turns. Synchronization requires switching at an optimum instant in each phase, i.e. breaker closing 90 degrees after voltage zero crossing. This implies that the three poles of a circuit-breaker cannot switch simultaneously. For breakers with one-pole operating mechanisms (and thus a separate synchronizing unit), this is not a problem. The synchronizing unit is simply programmed to give switching orders suitably separated in time to the poles. ~~Some breakers with three-pole operating mechanism can also be used for synchronized switching if the operating mechanism can be arranged to give a mechanical time delay.~~ However it should also be noted that saturation of already energized converter transformers can arise from energization of another transformer in the converter station or from switching of an SVC.

Also the application of low order harmonic filters can be helpful in reducing the problems with inrush currents. The effectiveness of such measures depends largely on the system and pertinent equipment characteristics. In addition, the response of the a.c. system can be sensitive to the number of converter transformers already energized, especially if they are not yet loaded as for series connections of multiple converter units.

Energization of capacitor and filter banks changes the system impedance characteristic. In case of system with relatively small short circuit capacity, adding capacitive component shifts high impedance peak of frequency-impedance curve to lower frequency side. If the high impedance peak becomes closer to second harmonic, severe overvoltages could be presumed during faults. To mitigate such situation, damping resister could be added to capacitors.

The energization of capacitor and filter banks produces oscillations between these elements and the rest of the network. Again, depending on the size of the banks and the network characteristics, switching overvoltages can appear along with overcurrents in the already energized a.c. system components.

Attention should be paid to the possibility of damage to the capacitors during re-energization of capacitors because of trapped charges in the capacitors from a preceding opening operation. Measures may be necessary for discharging them before reclosing if their internal discharge resistors are not sufficiently effective within the desired switching time. Alternatively, a longer switching time may be necessary.

Energization of filters excites the frequencies to which they, in combination with the a.c. network, are tuned. Also switching out of filter and capacitor banks can cause the a.c. system voltage to oscillate.

Documents
Document Sharing Hub
Full document details: IEC TR 60919-2-2020

SVCs can be provided to stabilize the voltage and control temporary overvoltages. Energization of SVCs should be such as to produce a light or even no transient in the system voltage. Most of them have an active control which can be used to accomplish this objective.

Connection or disconnection of shunt reactors and capacitors produces change in a.c. voltage. Size and operation of this equipment should be specified so as to limit switching-caused voltage changes to acceptable levels.

Energization and de-energization of a.c. transmission lines connected to HVDC sub-stations generate voltage transients as well, which should be taken into account. These operations change the a.c. harmonic impedances which also influence the transient harmonic effects.

Synchronous compensators can produce voltage transients when started and operated as induction motors, drawing reactive power and reducing the system voltage. This aspect of their performance should be carefully examined.

A table of acceptable levels of temporary or transient overvoltages and overcurrents during switching operations of the various system components or preferably a diagram of the expected transient overvoltage and overcurrent levels versus time should be developed for the specifications.

Related to the foregoing, information about the electrical characteristics of the a.c. system and its future development as complete as possible should also be supplied in the specifications. Relevant operating criteria along with existing and expected a.c. overvoltage levels should also be shown.

The desired performance of the HVDC substations under the transient conditions described in the foregoing subclauses should be stated for both switching in and out of the various components.

Overvoltage performance for the HVDC link should be co-ordinated with the actual performance characteristics of the existing a.c. network with which it is to be integrated.

4.3 Load rejection

Sudden reductions of transmitted power over the HVDC link without occurrence of faults could take place:

– due to unintentional tripping of the a.c. circuit-breakers at either terminal;
– due to blocking and bypass of converter units as a consequence of control system action;
– due to loss of generation and for a multitude of other possible causes.

Voltage levels on the a.c. system would rise primarily because of the consequent excess of reactive power compensation at the HVDC substation. Resonant conditions can be reached due to saturation of the power transformers and resonances between transformers, filters and the a.c. network. These overvoltage effects can be accentuated by frequency deviations in the a.c. system.

Special care ~~shall~~ should be taken for the case that the inverter becomes isolated from the a.c. system with only the filters and shunt capacitor banks connected to it.

For this contingency, the inverter ~~shall~~ should be blocked and bypassed to prevent overvoltage-caused damage to the filter components or the a.c. side arresters or the valve arresters. Opening of the remote end circuit-breakers, for a system with a single or only a few lines connecting the inverter to the a.c. system ~~shall~~ should be taken into account in the design of the protective scheme. It is also helpful to adopt fast and reliable telecommunication system for opening of the remote end circuit breakers.

Documents
Document Sharing Hub
Full document details: IEC TR 60919-2-2020

Load rejection transients following system faults are discussed in 5.3.5.

Acceptable load rejection-caused overvoltages, in terms of amplitudes and durations should be specified particularly if the resulting stresses are expected to be greater than those discussed in 4.2.

Suitable operating strategies to return to normal operating conditions should be developed. Among the procedures for achieving this are controlling the converter units still in service to regulate the system voltage or switching in reactors or by removal of capacitor or filter banks. If capacitor or filter banks are to be switched under overvoltage conditions this ~~shall~~ should be taken into account when fixing the associated circuit-breaker ratings and capabilities. In cases when an existing circuit-breaker of inadequate capacity could be called on to perform this duty, its operation should be inhibited and other means used to reduce overvoltages.

When converters are to be used for voltage control, consideration should be given to the design and manufacture of the valves for operation at large delay angles.

The extent to which converter measures can be used for reducing a.c. system overvoltage will depend on the requirements for continuity of supplied power to satisfy the a.c. system dynamic performance.

Other means, such as switched capacitors or reactors, synchronous compensators, SVCs, special metal oxide (MO) temporary overvoltage absorbers (TOV), etc. may need to be used to limit overvoltages to acceptable levels and to achieve the desired converter performance.

As in most system design decisions, economics will play a major role. However, trade-offs may be necessary between cost and system performance.

4.4 Start-up and shut-down of converter units

Normal operator-initiated start-up and shut-down procedures for an HVDC pole should be established.

Start-up and shut-down of series-connected converter units is performed by the control system sometimes in conjunction with the operation of switching devices in parallel with the converter units. For this purpose normally an automatic sequence is followed in which a valve bypass path within the bridge is activated before the opening or closing of the bypass switch.

For this procedure any special requirements or constraints such as the maximum allowable a.c. bus voltage variation, special interlock requirements or maximum variation in transmitted power, etc., should be specified.

Whether the system is to be operated with a smaller number of converters than in the ultimate configuration, particularly during the development stages of the project, should be noted.

4.5 Operation of d.c. breakers and d.c. switches

Switching devices have been used on the d.c. side of HVDC transmission systems for several functions as follows:

– by-pass and disconnect converter units;
– connect or disconnect the substation pole to the earth electrode line in bipolar links;
– connect poles or bipoles in parallel, including polarity reversal;
– switch the neutral bus-bar;
– connect or disconnect the d.c. line;

Documents
Document Sharing Hub
Full document details: IEC TR 60919-2-2020

– connect or disconnect d.c. filters;

– connect d.c. filters in parallel during monopolar operation.

They can be classified with respect to various aspects. Figure 1 gives an example of switching device arrangements on the d.c. side of a converter substation with the following meanings:

– current commutating switches (S);

– disconnectors (D);

– earthing switches (E).

Distinctions should be made between:

– devices which are used for opening at zero current, even though they may have limited making and breaking capability;

– devices which are able to transfer the current from one current path to a parallel one; such devices shall have an adequate energy absorption capability for the expected current interruption during the transfer;

– and d.c. breakers which are able to interrupt any d.c. current within their ratings and withstand the following recovery voltage.

In the future, d.c. breakers may be used in order to allow an unrestricted paralleling or de-paralleling of substation or d.c. line poles. A special application of the d.c. breaker is the metallic return transfer breaker (MRTB).

Zero current operated switches and d.c. circuit-breakers with a current interrupting capability not exceeding the load current shall be co-ordinated with the control system actions under both fault conditions and during operating sequences. For example, substation or line pole paralleling and de-paralleling operations require the opening and closing of various switches.

These operations initiate a wide variety of voltage and current transients and such functions are performed during established operating sequences as determined by the d.c. controls.

Thus, the transients depend on the control system, on the switch operating times and the a.c. and d.c. system electrical characteristics.

For a two-terminal system where reliability requirements are stringent, the use of d.c. circuit-breakers offers the possibility of enhancing transmission reliability and availability by the use of transmission lines in parallel and sectionalized along their routes. This would permit isolation of one of the parallel lines or line sections either in the case of a permanent fault or for operating needs without even a momentary shut-down of the d.c. transmission.

Thus maximum transmission capability within the thermal limits of the remaining healthy circuit could be maintained. Of course, selective protections as in the case of parallel a.c. lines would need to be used.

The operating characteristics including speed requirements should be determined and specified for all switches and circuit-breakers required for the contemplated HVDC transmission.

When specifying d.c. switching devices, the following duties shall be defined:

– the function within the HVDC substation;

– modes of operation;

– operation time requirements;

– continuous current;

Documents
Document Sharing Hub

Full document details: IEC TR 60919-2-2020

- current on opening;
- current on closing;
- voltage on opening;
- voltage across open contacts;
- voltage to earth in the closed and in the open position;
- maximum energy absorption for one commutation (or for two or more commutations depending on rating criteria);
- lightning impulse withstand level to earth;
- lightning impulse withstand level across open breaker;
- switching impulse withstand level to earth;
- switching impulse withstand level across open breaker.

In the event of a low impedance fault to earth on the d.c. side of one pole, at least one neutral switch should be able to transfer the current injected into the earth from the operating pole.

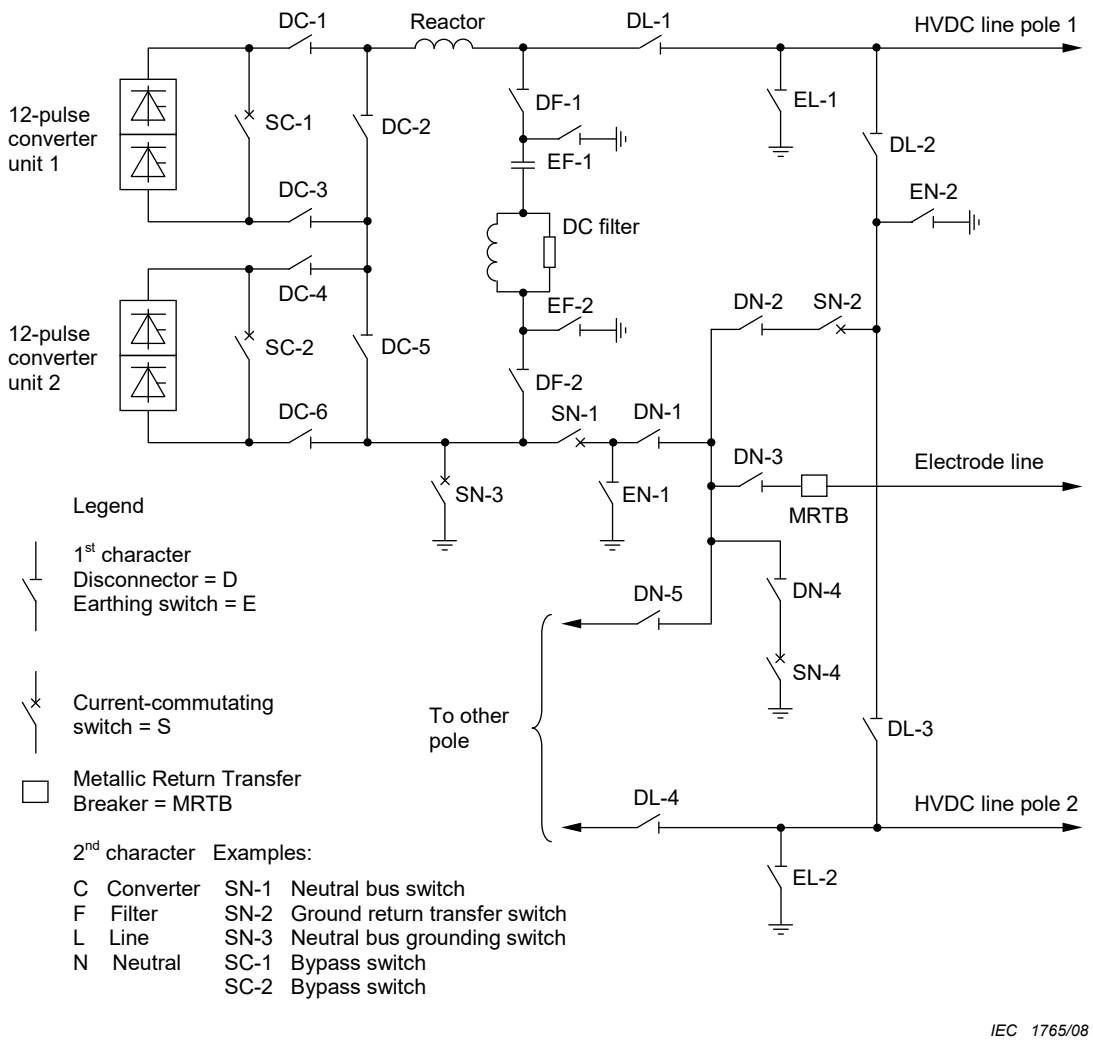

Figure 1 – DC-side switches for an HVDC substation with series-connected converter unit

Documents
Document Sharing Hub
Full document details: IEC TR 60919-2-2020

5 AC system faults

5.1 General

Transient performance of an HVDC system during a.c. system faults and during the recovery period immediately following fault clearing are important considerations in the specification and design of such a system. Recovery performance as influenced by implementation of specific control strategies will directly affect the ratings of the HVDC equipments, the connected a.c. substation facilities and the connected a.c. network response.

5.2 Fault categories

The following a.c. faults should be considered when preparing an HVDC system specification:

– sending end (rectifier) and receiving end (inverter) faults for each power flow direction;

– three-phase to earth and single-phase-to-earth faults at the HVDC substations;

– a.c. faults remote from the HVDC substations; reclosing practices should be considered;

– various faults as above in a.c. or d.c. lines in cases where there is a parallel a.c. line closely coupled to the d.c. line. The extreme case of this type is a flashover from an a.c. to a d.c. conductor where a.c. and d.c. lines cross.

HVDC specifications concerning transient performance during and after a.c. system faults should consider all affected areas of the d.c. and a.c. system operation and equipment ratings. To achieve an optimum balance between total system costs and performance, trade-offs should be considered in the HVDC specifications.

Characteristics that influence transient performance during and after a.c. system faults are discussed in the following paragraphs.

5.3 Specification matters affecting transient performance

5.3.1 Effective a.c. system impedance

In its simplest form effective a.c. system impedance is usually expressed as the short-circuit-ratio (SCR), that is, the ratio of the a.c. system short-circuit MVA to converter d.c. power (MW) rating.

However, SCR is more precisely expressed as a.c. system admittance on a base of rated d.c. power and a.c. voltage. This is defined at system frequency and should include an angle. For many studies the total admittance seen by the converter is relevant, including that of filters and other reactive power elements connected to the HVDC substation a.c. bus; this is known as effective short-circuit ratio (ESCR). Most significant are the impedances at the low-order harmonic frequencies.

SCR as defined here differs from the ratio RSC defined in IEC Publication IEC 60146-1-1 where the base is the rated MVA of the converter.

Transient fault performance factors affected by the SCR are:

a) power transfer during faults to maintain stable operation without commutation failures;

b) recovery time, especially for inverter end faults;

c) control of post-fault recovery voltages within acceptable limits;

d) possible low frequency resonance conditions, i.e., < 5th harmonic;

e) temporary overvoltages.

All of these factors become more pronounced with increases in the a.c. system impedance and phase angle.

AVA Documents
Document Sharing Hub

Full document details: IEC TR 60919-2-2020

5.3.2 Power transfer during faults

The HVDC system may be sensitive to relatively remote a.c. system faults where a.c. voltage changes at the HVDC a.c. buses are not large.

Voltage depression and distortion associated with a.c. faults affect the delay angles of the converters and cause a reduction in the transmitted d.c. power. For remote three-phase faults the power loss is essentially proportional to the a.c. voltage drop, down to a level of d.c. voltage where some form of voltage dependent control possibly needs to be imposed, as discussed in the following paragraphs. A further power reduction can take place as a result of a control mode shift as described in 5.3.8.

Voltage dependent control provides a means to modify the current limits or orders of the converters at each terminal in a co-ordinated manner without loss of current margin. The d.c. voltage at each end represents a common signal to both the rectifier and inverter terminals for co-ordination without the necessity for other communications. There are a variety of such controls; an example characteristic is shown in Figure 2.

In case the converters are used for reactive power control, the input voltage for the voltage dependent control should be the a.c. bus voltage.

System studies should be made to determine optimum settings for d.c. or a.c voltage thresholds, current limits, and time constants or ramp rates, if any, for each system.

For a.c. single phase-to-earth faults to or near the rectifier terminal, the reduction in power transfer for modern converters is also approximately proportional to the average a.c. voltage drop, since delay angle unbalance can be readily incorporated to compensate for large a.c. voltage dissymmetries.

On the other hand, for most inverter control strategies using equidistant firing schemes, the earliest firing time which is set to minimize commutation failures, fixes the firing time for all valves. This control action in conjunction with voltage dependent control normally results in minimum power transfer during a.c. single-phase inverter end faults. Strategies that transfer to individual-phase control operation during inverter end a.c. line-to-earth faults offer one means for increasing the power transfer from the aforementioned minimum without experiencing an excessive number of commutation failures.

To achieve both stable power transfer as much as possible and avoiding commutation failure during faults, optimized control of margin angle can be applied. For example, direct or indirect margin angle detection of the thyristor valve can be implemented and applied to closed loop margin angle control. If system requires, these function can be specified.

Power transfers achievable under a.c. fault conditions depend largely on the characteristics of the HVDC system under consideration and therefore can best be determined by digital and/or simulator studies.

5.3.3 Recovery following fault clearing

The recovery time can be defined as that time required after the fault clearing for the HVDC system to recover to a specified level of the prefault power, typically to 90 %, with the overshoot and settling time being specified.

HVDC system recovery times can be fast, e.g. 50 ms to 100 ms, with modern control systems for all non-permanent a.c. faults at the rectifier or inverter for low impedance a.c. systems. In practice however many HVDC systems being designed or installed are connected to high impedance a.c. systems at either HVDC substation. In such case, recovery times can be several times longer than for HVDC systems connected to low impedance a.c. systems. Long recovery times can also be expected for HVDC systems making use of long d.c. cables and very long d.c. overhead lines.

AVA Documents
Document Sharing Hub

Full document details: IEC TR 60919-2-2020

Recovery time settings shall take into consideration the a.c. system stability characteristics for both primary and possible backup fault clearing times.

However factors such as the necessity to minimize commutation failures or post fault recovery voltages often influence the actual recovery time implemented in a d.c. system control strategy.

Recovery can often be improved by maintaining, if possible, the d.c. current flowing even at a reduced magnitude by firing the valves during severe a.c. single-phase-to-earth and three-phase faults. Valve firing during the period of the fault or resumption of firing immediately upon fault clearing can also reduce the magnitude of recovery voltages and improve stability.

Specifications should indicate the expected duration of single-phase-to-earth and three-phase faults, including most likely backup clearing times, for which fast recovery capability of the HVDC system should be provided. This is important because some valves shall be designed with sufficient energy storage for the gating circuits to ride through expected fault periods.

5.3.4 Reactive power consumption during fault and post-fault recovery periods

Reactive power consumption of the HVDC substation during and after a.c. faults depends on its control strategy. Voltage dependent current limits with tailored characteristics are often utilized to modify the reactive power consumption as a function of voltage and to improve the inverter's ability to recover without commutation failures.

Strategies may be adopted for the remote unfaulted HVDC substation and where practical at the faulted substation to continue reactive power consumption or voltage support at a level to maintain a.c. bus voltages within prescribed limits.

During commutation failures, significant variations occur in reactive power flow. Persistent commutation failure in converters followed by protective action result in reactive power flow being rejected into the a.c. system which can lead to substantial overvoltages on high impedance systems.

HVDC system studies are important to determine the required means to control voltages at the a.c. bus and to maintain commutation as well as stability of the interconnected a.c. networks.

5.3.5 Load rejection due to a.c. faults

Fault conditions which can result in converter blocking, tripping of loads, failures to deblock upon clearing of three-phase faults and severe commutation failures, all result in forms of load rejection which can initiate large temporary overvoltages, ferroresonance, and a.c. system instabilities which can cause system collapse.

In addition on some a.c. systems careful attention shall be given to the possibility of large d.c. load rejections leading to self-excitation of generators or synchronous compensators at or electrically near the HVDC substation.

Load rejection overvoltages will have a direct impact on ratings of the HVDC equipment.

Studies should be carried out to assess:

– the extent to which existing equipment in the a.c. network can withstand these overvoltages and to design necessary corrective measures;
– design requirements for the HVDC substation equipment including any needed a.c. protection to satisfactorily withstand such load rejection overvoltages.

AVA Documents
Document Sharing Hub

Full document details: IEC TR 60919-2-2020

While not blocking, the converter can be used to help limit overvoltages. However consideration shall be given to the possibility of converter blocking during a.c. system faults with subsequent failures to recover. Such contingencies may indicate the need for other measures such as high speed switching devices for reactive power equipment, static var compensators (SVC), low order damped filters or protective energy dissipation devices to control load rejection overvoltages.

The specifications should state the acceptable overvoltage magnitudes and durations for the above contingencies.

5.3.6 Switching of reactive power equipment

Switching of reactive power equipment such as a.c. filters and shunt capacitor and shunt reactor banks is a common strategy at the a.c. terminals of HVDC substations for control of harmonic interference and steady-state terminal voltages, the latter as a function of a.c. system loading or of the primary a.c. system voltage.

When specifying the switching device to switch filters, shunt reactors or shunt capacitor banks, attention shall be given not only to the normal steady-state interrupting capability and speed, but also to the overvoltage requirements which may result from a.c. fault clearing and large load rejection.

Further complications may become apparent if an existing reactive power switching device is inadequate for safe interruption during temporary load rejection overvoltages, in which case provision shall be made for a backup breaker of adequate capacity to enable disconnection of excess reactive power sources.

~~Another consideration is that the use of switching devices can result in objectionably long restart times for the HVDC system if the switched reactive power equipment must be reinserted before the HVDC system may be loaded to prefault levels.~~

5.3.7 Effects of harmonic voltages and current during faults

Multiple cycle commutation failures or misfires occurring during an a.c. fault or the recovery period may cause currents and voltages at low-order non-characteristic harmonics and excite other frequencies, on the a.c. and d.c. sides. These may temporarily excite resonances in the a.c. or d.c. systems, but the resulting currents and voltages normally are not excessive, partly because of the damping provided by modern control systems. However, such effects should be studied to check the effect on, for example, filter transient ratings, and possible misperformance of a.c. system protective relays.

If the d.c. side is resonant at the fundamental frequency, saturation of the converter transformers can occur. This would add to any second harmonic on the primary and cause possible system instability. Also an a.c. single-phase-to-earth fault near the rectifier terminal injects large second harmonic voltages on the d.c. side that will remain as long as firing continues. Because of these considerations it is advisable to study carefully the possibility of any resonance of the d.c. line to this harmonic.

Harmonics generated during faults should be taken into account in the design ratings for the a.c. filters and in determining the inverter's ability to commutate during fault recovery periods.

A further problem which should be carefully examined is possible misoperation of the a.c. protection due to low order harmonics during a.c. faults. In this case that digital type relays were used, misoperation could be prevented for some degree of harmonic component. However, it should be taken into account that existing relays of old type do not have immunity to harmonics.

Documents
Document Sharing Hub

Full document details: IEC TR 60919-2-2020

5.3.8 Shift in control modes of operation

Changes in operating modes, that is, to power or current control mode for example, may be necessary during a.c. fault conditions. Shifts from rectifier current control to inverter current control lead to a power reduction that require a current order adjustment to correct for the power loss. Also co-ordination of current margins with and without end-to-end communications and changes in reactive power demands with current margin correction should be investigated.

In some high impedance a.c. systems, unstable operations during fault-initiated transients can appear in the power control mode unless a switchover is made to current control, or the power control mode is made to assume constant current control mode characteristics.

5.3.9 Power modulation on the HVDC system

AC system transient stability and HVDC fault recovery performance sometimes can be improved by the use of power, direct current or direct voltage modulation. This option will be discussed in IEC 60919-3.

5.3.10 Emergency power reductions

During fault conditions resulting in critical a.c. line outages, capability for emergency power reductions or even power reversals may be required as a contingency option to mitigate a.c. system instability. The specifications should consider the impact of such control actions on:

– possible overvoltages or destabilization of the a.c. system connected to the opposite end substation as a result of the partial load rejection;
– communications time requirements to co-ordinate the emergency reductions plus post-fault power increases and the impact of possible communications loss.

In some cases fault recovery from a.c. faults may permit operation of the d.c. system at a reduced power level until other restorative actions have been accomplished as determined by appropriate system studies.

5.4 Specification impact on control strategy

Because of the wide range of a.c. system conditions that shall be considered in determining optimum transient performance during a.c. faults and during the recovery period following fault clearing, no single control strategy will be appropriate for all cases. Each system shall be optimized around specified reference conditions as determined by digital computer and/or analog simulator studies for that particular system.

Performance specifications should permit d.c. control strategies which achieve an optimum compromise between maintaining power transfer and the prevention of commutation failures, instabilities or excessive recovery voltages, provided that the overall result is a satisfactory solution for the interconnected a.c. system.

Documents
Document Sharing Hub
Full document details: IEC TR 60919-2-2020

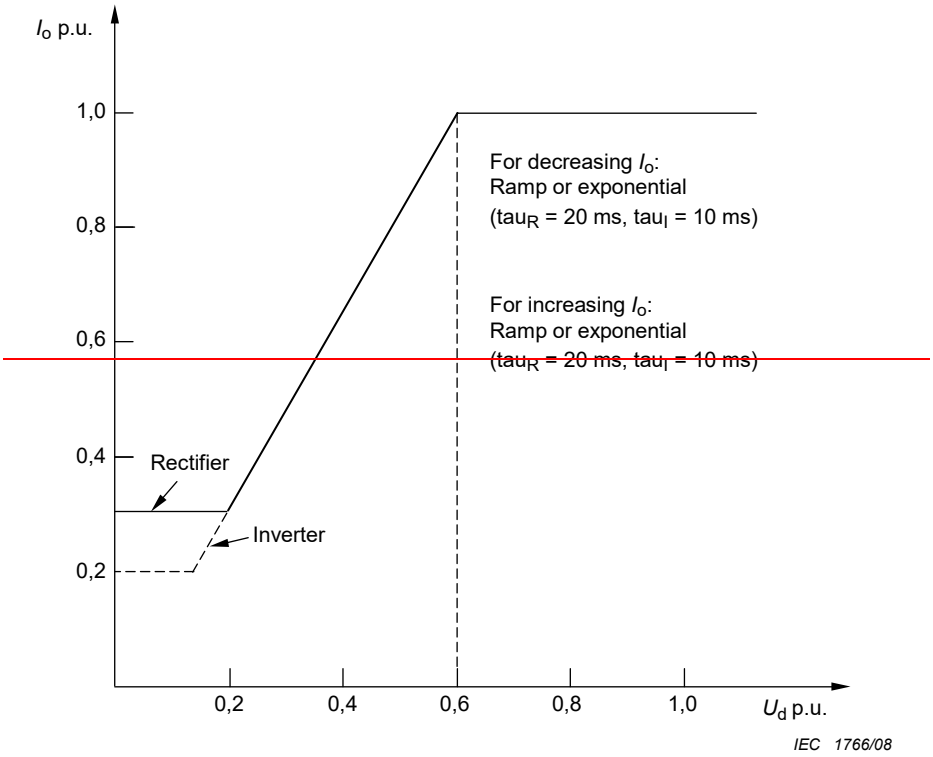

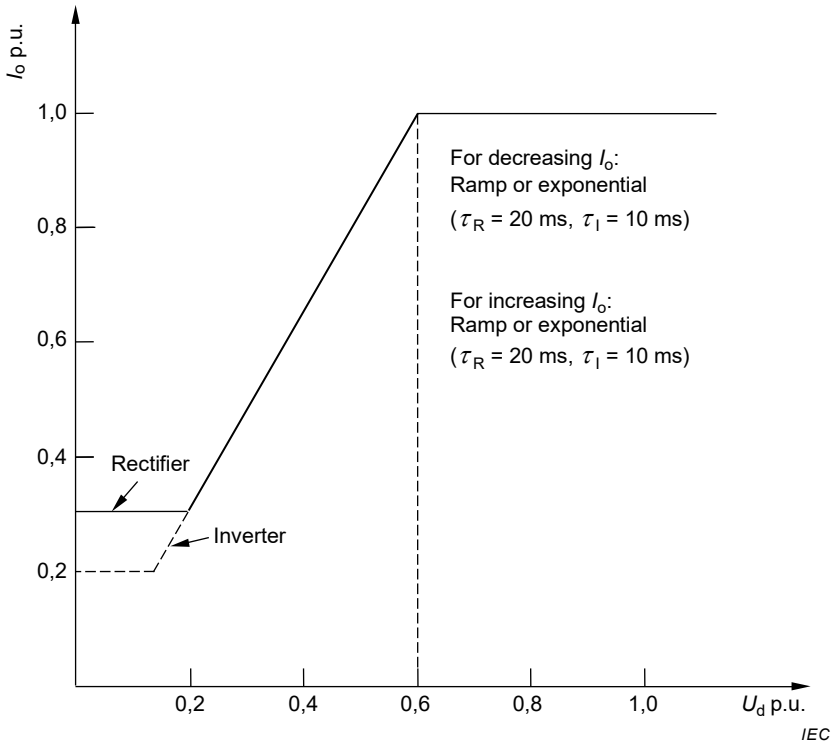

Key

U_d	d.c. voltage
I_o	current order
~~tau_R and tau_I~~ τ_R and τ_I	rectifier and inverter time constants, respectively

Figure 2 – Example of voltage dependent control characteristics

Documents
Document Sharing Hub
Full document details: IEC TR 60919-2-2020

6 AC filters, reactive power equipment and a.c. bus faults

6.1 General

This clause discusses faults in a.c. harmonic filters, in reactive power equipment and faults on the a.c. busbar. Relatively high levels of harmonic currents which may appear in these items warrant a discussion of protection aspects. This is included. Specific fault protection aspects of SVCs are not covered in this technical report.

An example of the arrangement of a.c. filters and shunt capacitors for a bipolar HVDC scheme is shown in Figure 3. The individual capacitor, reactor, and filter arms of the banks may be energized and de-energized by means of sub-bank circuit-breakers, the earth faults within the individual arm shall also be cleared by the sub-bank circuit-breakers. The bank circuit-breakers will ~~only~~ operate when sub-bank circuit-breakers fail to open the circuit successfully. An alternative arrangement, sometimes used is to connect the filter and the capacitor and reactor banks via tertiary windings on the converter transformers.

The fundamental and harmonic frequency impedances of the filters and the reactive power banks have a major influence on the amplitude and waveshape of overvoltages occurring at the a.c. busbar. Therefore detailed representation of a.c. harmonic filters and reactive power banks is essential for studies of the busbar voltages during transient conditions.

6.2 Transient overvoltages in filter banks

During normal operating conditions most of the line-to-earth voltage will appear across the main capacitor of the filters, while the voltage across other filter elements is normally a small fraction of the line-to-earth voltage. However under transient conditions the prospective voltage across the filter reactors and resistors can be even higher than the normal line-to-earth voltage. Therefore surge arresters protection should be applied internally in the filters as discussed in Clause 12.

In addition to the overvoltages occurring routinely as a consequence of normal switching (see Clause 4), the filter components are likely to be subjected to lightning-caused over-voltages, switching surges and busbar or external close-in faults.

Since the filter capacitors exhibit low impedances to fast wavefronts such as from lightning discharges, the filter reactors and resistors will be almost directly exposed to any lightning overvoltages appearing on the a.c. busbar.

Switching surge overvoltages appearing on the a.c. busbars may be significantly magnified internally in the filters and the resulting component overvoltages may even exceed the a.c. busbar-to-earth voltage. Therefore the individual component overvoltages should be investigated during overvoltage studies. When the components are not directly protected by surge arresters, as is often the case for the main filter capacitors, they may need to be designed to withstand higher switching surge levels between their terminals than other directly protected equipment connected from the busbar-to-earth.

During unbalanced a.c. system faults, the converters, if not blocked, will generate low order harmonics of substantial amplitude. If filters for low order harmonics are used, the filter surge arresters may be required to absorb considerable energy under these conditions. Another energy stress condition to consider particularly for filter reactor surge arresters of the second or third harmonic filters (when such filters are provided), is during energization of large transformers electrically close to the filter bus such as at recovery from a close a.c. fault.

Severe overvoltages with fast front times can occur across the resistors and reactors within the filters if~~a~~ a flashover from the a.c. busbar-to-earth should take place in the HVDC substation. The prospective voltage amplitudes across these filter elements will be equal to the pre-flashover voltages across the main filter capacitor and the surge arrester energy absorption requirement can be high.

AVA Documents
Document Sharing Hub

6.3 Transient overcurrents in filter and capacitor banks

Under transient conditions peak currents in the filter components may be several times greater than the normal steady-state values.

In the event of a flashover from busbar-to-earth the capacitor banks will discharge energy into the fault. The current in this discharge will be limited by the stray inductance of the capacitor stack and its busbar connections and by the current limiting inductor if used. Similarly, where surge arresters are provided across reactors and resistors in a.c. harmonic filters, the capacitor discharge current can be high since it is only limited by the back e.m.f. of the protective device and by stray inductance.

Due consideration to these overcurrents should be given in the specifications of the components as well as of the protective circuits and the design of the earthing system. Thus capacitor fuses shall be capable of withstanding the discharge currents, and the operation of current transformers and protective relays should not be adversely affected nor should the protection be incorrectly triggered by transient currents which are within the capabilities of the filter components. These should be designed to withstand such discharges.

The analysis should consider the system configuration, including the filters and shunt capacitors, leading to the most critical stresses.

6.4 Capacitor unbalance protection

To achieve the desired harmonic performance and reactive power balance at all d.c. loadings the capacitor and filter banks are usually divided into a number of switchable arms. This means that the individual banks (arms) may be of relatively low MVar rating, i.e., the number of parallel elements in the capacitor banks would be small.

During the operating life of a capacitor bank, capacitor elements can fail and be disconnected by fuse operation. When internal fuses are used, their operation disconnects the individual internal faulty element, while external fuse operation will disconnect the complete capacitor cell.

Capacitor banks are often designed to have built-in redundancy which means that a limited number of capacitor element failures and the accompanying fuse operations will not overstress the remaining healthy capacitors in the bank. However fuse operations should be detected so redundancy can be restored in the bank at an early convenient opportunity.

One method of such detection is use of current unbalance relay protection. For this scheme each phase of the capacitor bank is connected in a bridge circuit, i.e. “H” connection. If an element fuse blows in one capacitor unit, the capacitance of the bridge arm, that contains this unit will decrease, causing an unbalance current in the bridge arm which is measured by the current transformer.

Another method of such detection is that each capacitor phase is subdivided into two closely equivalent parallel groups of capacitors. Sensitive current unbalance relays responding to the difference in current in the branches are utilized to detect small changes resulting from capacitor element failure and subsequent fuse operation.

An alternative procedure uses voltage sensing devices which measure the voltage at tapping points in each phase of the capacitor bank to detect changes caused by failed capacitor elements and fuse operations. An overvoltage relay is used to monitor the phase or sum of the intermediate tapping voltages.

For some applications two levels of unbalance detection are used. The first gives an alarm and permits manual de-energization of the capacitor bank and replacement of failed capacitor units as necessary to restore redundancy. The second level gives an automatic trip signal to ensure that the safety of the remainder of the capacitor bank is not compromised as a

AVA Documents
Document Sharing Hub

consequence of the loss of a large number of capacitor units or elements. Unbalance protection schemes assume an extremely low probability of the same degree of capacitor element failure simultaneously in two branches of a filter capacitor bank.

6.5 Examples of protection of filters and capacitor banks

Examples of protection arrangements for filters and capacitor banks for an HVDC system are illustrated in Figures 4, 5 and 6. The choice is usually based on individual utility experience and practices.

If redundancy is sufficient to allow a pole to continue to operate even with one filter out of service, it may be desirable to protect the filter arms individually, so that the faulty filter can be disconnected rapidly with minimum loss of transmission capability.

If loss of a filter means that the pole cannot continue operation, it may then be considered economical to provide protection only for the overall bank or to include the filters in the busbar protection zone. As another alternative to individual filter protection, some operational restrictions such as reduction in transmitted power could be considered.

To ensure that the appropriate protection characteristics are applied, contingency operation requirements for partial loss of reactive power sources should be studied and specified.

The presence of an earth or phase-to-earth fault within a given protection zone can be detected by a conventional differential current protection system as shown in Figure 4.

When filters are assigned their own individual protection zones, current transformers shall be provided in each phase on the a.c. busbar side and at the neutral side of the filter. When the filter bank is treated as a single protective zone, only one set of high voltage current transformers need be provided, situated in the a.c. busbar connections.

If tripping of the complete pole should be initiated when the filter bank is tripped, the filter bank could alternatively be incorporated in the overall pole differential protection scheme. However this will have the disadvantage of reduced automatic information for identification of the faulted bank.

Another zone protection scheme is the restricted earth fault protection shown in Figure 5. This uses current transformers in each of the three high voltage phase conductors and in the neutral connections to detect an earth fault in the protected zone.

It should be noted that if the surge arresters inside the filter banks are connected directly to the substation earth mat, the arrester surge current may be registered by the protection system as an unbalance current. The resulting probability of undesirable relay operations can be minimized by proper co-ordination or by including the arresters in the protection zone.

The current in the filter and capacitor banks will depend not only on the amplitude and harmonic content of the a.c. busbar voltage, but on the integrity of the filter and bank components themselves. The differential current schemes described above may not be sufficiently sensitive to detect all internal breakdowns in the filters. Some of these incipient types of failures may need to develop sufficiently so that they can be detected and cleared.

Overcurrents which result from abnormal a.c. busbar voltages often can be tolerated for limited times without excessive penalties in terms of lost equipment life. However the equipment should be monitored so that mitigative steps may be taken before such overloads exceed the limits imposed by the known margins inherent in the equipment. For this, protection can be obtained by measuring the current in each phase and using overcurrent and overload relays. To ensure adequate protection against these problems in an a.c. harmonic

AVA Documents
Document Sharing Hub

Full document details: IEC TR 60919-2-2020

filter it is often necessary to provide current transformers for individual elements of the filter as shown in Figure 6.

6.6 Shunt reactor protection

The protection arrangement for a shunt reactor applied at an HVDC substation for reactive power control is similar to that applied to a reactor or transformer as used in an a.c. transmission system.

6.7 AC bus protection

The converter a.c. busbar is normally protected by a differential protection system. Since resonances can exist between the a.c. filters and the a.c. system a high content of harmonic currents may be present in the busbar currents during fault recovery periods. The busbar protection system then shall operate correctly in the presence of these harmonic currents.

Another aspect of this protection which should be examined is its performance during temporary overvoltage conditions. Under some conditions the peak voltages of one polarity may be substantially higher than the other. This can result in unidirectional surge arrester currents. It shall be ensured that the current transformers do not saturate under these conditions since misoperations of the protection can otherwise occur.

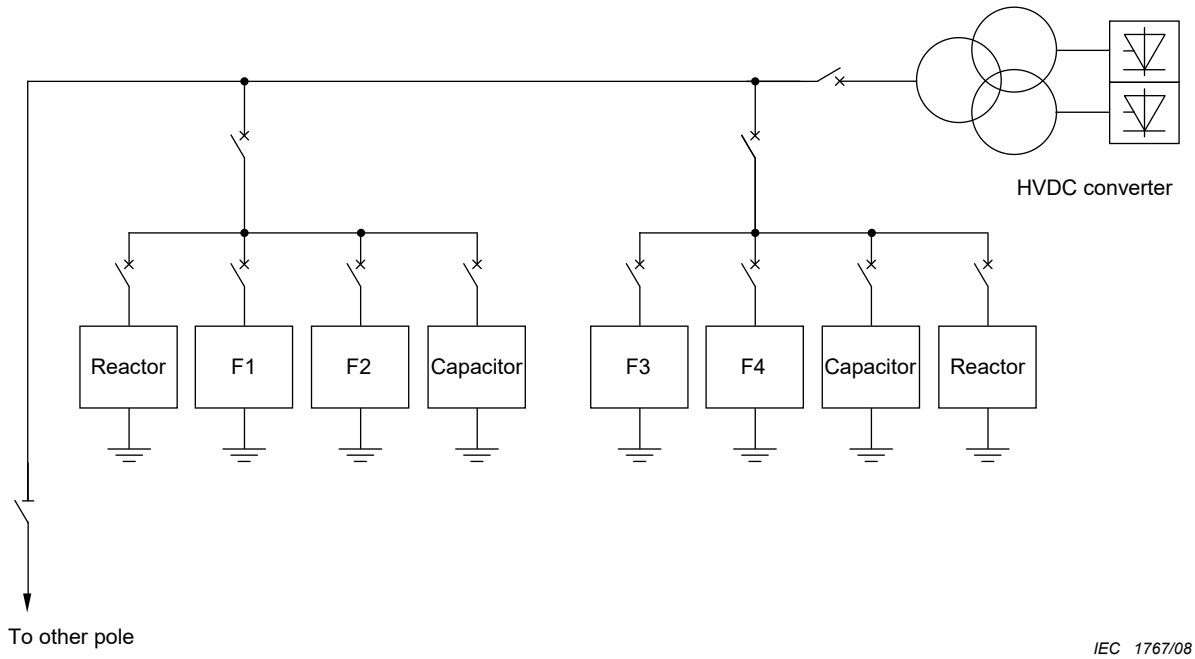

Figure 3 – Example of arrangement of a.c. filters and capacitor and reactor banks for large bipolar HVDC

Documents
Document Sharing Hub
Full document details: IEC TR 60919-2-2020

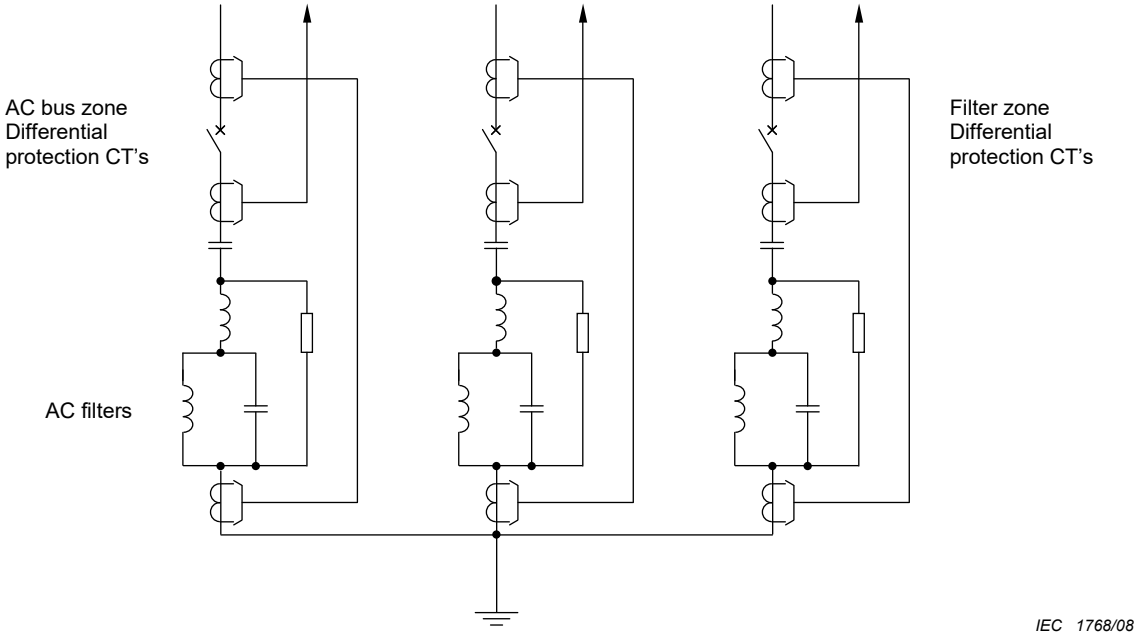

Figure 4 – Example of current transformer arrangements for a.c. filters and a.c. bus differential protections

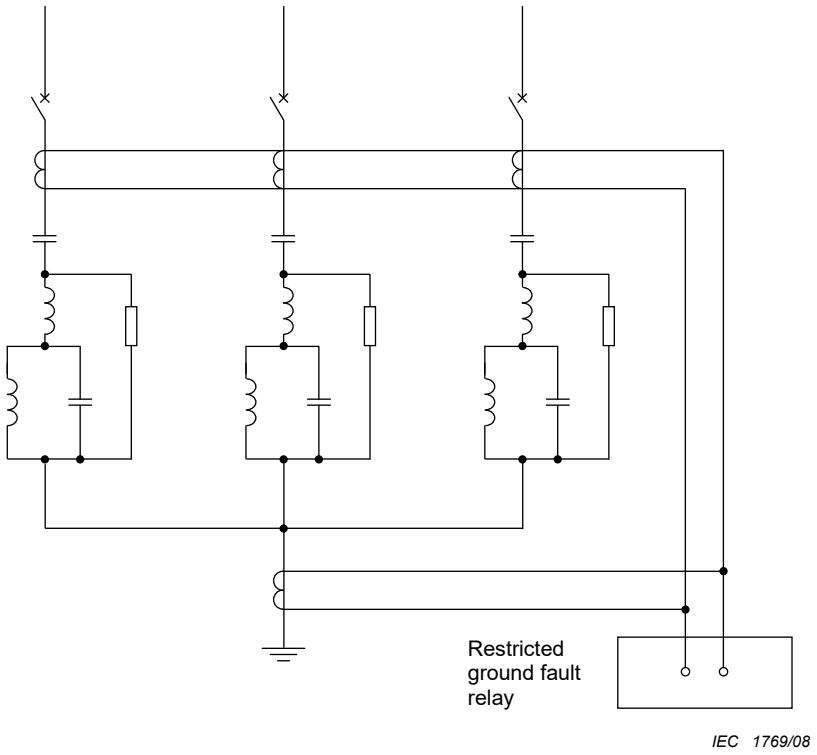

Figure 5 – Example of restricted ground fault protection of filter

Documents
Document Sharing Hub
Full document details: IEC TR 60919-2-2020

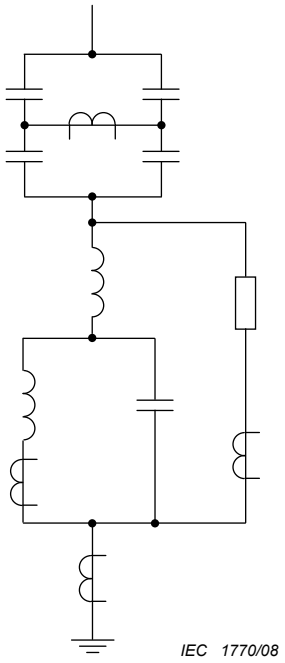

Figure 6 – Example of current transformers arrangement for capacitor bank unbalance protection and overload protection of double tuned filter arm

7 Converter unit faults

7.1 General

This clause discusses converter unit faults, i.e., those which take place between the ~~line~~ valve side of the converter transformers and the valve side of the smoothing reactor.

Electronic equipment external to the converter arms but functionally part of them (see IEC 60633), is included in the discussion as appropriate. Cooling equipment is discussed in Clause 14.

In some applications, converter units can be connected in series or in parallel on the d.c. side within one pole of the HVDC substation. Fault aspects of such configurations are also addressed.

Converter unit faults can be classified as:

a) flashovers or short circuits (see 7.2);

b) failures of the converter unit to perform its intended function (see 7.3).

Various protective circuits are usually built around the converter unit to detect faults and operating conditions that can be detrimental to the safety of the equipment, particularly the thyristor valves. Subclause 7.4 lists typical circuits some of which can be required only for particular valve designs.

7.2 Short circuits

Short circuits can be caused by breakdown of external or internal insulation, by inadvertent operation of switches or from other causes. They call for a shut-down of the affected converter unit because of the high probability of equipment damage and the need for repair or replacement.

Documents
Document Sharing Hub
Full document details: IEC TR 60919-2-2020

In bipolar systems or those comprised of two or more independent converter units per pole, the unaffected converter units and thus the remainder of the HVDC transmission system can remain operative after a short-circuit in a converter unit.

For example, Figure 7, shows a number of possible locations of short circuits within a typical converter unit. Faults within the converter transformer are not shown since they are not unique to the HVDC application. Figure 7 is valid for each individual converter unit in parallel or series-connected converter units.

Usually the most severe fault is a short-circuit of a converter valve while it is in rectifier operation at minimum delay angle and maximum a.c. voltage, e.g., due to a flashover. This would constitute a near-solid line-to-line short-circuit of the valve side winding of the converter transformer and subjects the conducting valve in the same commutating group to the fully offset short-circuit current. The possibility of a flashover of the transformer neutral to earth also shall be considered.

Other short-circuits on the d.c. side include short-circuits of a six-pulse bridge, of a twelve pulse group or from pole-to-earth. However due to the emf's and the impedances involved in these cases, they impose a somewhat reduced short-circuit current stress on the converter valves.

Upon detection of a short-circuit, perhaps by the differential protection within an HVDC thyristor valve converter, common practice requires immediate blocking of all gate pulses to prevent further commutation. The short-circuit current then extinguishes at its first zero crossing, generally within the first cycle following fault initiation. Subsequently the valves are subjected to the recovery voltage including any temporary overvoltages resulting from d.c. load rejection. The a.c. circuit-breaker of the converter unit is tripped simultaneously as a back-up. Due attention should be given to the breaker for operation under these circumstances because of the possibility of delayed current zero.

Stresses are most severe on the valve that has been carrying the short-circuit current because its thyristors have a higher than normal junction temperature when the recovery voltage is applied. The capability of a thyristor valve to withstand such stresses without damage and to block against the recovery voltage is termed fault suppression capability (see IEC 60700-1).

For any given system, the maximum valve fault current and thus the highest thyristor junction temperature are obtained with the maximum a.c. system fault current level including any contribution from the a.c. filters. On the other hand, the maximum recovery voltage including load rejection overvoltage is in general experienced with the minimum a.c. system fault current level.

Valves should be specified to have fault suppression capability for consistent levels of short-circuit current and recovery voltage. Breaker failure should also be considered. If three pole breakers are used and the breaker fails, the backup breaker might be opened after about 400 ms, and that time should be considered for valve design. If single pole breakers are used, and one breaker phase fails, the fault current will be interrupted anyway since most of faults are fed from two phases, and no extra time has to be considered for the valve design. If opening of the converter unit circuit-breaker is intended to provide back-up for fault suppression capability, the valves should be specified to have survival capability for the time period until the breaker clears.

For faults to earth, including fault B1, B2, B3~~ and B5~~ in Figure 7, valves not stressed by the fault current can experience fast changes of potential. Depending on circuit parameters, this may subject the converter valves to stresses equivalent to steep-fronted voltage surges. Specifications then should require that the converter unit equipment be designed and manufactured to withstand resultant stresses under credible fault conditions, as discussed in the foregoing, without damage.

Documents
Document Sharing Hub
Full document details: IEC TR 60919-2-2020

In the case of CCC, short circuit of the commutation capacitor will not give any decisive short circuit current for dimensioning of the main circuit equipment. For dimensioning of the varistor across the commutation capacitor, valve short circuit and commutation failures / a.c. system single-phase faults should be considered as the decisive fault cases. The number of consecutive commutation failures / a.c. system single-phase faults should be carefully considered as it may be dimensioning for the varistors. 2-phase or 3-phase faults between the CC and the valves would give enormous energy and it is not practically possible to dimension the varistor for such fault cases. If the station layout is such that those 2-phase or 3-phase faults cannot be disregarded, they should be considered for current dimensioning purposes only and not for varistor energy dimensioning.

7.3 Failure of converter unit to perform its intended function

7.3.1 General

The basic function of the converter unit is to cyclically commutate the direct current between the phases of the a.c. system. To perform this function, two conditions shall be fulfilled: sufficient commutation voltage shall be present; and synchronized cyclical gate pulses shall be generated by the converter unit control and transmitted to the valve firing circuits.

7.3.2 Rectifier operation

Usually reduction or distortion of the commutating voltage is of little concern because there is sufficient volt-time area to achieve commutation even for close-in single line-to-earth faults. If the three-phase voltage becomes too low for successful commutation the direct current may be reduced or the converter may be blocked. When the voltage reappears the converter should be able to resume operation with the shortest possible delay. This imposes a requirement on valve designs, where auxiliary energy for gating or thyristor protection is taken from the main circuit, in that the electronic circuits should be designed for fast recharging or have adequate energy storage capability.

Persistent failure of a valve to turn on, perhaps due to missing gate pulses, causes the fundamental a.c. voltage to be injected into the d.c. circuit. Depending on circuit parameters, this can lead to transformer saturation, excite possible resonances on the d.c. line, etc. possibly imposing severe stresses on the affected equipment. The specification should require that such faults be detected and appropriate actions taken (see 8.7).

7.3.3 Inverter operation

During inverter operation the absence of a sufficient commutating voltage-time area or of valve gate pulses results in commutation failure. This subjects the valve to overcurrents and introduces a fundamental a.c. voltage component into the d.c. circuit. Special control strategies such as advancing the delay angle, by-pass pair operation to eliminate fundamental a.c. voltages on the d.c. side, reduction of direct current, etc. are adopted to minimize commutation failures and their effects.

If the commutation failure is caused by insufficient a.c. voltage from an event such as an a.c. system fault (see Clause 5), then normal performance can be expected to resume once the fault has been cleared. To avoid shutdown of the converter, the valves should be designed and manufactured to withstand the stresses resulting from such events for a specified time assisted by the converter unit control. If the specified time is exceeded or if the commutation failure is caused by missing gate pulses then the converter should be blocked.

For valve designs where the auxiliary energy required for gating the thyristors is taken from the main circuit, the pertinent electronic circuits should be designed for fast recharging or they should have sufficient energy storage capability so that the converter can quickly resume normal operation after reappearance of the commutating voltage.

Documents
Document Sharing Hub
Full document details: IEC TR 60919-2-2020

7.4 Converter unit protection

7.4.1 Converter differential protection

By comparing the converter transformer valve side current to the direct current, short-circuits within the converter bridge can be detected. The resulting protective action is to permanently block the converter unit and trip the associated a.c. circuit-breaker.

7.4.2 Overcurrent protection

Evaluating the magnitude of the transformer valve side current makes it possible to protect against overload. This also provides backup for converter differential protection. Protective action is the same as that described in 7.4.1.

7.4.3 AC overvoltage protection

AC overvoltage protection can be included by measuring the a.c. voltage, for example at the valve side of the converter transformer using a capacitive voltage divider as in the transformer bushings or by other means. Protective actions after detecting an undesirable overvoltage might include tripping of capacitor banks, increasing the converter reactive power consumption, permanent blocking of the valves along with tripping of the converter unit a.c. circuit-breaker or an appropriate combination of these actions.

7.4.4 Protection against large delay angle operation

Protection against large delay angle operations can be achieved if required for a particular valve design by measuring the valve delay angles and limiting the duration of such operation in the converter unit control. The limitation should be made dependant on valve side voltage, direct current and the valve coolant temperatures.

7.4.5 Commutation failure protection

Commutation failure detection is usually achieved by a.c./d.c. current differential measurement. If recovery does not occur naturally, this acts after some delay to temporarily increase the inverter angle of advance. If no recovery occurs after a further delay, permanent blocking is applied.

7.4.6 Thyristor valve protections

Thyristor redundancy can be monitored by continuous on-line checking of each thyristor if required. Protective actions can include a warning signal, shut-down and isolation of the converter unit or a combination of these.

Thyristor forward overvoltage protection can be achieved by monitoring the individual thyristor voltages and applying a gating signal if the safe level is exceeded (see also 12.7.3) or by other means.

Forward recovery protection can be used to protect the thyristors against positive high voltage/time differential dv/dt in the recovery period by applying a gating signal if a safe level is exceeded, or by other means.

7.4.7 Transformer protection

Converter transformer protection is the same as conventionally used for transformers in a.c. transmission systems. It includes differential protection, overcurrent protection, gassing or hot spot detection, etc. Protective action is to trip the converter unit a.c. circuit-breaker. Precautions shall be taken to prevent direct current from flowing in the transformer, for example by bypass-pair operation and thus to assist the circuit-breaker clearing. This can be particularly important for series-connected converter units.

Documents
Document Sharing Hub
Full document details: IEC TR 60919-2-2020

Operation of overall differential protection for valve side earth faults is complicated due to the absence of a direct earth connection. The effects of harmonics upon the operation of the protection should be considered and in particular in the case of biased differential protection with harmonic restraint.

Special attention should be paid to the design and rating of current transformers used because of possible saturation problems. Problems of concern include for example, injection of direct current in conjunction with commutation failures, neutral bus faults, and delayed neutral bus switch operation (see Clause 11).

7.4.8 Transformer tap-changer unbalance protection

Tap-changer unbalance protection may be required to avoid unbalanced operation of the converter unit, in turn leading to generation of excessive non-characteristic harmonics. These can overload filters. Protective response is to give an alarm and initiate a manual or automatic tap changer rebalancing procedure.

7.4.9 AC connection earth fault protection

AC connection earth fault protection may be used to detect earth faults on the connections between the converter transformer and the valves (fault B1 and B2 in Figure 7), when the converter transformer is energized but the valves are blocked. The valve side voltages of the converter transformers can be measured by using capacitive voltage dividers in the transformer bushings or the valve hall bushings or by other means. Protective action can be tripping of the converter unit a.c. circuit-breaker.

7.5 Additional protection aspects of series connected converter units

When two or more converter units are connected in series on the d.c. side within one pole of the HVDC substation, protection for the same types of faults apply as for single converter units (see 7.3 and 7.4). One additional differential protection, to cover converter unit faults (type B5 in Figure 7), can be included, comparing the current in the high voltage side and in the low voltage side of the converter unit.

Since both converter units can be operated independently of each other, subdivision of the converter portion of the HVDC substation into protection zones should take this into account (see Figure 8). Protective action for short-circuits would generally include blocking of the pole to remove the direct current. If the fault is within the converter unit 1 or 2 zone, the respective unit then should be isolated and bypassed so that operation can be resumed with the remaining healthy unit. Consideration should also be given to removing one of the converter units from service at the other end of the transmission system to avoid prolonged operation at large delay angle or angle of advance, respectively.

For certain faults occurring only in one of the series connected converter units, such as transformer faults or commutation failures, protective sequences can be used in addition to fault removal to divert the direct current from the affected unit by bypass operation of the converter valves or by closing the bypass switch.

7.6 Additional protection aspects of parallel connected converter units

In general, each of the parallel-connected converter units can be treated independently from the point of view of transient performance and fault protection. However, due consideration should be given to the transient current rating of parallel-connected inverters with respect to commutation failures, especially if the inverters have differing steady-state current ratings. DC breakers may be desirable at the pole bus (see Figure 9), for isolation of faulty converter units, especially inverters, to avoid the need to temporarily block the complete transmission pole.

Documents
Document Sharing Hub
Full document details: IEC TR 60919-2-2020

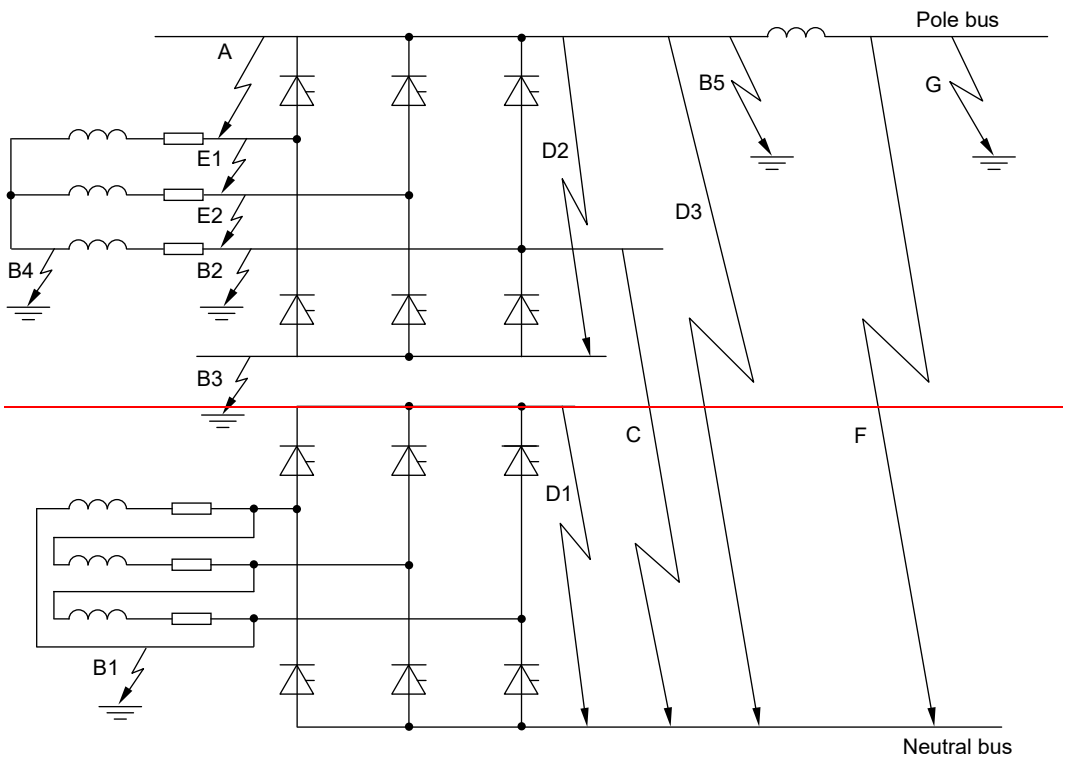

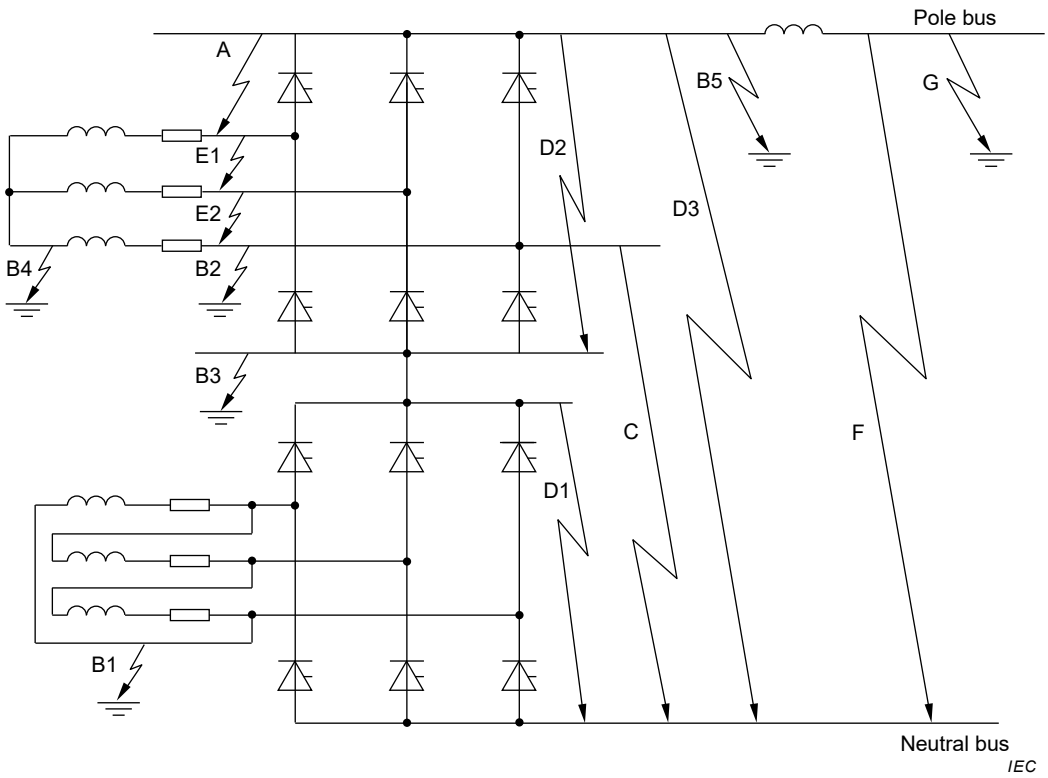

Fault list

A. Valve short circuit

B. Ground faults on:

1 valve side a.c. phase, D-bridge

2 valve side a.c. phase, Y-bridge

3 bus between 6-pulse bridges

Documents
Document Sharing Hub

Full document details: IEC TR 60919-2-2020

4 neutral point, Y-transformer

5 pole bus connection

C. Short circuit between neutral bus and valve side a.c. phase, Y-bridge

D. Converter short circuit

1 short circuit across lower voltage 6-pulse bridge

2 short circuit across higher voltage 6-pulse bridge

3 short circuit across 12-pulse bridge

E. AC phases short circuit

1 2-phase short circuit

2 3-phase short circuit

F. Pole to neutral bus short circuit outside the d.c. reactor

G. Pole bus to ground fault outside the d.c. reactor

Figure 7 – Examples of a.c. phase short circuits, pole short circuits and faults in a twelve-pulse converter unit

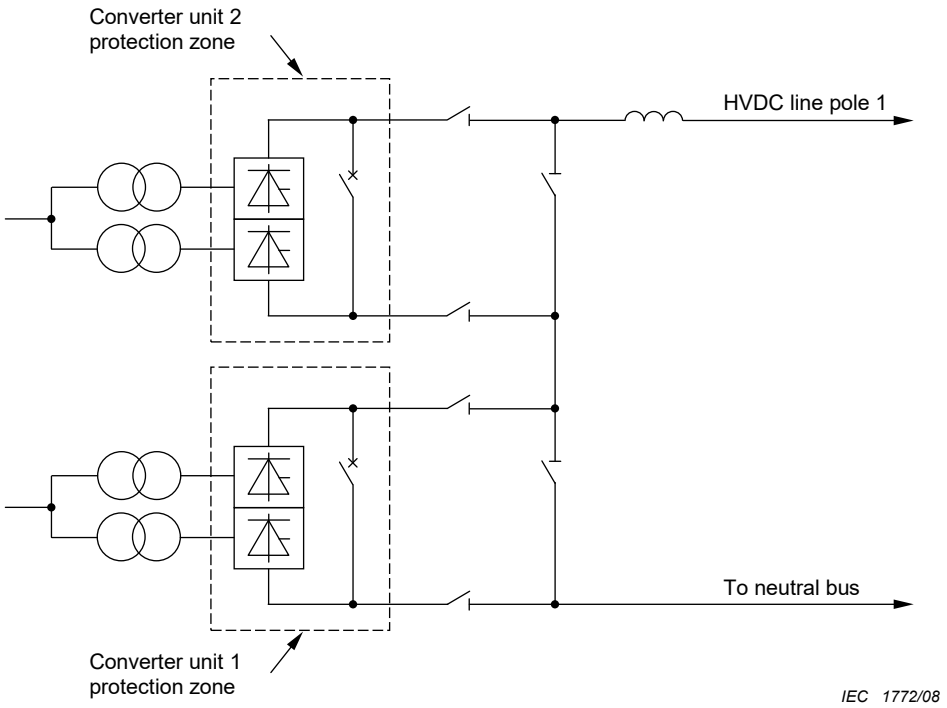

Figure 8 – Protection zones in series-connected converter units

Documents
Document Sharing Hub
Full document details: IEC TR 60919-2-2020

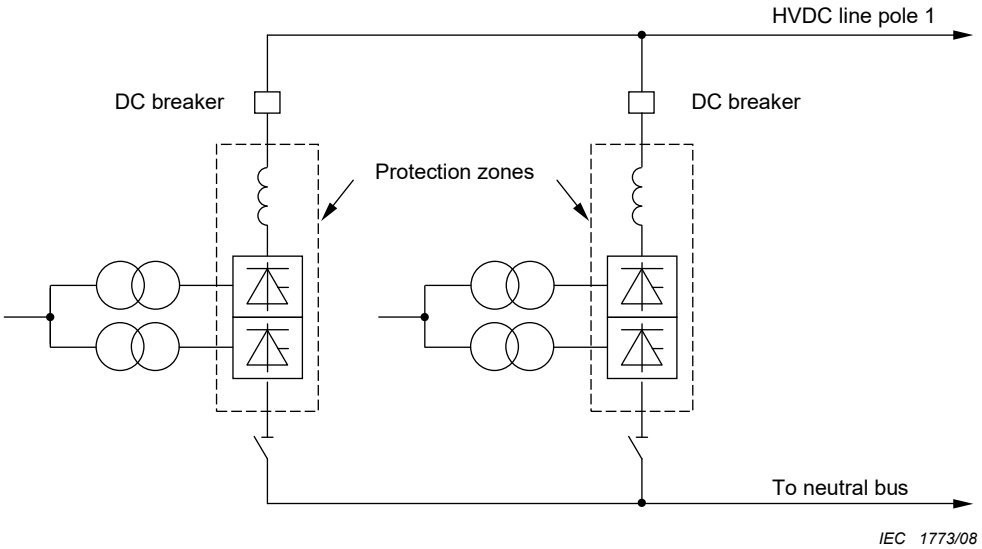

Figure 9 – Protection zones in parallel-connected converter units

8 DC reactor, d.c. filter and other d.c. equipment faults

8.1 General

This clause discusses faults in the HVDC substation for an HVDC transmission system bounded by:

a) the valve side of the d.c. reactor to the d.c. transmission line in each pole;

b) from the neutral side of the converter unit for each pole to the earth electrode line.

8.2 Fault types

Types of faults that should be considered for the protection of the d.c. side equipments and bus sections include:

a) bus-to-earth and bus-to-bus faults;

b) equipment faults;

c) failure of d.c. switching devices to perform their intended switching functions.

8.3 Protection zones

Specifications for HVDC substations should make provision not only for the protection of all d.c. side equipments, but also for the co-ordination of protections.

In HVDC systems the zone protection philosophy and techniques of implementation to achieve zones of protection are in general much the same as with a.c. protection practices. However, in HVDC systems the fault suppression capability of the converter valves (see Clause 7), in addition to the relatively high impedance of d.c. reactors and transformers aids in achieving protection selectively on the d.c. side.

Protection zones of an HVDC substation should be arranged such that all equipment is fully protected by at least one protective function within the HVDC substation. The adjacent zones should be overlapped in actual system in order to eliminate blind spots of protective scheme.

A communication system between substations of the HVDC transmission can be used to optimize recovery from faults and to improve fault protection selectivity for many faults which can take place on an HVDC transmission system. However it should not be necessary to

AVA Documents
Document Sharing Hub
Full document details: IEC TR 60919-2-2020

protection of the equipment under discussion in this clause. Figures 10 and 11, show examples of HVDC protection zones and measuring devices for two configurations of HVDC substations.

8.4 Neutral protection

8.4.1 General

In an HVDC system the neutral side protection is generally divided into zones that enable independent fault detection plus selective isolation by pole and a protective zone common to both poles. The latter requires a bipole shutdown to provide corrective maintenance.

8.4.2 Neutral fault detection

In a bipolar configuration operating under balanced conditions, the pole neutral protection zone, the bipole neutral protection zone and the earth electrode line protection zone (see Clause 10) are all essentially at earth potential. An earth fault in any of these zones would therefore not interfere with station operation under balanced bipolar conditions. Any d.c. fault current then would be practically zero.

Faults to earth in these neutral zones would be detectable whenever the poles of the bipole are temporarily unbalanced for any reason such as during startup, shutdown or disturbance on one pole. The HVDC specifications should consider use only of neutral zone alarms if the operation of both poles is expected to be reasonably balanced. This would allow operator decision on corrective actions to be taken based on safety considerations and the power transmission requirements at the time of fault detection.

The pole neutral and bipole neutral zones should be bounded by d.c. current transformers (d.c.-c.t.). A fault within the respective zones can be detected by a differential comparison of the currents as measured by the d.c.-c.t.'s at the zone boundaries during an unbalance operating condition between the two poles.

8.4.3 Neutral bus fault isolation

Faults to earth within the neutral zone or converter zone require a permanent stop of the pole for correction of the faulted condition.

The neutral bus switching device is utilized during the protection sequence to isolate the faulted pole and to transfer any residual pole current to earth return.

Current transfer requirements of the neutral bus switching device should consider the most onerous condition up to and including maximum healthy pole current and location of faults. The switch shall be capable of developing a voltage greater than the IR drop of the earth return to force the current transfer. For systems in which either earth return or on-line transfer to metallic return are not permitted, load break capability of the switching device may not be needed. In this case, a disconnector would be adequate.

In addition, the failure to open the neutral bus switching device of one of the poles will cause a bipole blocking.

8.4.4 Bipolar neutral bus faults

Bus faults within the bipolar neutral protection zone are detectable by differential comparison schemes such as discussed in 8.4.2. A neutral bus fault in this zone requires a bipole shutdown to provide corrective maintenance which could be a scheduled shutdown.

Documents
Document Sharing Hub
Full document details: IEC TR 60919-2-2020

8.5 DC reactor protection

The d.c. reactors of each pole can be either oil-insulated or dry type. Protection of oil type reactors utilizes many of the same techniques as are applied to a.c. transformers with due consideration to the fact that direct current quantities are involved in the operation of the protective devices.

Protection can include:

– pressure relief devices;
– oil temperature monitoring;
– oil level monitoring;
– gas sensing;
– winding temperature sensing;
– loss of cooling detection;
– differential protection.

Differential protection can be specified around the d.c. reactors or these equipments can be included in one of the HVDC substation protection zones as shown in Figures 10 and 11.

Oil type d.c. reactor bushing designs lend themselves to an economic solution to the problem of housing the d.c.-c.t.'s required for differential protection.

When dry type d.c. reactors are employed, separately mounted d.c.-c.t.'s will be needed for reactor fault detection.

8.6 DC harmonic filter protection

8.6.1 General

The d.c. filters associated with HVDC substations are normally specified to limit harmonic interference caused by harmonic currents flowing into the d.c. line (see IEC 60919-1, Clause 17).

Protection design for the d.c. filter arms should take into account the full range of normal and abnormal operating conditions which should be specified for the HVDC substations.

Similarly the protection design for the d.c. filter elements, such as capacitors, reactors, damping resistors, and disconnectors shall consider all expected operational conditions that result in filter elements being overstressed due to harmonic currents which for example can result from operation at large delay angles, angles of advance or from resonant conditions, etc.

8.6.2 Filter bank fault protection

DC filter capacitor bank faults to earth can activate the d.c. line pole protection. However the specifications should require that d.c. line protection operation should not prevent correct identification of any d.c. filter faults and should automatically initiate clearing and isolation of the faulted filter branch.

Any fault within the d.c. filter zone may be detected by a differential comparison between the d.c.-c.t.'s at the boundary of the line side d.c. substation zone as shown in Figures 10 and 11. Other equipment such as line traps, coupling capacitors, d.c. voltage dividers, etc. can also be included in this zone of protection.

Isolation of a faulted filter may require temporary blocking of the affected pole to permit disconnector operation.

AVA Documents
Document Sharing Hub

Full document details: IEC TR 60919-2-2020

If operation is to continue after removal of the faulted d.c. filter branch, the specification should consider the increased d.c. side interference levels expected, possible overloading of other filters and potential resonant conditions.

8.6.3 DC filter capacitor unit protection

Since capacitor banks associated with the d.c. filters normally consist of a combination of series and parallel elements, a variety of protection philosophies may be applied, namely:

– fuse protection (internal or external) if the fuses do provide useful protection;
– unbalance protection within a capacitor bank;
– monitoring of the state of filter tuning by on-line or off-line measurements to locate failures;
– visual or remote indication of failed units or voltage level from earth;
– separate failure alarms to indicate non-critical and critical levels of capacitor failures, including automatic removal of the filter arm if continued operation could result in an avalanche of capacitor failures.

8.7 DC harmonic protection

Protection against fundamental and harmonic frequency components on the d.c. side should be considered in the specification of any HVDC system. Fundamental frequency components on the d.c. side lead to a d.c. and second harmonic frequency component on the a.c. side which can cause transformer saturation or resonant conditions. The fundamental frequency can be detected in the voltage divider or d.c.-c.t. signals. The related harmonic protection normally initiates pole blocking whenever the harmonic component exceeds a given threshold value for a specified time.

8.8 DC overvoltage protection

Specifications for HVDC substations should consider d.c. side overvoltage protection to assure that all equipments and the d.c. line or cable are protected against steady-state overvoltages. Transient overvoltage protection can be addressed as part of the arrester co-ordination (see Clause 12). Normally converter controls are utilized to implement d.c. system steady state overvoltage protection functions.

8.9 DC side switching protection

Switching devices such as high speed pole circuit-breakers and d.c. side disconnectors, including d.c. filter and pole disconnectors, shall be covered in the specifications. Specification of these switching devices shall consider current interrupting or commutation capability. In addition, permissible switch arcing time without unacceptable equipment damage shall be considered.

The disconnectors usually operate at no-load and their operating supervision should be provided either by the equipment or by other associated protection. The on-load switches, such as the by-pass breakers, should have a dedicated protection.

Documents
Document Sharing Hub
Full document details: IEC TR 60919-2-2020