IEC TR 61243-6

Edition 1.0 2017-03

TECHNICAL REPORT

colour inside

Live working – Voltage detectors – Part 6: Guidelines on non-contact voltage detectors (NCVD) for use at nominal voltages above 1 kV AC

IEC TR 61243-6:2017-03(en)

Documents
Document Sharing Hub

Full document details: IEC TR 61243-6 2017

THIS PUBLICATION IS COPYRIGHT PROTECTED

Copyright © 2017 IEC, Geneva, Switzerland

All rights reserved. Unless otherwise specified, no part of this publication may be reproduced or utilized in any form or by any means, electronic or mechanical, including photocopying and microfilm, without permission in writing from either IEC or IEC's member National Committee in the country of the requester. If you have any questions about IEC copyright or have an enquiry about obtaining additional rights to this publication, please contact the address below or your local IEC member National Committee for further information.

IEC Central Office
3, rue de Varembé
CH-1211 Geneva 20
Switzerland

Tel.: +41 22 919 02 11
Fax: +41 22 919 03 00
info@iec.ch
www.iec.ch

About the IEC
The International Electrotechnical Commission (IEC) is the leading global organization that prepares and publishes International Standards for all electrical, electronic and related technologies.

About IEC publications
The technical content of IEC publications is kept under constant review by the IEC. Please make sure that you have the latest edition, a corrigenda or an amendment might have been published.

IEC Catalogue - webstore.iec.ch/catalogue
The stand-alone application for consulting the entire bibliographical information on IEC International Standards, Technical Specifications, Technical Reports and other documents. Available for PC, Mac OS, Android Tablets and iPad.

IEC publications search - www.iec.ch/searchpub
The advanced search enables to find IEC publications by a variety of criteria (reference number, text, technical committee,…). It also gives information on projects, replaced and withdrawn publications.

IEC Just Published - webstore.iec.ch/justpublished
Stay up to date on all new IEC publications. Just Published details all new publications released. Available online and also once a month by email.

Electropedia - www.electropedia.org
The world's leading online dictionary of electronic and electrical terms containing 20 000 terms and definitions in English and French, with equivalent terms in 16 additional languages. Also known as the International Electrotechnical Vocabulary (IEV) online.

IEC Glossary - std.iec.ch/glossary
65 000 electrotechnical terminology entries in English and French extracted from the Terms and Definitions clause of IEC publications issued since 2002. Some entries have been collected from earlier publications of IEC TC 37, 77, 86 and CISPR.

IEC Customer Service Centre - webstore.iec.ch/csc
If you wish to give us your feedback on this publication or need further assistance, please contact the Customer Service Centre: csc@iec.ch.

AVA Documents
Document Sharing Hub

Full document details: IEC TR 61243-6 2017

IEC TR 61243-6

Edition 1.0 2017-03

TECHNICAL REPORT

colour inside

Live working – Voltage detectors – Part 6: Guidelines on non-contact voltage detectors (NCVD) for use at nominal voltages above 1 kV AC

INTERNATIONAL ELECTROTECHNICAL COMMISSION

ICS 13.260; 29.240.20; 29.260.99

ISBN 978-2-8322-3903-2

Warning! Make sure that you obtained this publication from an authorized distributor.

® Registered trademark of the International Electrotechnical Commission

Documents
Document Sharing Hub

Full document details: IEC TR 61243-6 2017

CONTENTS

FOREWORD 4
INTRODUCTION 6
1 Scope 7
2 Normative references 7
3 Terms and definitions 7
4 The principles of an NCVD 11
4.1 NCVD designed to work at a distance without any contact 11
4.2 NCVD designed to work with reference points 13
4.2.1 General 13
4.2.2 NCVD designed to work with one reference point 14
4.2.3 NCVD designed to work with two reference points 15
5 Different designs of non-contact voltage detectors 17
6 Limitations and recommendations of use for each type of NCVD 19
6.1 Principal limitations 19
6.2 Recommendations for the selection, calibration and use of NCVD 19
6.2.1 Selection of the appropriate type of NCVD 19
6.2.2 Calibration of the selected device 20
6.2.3 Use of the selected device 20
7 Recommended requirements 21
7.1 General 21
7.2 Recommended general requirements 21
7.2.1 Safety 21
7.2.2 Indication 21
7.2.3 Electromagnetic compatibility (EMC) 21
7.3 Recommended functional requirements 22
7.3.1 Clear indication 22
7.3.2 Clear perceptibility 25
7.3.3 Temperature and humidity dependence of the indication 26
7.3.4 Frequency dependence 26
7.3.5 Response time 26
7.3.6 Power source dependability 26
7.3.7 Testing element 26
7.3.8 Non response to DC voltage (static electric field) 27
7.3.9 Immunity to electrostatic discharges 27
7.3.10 Time rating 27
7.4 Electrical requirements 27
7.4.1 Insulating material 27
7.4.2 Protection against bridging for Type 3 only 27
7.4.3 Resistance against sparking 28
7.4.4 Resistive (impedance) element of Type 5 only 28
7.5 Recommendations for mechanical performance 28
7.5.1 General 28
7.5.2 Design 28
7.5.3 Dimensions and construction 28

AVA Documents
Document Sharing Hub
Full document details: IEC TR 61243-6 2017

7.5.4 Degree of protection provided by enclosure 30
7.5.5 Grip force and deflection 30
7.5.6 Vibration drop and shock resistance 31
7.6 Markings 31
7.7 Instructions for use 31
Annex A (informative) General considerations about voltage detection 32
A.1 General 32
A.2 Principles of functioning of voltage detectors 32
A.2.1 Basic analysis 32
A.2.2 Voltage detection with two contact electrodes (bi-polar detectors) 32
A.2.3 Voltage detection with one contact electrode 33
A.2.4 Voltage detection without contact electrode 34
Annex B (informative) Instructions for use 36
Annex C (informative) In-service care 37
C.1 General 37
C.2 Maintenance 37
Annex D (informative) Suitable for live working; double triangle 38
Bibliography 39

Figure 1 – NCVD working at a distance without any contact 12
Figure 2 – Effect of the relative position of the non-contact voltage detector 13
Figure 3 – NCVD working at a distance with one reference point 14
Figure 4 – Non-contact voltage detector with a reference point making contact with the cable insulation covering an insulated conductor 15
Figure 5 – Non-contact voltage detector working with two reference points making contact with the cap and pin of an insulator 16
Figure 6 – Non-contact voltage detector working with two reference points on an underground cable 16
Figure 7 – Directional properties of NCVD working at distance 25
Figure 8 – Examples of designs of NCVDs 29
Figure A.1 – Bi-polar voltage detection principle 33
Figure A.2 – Capacitive unipolar voltage detection principle 34

Table 1 – Types of non-contact voltage detector 18
Table 2 – Limitations for use 19
Table 3 – Specific recommendations for use 20
Table 4 – Examples of values of the radius of the cone of detection as a function of the directional properties angle 24
Table 5 – Climatic categories 26
Table 6 – Minimum length of the insulating element or of the insulating stick (L_i) 30
Table C.1 – Recommended checking points for in-service care 37

Documents
Document Sharing Hub
Full document details: IEC TR 61243-6 2017

INTERNATIONAL ELECTROTECHNICAL COMMISSION

LIVE WORKING – VOLTAGE DETECTORS –

Part 6: Guidelines on non-contact voltage detectors (NCVD) for use at nominal voltages above 1 kV AC

FOREWORD

1) The International Electrotechnical Commission (IEC) is a worldwide organization for standardization comprising all national electrotechnical committees (IEC National Committees). The object of IEC is to promote international co-operation on all questions concerning standardization in the electrical and electronic fields. To this end and in addition to other activities, IEC publishes International Standards, Technical Specifications, Technical Reports, Publicly Available Specifications (PAS) and Guides (hereafter referred to as "IEC Publication(s)"). Their preparation is entrusted to technical committees; any IEC National Committee interested in the subject dealt with may participate in this preparatory work. International, governmental and non-governmental organizations liaising with the IEC also participate in this preparation. IEC collaborates closely with the International Organization for Standardization (ISO) in accordance with conditions determined by agreement between the two organizations.
2) The formal decisions or agreements of IEC on technical matters express, as nearly as possible, an international consensus of opinion on the relevant subjects since each technical committee has representation from all interested IEC National Committees.
3) IEC Publications have the form of recommendations for international use and are accepted by IEC National Committees in that sense. While all reasonable efforts are made to ensure that the technical content of IEC Publications is accurate, IEC cannot be held responsible for the way in which they are used or for any misinterpretation by any end user.
4) In order to promote international uniformity, IEC National Committees undertake to apply IEC Publications transparently to the maximum extent possible in their national and regional publications. Any divergence between any IEC Publication and the corresponding national or regional publication shall be clearly indicated in the latter.
5) IEC itself does not provide any attestation of conformity. Independent certification bodies provide conformity assessment services and, in some areas, access to IEC marks of conformity. IEC is not responsible for any services carried out by independent certification bodies.
6) All users should ensure that they have the latest edition of this publication.
7) No liability shall attach to IEC or its directors, employees, servants or agents including individual experts and members of its technical committees and IEC National Committees for any personal injury, property damage or other damage of any nature whatsoever, whether direct or indirect, or for costs (including legal fees) and expenses arising out of the publication, use of, or reliance upon, this IEC Publication or any other IEC Publications.
8) Attention is drawn to the Normative references cited in this publication. Use of the referenced publications is indispensable for the correct application of this publication.
9) Attention is drawn to the possibility that some of the elements of this IEC Publication may be the subject of patent rights. IEC shall not be held responsible for identifying any or all such patent rights.

The main task of IEC technical committees is to prepare International Standards. However, a technical committee may propose the publication of a Technical Report when it has collected data of a different kind from that which is normally published as an International Standard, for example "state of the art".

IEC TR 61243-6, which is a Technical Report, has been prepared by IEC technical committee 78: Live working.

The text of this Technical Report is based on the following documents:

Enquiry draft	Report on voting
78/1143/DTR	78/1162A/RVDTR

Full information on the voting for the approval of this Technical Report can be found in the report on voting indicated in the above table.

AVA Documents
Document Sharing Hub

This document has been drafted in accordance with the ISO/IEC Directives, Part 2.

Terms defined in Clause 3 are given in *italic* print throughout this standard.

A list of all parts of the IEC 61243 series, published under the general title *Live working – Voltage detectors*, can be found on the IEC website.

The committee has decided that the contents of this document will remain unchanged until the stability date indicated on the IEC website under "http://webstore.iec.ch" in the data related to the specific document. At this date, the document will be

- reconfirmed,
- withdrawn,
- replaced by a revised edition, or
- amended.

A bilingual version of this publication may be issued at a later date.

IMPORTANT – The 'colour inside' logo on the cover page of this publication indicates that it contains colours which are considered to be useful for the correct understanding of its contents. Users should therefore print this document using a colour printer.

Documents
Document Sharing Hub

Full document details: IEC TR 61243-6 2017

INTRODUCTION

With the aim of ensuring the safety of the users the purpose of a *voltage detector* is to give a *clear indication* of the presence or absence of the operating voltage, without any need for interpretation or analytical evaluation by the user.

IEC 61243-1, IEC 61243-2 and IEC 61243-3 apply to portable voltage detectors designed to work correctly when they are in direct contact with the bare part of the installation to be tested.

At HV and UHV, large distances between the user and the bare parts to be tested make the handling of a very long *insulating element* or *insulating stick* an ergonomic and safety concern. In such situations, it may become convenient to avoid any contact with the bare part to be tested and to perform voltage detection at a distance.

This document provides considerations and performance guidelines for portable “non-contact” *voltage detectors* and it can be used as a reference for the development of national, industry or manufacturer's standard(s) or for the selection of a product by users.

This document has been prepared taking into consideration the provisions given in IEC 61477.

Documents
Document Sharing Hub

Full document details: IEC TR 61243-6 2017

LIVE WORKING – VOLTAGE DETECTORS –

Part 6: Guidelines on non-contact voltage detectors (NCVD) for use at nominal voltages above 1 kV AC

1 Scope

This part of IEC 61243, which is a Technical Report, is applicable to portable *non-contact voltage detectors* (NCVD) with built-in power source, to be used to indicate the presence or the absence of the *operating voltage* on electrical systems for *nominal voltage*s above 1 kV AC and frequencies of 16 2/3 Hz, 50 Hz and/or 60 Hz.

NOTE 16,7 Hz is often referenced.

This document applies only to devices that are not designed to be used in contact with the bare part of the installation on which the presence or the absence of the *operating voltage* has to be tested.

This document describes only devices, and their behaviour, using electric field and voltage gradient detection principles even if other principles could be used. It provides performance guidelines, recommendations for use and recommended minimum criteria for selection.

Devices like personal safety distance *voltage detectors*, distance *voltage detectors* for emergency responders or machine operators are not covered by this document.

Except when otherwise specified, all the voltages defined in this document refer to phase-to-phase voltages of three-phase systems. In other systems, the applicable phase-to-phase or phase-to-earth (ground) voltages are used to determine the operating voltage.

2 Normative references

The following documents are referred to in the text in such a way that some or all of their content constitutes requirements of this document. For dated references, only the edition cited applies. For undated references, the latest edition of the referenced document (including any amendments) applies.

IEC 61318, *Live working – Conformity assessment applicable to tools, devices and equipment*

3 Terms and definitions

For the purposes of this document, the terms and definitions given in IEC 61318 and the following apply.

ISO and IEC maintain terminological databases for use in standardization at the following addresses:

- IEC Electropedia: available at http://www.electropedia.org/
- ISO Online browsing platform: available at http://www.iso.org/obp

3.1
adaptor
part of an NCVD as a separate device which permits attachment of an *insulating stick*

AVA Documents
Document Sharing Hub

Full document details: IEC TR 61243-6 2017

3.2
application mark
mark on the NCVD to show to the user where to put the NCVD at the application point for *clear indication*

Note 1 to entry: An *application mark* may or may not be present.

3.3
application point
specific point of the installation where the *application mark* (if present) of the NCVD should correspond

Note 1 to entry: An *application point* may or may not be needed.

3.4
active signal
audible or visual phenomenon whose presence, absence or variation is considered as representing information on the condition “voltage present” or “voltage not present”

Note 1 to entry: A signal indicating only that the NCVD is ready to operate is not considered as an *active signal*.

3.5
clear indication
unambiguous detection and indication of the voltage state of the part to be tested

3.6
clear perceptibility
case where the indication is unmistakably discernible by the user under specific environmental conditions when the NCVD is in its operating position

3.7
contact electrode
bare conductive part of a *voltage detector* which establishes the electric connection to the component to be tested

3.8
design of NCVD
different constructions of NCVDs, either as a complete device with or without an *insulating element* or as a separate device intended to be equipped with an *insulating stick*

3.9
directional property
property whereby an NCVD detects an electrical field relative to a specific position

3.10
electrode
metallic part of an NCVD combined with one or more other metallic parts that allows to pick up the electric field

3.11
expected voltage
maximum voltage value of the part of the installation that will or could be touched by the NCVD

3.12
far electric field
far field
in free space, region where the distribution of the electrical field is almost independent of the distance to the source

Documents
Document Sharing Hub
Full document details: IEC TR 61243-6 2017

3.13
hand guard
distinctive physical guard separating the handle of an NCVD as a complete device from the *insulating element*

Note 1 to entry: The purpose of the *hand guard* is to prevent the hands from slipping and passing into contact with the *insulating element*.

3.14
indicator
part of the NCVD that indicates the presence or absence of the *operating voltage* for the part of the electrical equipment or installation to be tested

3.15
indoor type
NCVD designed for use in dry conditions, normally indoors

3.16
insertion depth
distance between the *limit mark* and the top of the NCVD as a complete device

3.17
insulating element
part of an NCVD as a complete device that provides adequate safety distance and insulation to the user

3.18
insulating stick
insulating tool made essentially of an insulating tube and/or rod with end fittings

Note 1 to entry: For voltage detection, an *insulating stick* is intended to be attached to the NCVD as a separate device in order to provide the length to reach the installation to be tested and adequate safety distance and insulation to the user.

[SOURCE: IEC 60050-651:2014, 651-22-01, modified – Note 1 to entry has been added.]

3.19
interference field
<created by the network> electric field due to the configuration of the installation that may affect the electric field of the part to be tested

3.20
interference voltage
<created by the network> voltage picked up inductively or capacitively by the part to be tested

3.21
limit mark
distinctive visible location or mark on the NCVD to indicate to the user the physical limit to which the NCVD could be inserted between live parts

Note 1 to entry: A *limit mark* may or may not be present.

3.22
medium electric field
medium field
in free space, region where the distribution of the electric field is slightly dependent on the distance to the source

Documents
Document Sharing Hub
Full document details: IEC TR 61243-6 2017

3.23
near electric field
near field
in free space, region where the distribution of the electrical field is strongly dependent on the distance to the source

3.24
nominal distance
D_n
suitable value of distance, between the bare part of the installation to be tested and the NCVD, associated with the *nominal voltage* of the NCVD for *clear indication*

Note 1 to entry: The *nominal distance* of the NCVD is a parameter associated with its *clear indication*. The manufacturer can identify the *nominal distance* directly linked to the corresponding discrete *nominal voltage*.

Note 2 to entry: An NCVD may have more than one *nominal distance* when having more than one *nominal voltage*, or one or more than one *nominal voltage* range. In this case, for each *nominal voltage* or each *nominal voltage* range the manufacturer can identify at least one characteristic discrete *nominal voltage*. The manufacturer can then identify the *nominal distance* directly linked to each corresponding discrete *nominal voltage*.

Note 3 to entry: For some devices, the *nominal distance*(s) could be defined by the NCVD *reference point*s.

3.25
nominal voltage
U_n
suitable approximate value of voltage used to identify a system or device

Note 1 to entry: The *nominal voltage* of the NCVD is a parameter associated with its *clear indication*. An NCVD may have more than one *nominal voltage*, or a *nominal voltage* range. Limit values of the *nominal voltage* range are named $U_{n\ min}$ and $U_{n\ max}$

[SOURCE: IEC 60050-601:1985, 601-01-21, modified – The definition has been modified to fit the specific context of device or equipment and Note 1 to entry has been added.]

3.26
non-contact voltage detector
NCVD
voltage detector that does not require making physical contact with the bare part of the installation (e.g. conductor, bus bar, capacitive tap for a cable elbow or switchgear) on which the presence or the absence of the *operating voltage* has to be tested

3.27
operating distance range
range of distances to the bare part to be tested declared by the manufacturer where the NCVD will function properly when used according to the instructions for use

Note 1 to entry: For some devices, the operating distance could be defined by the NCVD *reference point*s.

3.28
outdoor type
NCVD designed for use in wet conditions, either indoors or outdoors

3.29
operating voltage
<in a system> system voltage under normal conditions at a given instant and location

Note 1 to entry: This value may be calculated or measured.

3.30
protection against bridging
protection against flashover or breakdown, when the insulation between the parts of the installation to be tested, at different potentials, is reduced by the presence of the NCVD

AVA Documents
Document Sharing Hub
Full document details: IEC TR 61243-6 2017

3.31
rated voltage
U_r
value of voltage to which certain operating specifications are referred

Note 1 to entry: The *rated voltage* of the NCVD is the voltage selected from IEC 60071-1:2006+AMD1:2010, Table 2 and Table 3, column 1, which should either be equal to the *nominal voltage* (or the highest *nominal voltage* of its *nominal voltage* range), or the next higher voltage selected from those tables.

3.32
reference point
point of an installation which is different from the bare part to be tested and which needs to be touched in order to give an electrical reference according to the principle of functioning of some NCVD

3.33
response time
time delay between sudden change of the voltage state on the part to be tested and the associated *clear indication*

3.34
testing element
built-in element or separate device by means of which the functioning of the NCVD can be checked by the user

[SOURCE: IEC 60743:2013, 11.3.7, modified – The definition has been modified to apply specifically to NCVD.]

3.35
threshold voltage
U_t
minimum voltage between the live part and earth (ground) required to give a *clear indication* corresponding to specific conditions as defined in the corresponding test

Note 1 to entry: As defined in this part of IEC 61243, *threshold voltage* is related to specific test conditions. Users should be aware that their requirements for *threshold voltage* for field operation need to be related to the test conditions.

3.36
voltage detector
diagnostic device used to provide clear evidence of the presence or absence of an operating voltage

Note 1 to entry: These diagnostic devices are generally described as either capacitive type or resistive type.

Note 2 to entry: Clear evidence is a YES or NO indication with no interpretation needed. Sometimes, *voltage detectors* also have supplementary function(s) such as the display of voltage values.

[SOURCE: IEC 60050-651:2014, 651-24-02]

4 The principles of an NCVD

4.1 NCVD designed to work at a distance without any contact

A *non-contact voltage detector* working at a distance operates by detecting the AC electric field generated in free air by the energized part of the installation to be tested. This detection is typically carried out via the use of a minimum of two internal metallic *electrode*s positioned at some distance apart. It is possible to represent the electric configuration as being equivalent to two stray capacitances. One is measured between the part to be tested and the first (internal) *electrode* of the *voltage detector*. The other is measured between the second (internal) *electrode* and the surrounding space (including earth) as shown in Figure 1. It

AVA Documents
Document Sharing Hub

should be noted that the closer an NCVD approaches the part to be tested, the more similar it becomes to a unipolar capacitive type (see Annex A).

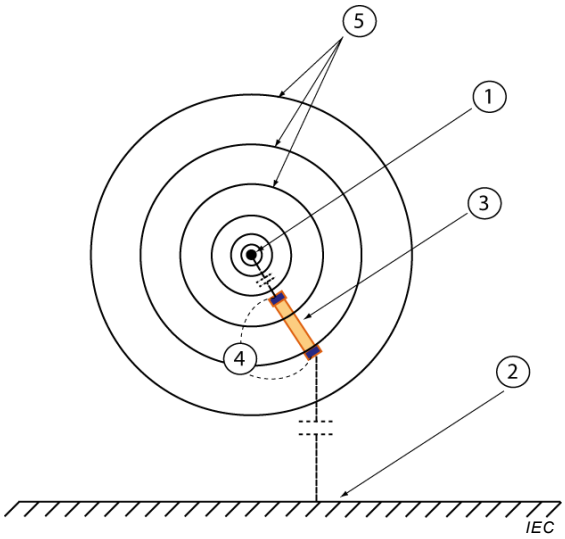

Key

1 part to be tested

2 earth

3 *non-contact voltage detector* with its two internal *electrodes*

4 potential difference between the two *electrodes* of the *voltage detector*

5 electric field equipotential lines

Figure 1 – NCVD working at a distance without any contact

For this design of detector, the voltage detection is mainly based on the evaluation of an electric field associated with a potential difference between the two floating *electrodes*. As the electric potential at the floating *electrodes* is a function of the electric field distribution, the distribution of the electric field will consequently affect the detection. In most of the installation configurations, the electric field around a line or piece of equipment is not uniform. The electrical field strength and the gradient of field are normally higher near the live part and the strength and the gradient of field decreases as the distance from the live part increases. The relative positioning of the NCVD with respect to the part to be tested is then a parameter that may affect the correct indication of this type of NCVD. As illustrated in Figure 2, the voltage difference developed between its two floating electrodes will depend on the gradient of the electric field at and near the location of the NCVD. When the *voltage detector* is close to the part to be tested (Position P1 of Figure 2a), the electric field changes rapidly with the distance and a voltage difference will be easily detectable between the two floating *electrodes*. Alternatively, if the *voltage detector* is too far from the part to be tested (Position P2 of Figure 2a), the electric field will change only slightly with distance and the voltage difference across the two *electrodes* could be too small for a correct detection.

If the position of the *voltage detector* is such that the electric field is practically independent of location (i.e. nearly constant) at the position of the *voltage detector* (Position P3 of Figure 2b), no significant voltage difference will be developed between the two floating *electrodes*. This may result in an incorrect indication of the *voltage detector* (e.g. absence of voltage instead of voltage present).

The shape of the part to be tested and the distance between this part and adjacent parts at different potential will also affect the electric field distribution which consequently may affect the indication of the device. The strength of the electric field at the surface of an energized part will decrease with the height of that part above earth, and will also decrease as the size of the part increases. Also, adjacent parts at the same potential as the energized part will

AVA Documents
Document Sharing Hub
Full document details: IEC TR 61243-6 2017