IEC TR 61547-1

Edition 2.0 2017-10

TECHNICAL REPORT

colour inside

Withdrawn

Equipment for general lighting purposes – EMC immunity requirements– Part 1: An objective light flickermeter and voltage fluctuation immunity test method

IEC TR 61547-1:2017-10(en)

Documents
Document Sharing Hub

Full document details: IEC TR 61547-1 2017

THIS PUBLICATION IS COPYRIGHT PROTECTED

Copyright © 2017 IEC, Geneva, Switzerland

All rights reserved. Unless otherwise specified, no part of this publication may be reproduced or utilized in any form or by any means, electronic or mechanical, including photocopying and microfilm, without permission in writing from either IEC or IEC's member National Committee in the country of the requester. If you have any questions about IEC copyright or have an enquiry about obtaining additional rights to this publication, please contact the address below or your local IEC member National Committee for further information.

IEC Central Office
3, rue de Varembé
CH-1211 Geneva 20
Switzerland

Tel.: +41 22 919 02 11
Fax: +41 22 919 03 00
info@iec.ch
www.iec.ch

About the IEC
The International Electrotechnical Commission (IEC) is the leading global organization that prepares and publishes International Standards for all electrical, electronic and related technologies.

About IEC publications
The technical content of IEC publications is kept under constant review by the IEC. Please make sure that you have the latest edition, a corrigenda or an amendment might have been published.

IEC Catalogue - webstore.iec.ch/catalogue
The stand-alone application for consulting the entire bibliographical information on IEC International Standards, Technical Specifications, Technical Reports and other documents. Available for PC, Mac OS, Android Tablets and iPad.

IEC publications search - www.iec.ch/searchpub
The advanced search enables to find IEC publications by a variety of criteria (reference number, text, technical committee,…). It also gives information on projects, replaced and withdrawn publications.

IEC Just Published - webstore.iec.ch/justpublished
Stay up to date on all new IEC publications. Just Published details all new publications released. Available online and also once a month by email.

Electropedia - www.electropedia.org
The world's leading online dictionary of electronic and electrical terms containing 20 000 terms and definitions in English and French, with equivalent terms in 16 additional languages. Also known as the International Electrotechnical Vocabulary (IEV) online.

IEC Glossary - std.iec.ch/glossary
65 000 electrotechnical terminology entries in English and French extracted from the Terms and Definitions clause of IEC publications issued since 2002. Some entries have been collected from earlier publications of IEC TC 37, 77, 86 and CISPR.

IEC Customer Service Centre - webstore.iec.ch/csc
If you wish to give us your feedback on this publication or need further assistance, please contact the Customer Service Centre: csc@iec.ch.

Withdrawn

Documents
Document Sharing Hub

Full document details: IEC TR 61547-1 2017

IEC TR 61547-1

Edition 2.0 2017-10

TECHNICAL REPORT

colour inside

withdrawn

Equipment for general lighting purposes – EMC immunity requirements– Part 1: An objective light flickermeter and voltage fluctuation immunity test method

INTERNATIONAL
ELECTROTECHNICAL
COMMISSION

ICS 29.140.20

ISBN 978-2-8322-4904-8

Warning! Make sure that you obtained this publication from an authorized distributor.

® Registered trademark of the International Electrotechnical Commission

Documents
Document Sharing Hub

Full document details: IEC TR 61547-1 2017

CONTENTS

FOREWORD 4
INTRODUCTION 6
1 Scope 7
2 Normative references 7
3 Terms, definitions, abbreviated terms and symbols 8
3.1 Terms and definitions 8
3.2 Abbreviated terms 9
3.3 Symbols 9
4 General 10
5 Light flickermeter 11
6 Voltage fluctuation disturbance signal 11
6.1 General 11
6.2 Mains signal parameters 13
6.3 Disturbance signal parameters and test levels 13
7 Test setup and equipment 15
7.1 General 15
7.2 Test voltage 15
7.3 Optical test environment 16
7.4 Light sensor and amplifier 16
7.5 Signals to be measured 16
7.6 Signal processing 17
7.6.1 Anti-aliasing filter 17
7.6.2 Sampling frequency 17
7.6.3 Signal resolution 18
8 Verification procedure 19
8.1 General 19
8.2 Light flickermeter 19
8.3 Mains voltage parameters without modulation 20
8.3.1 Nominal voltage level 20
8.3.2 Mains frequency 20
8.4 Voltage fluctuation level 20
8.4.1 General 20
8.4.2 Option 1: measure the actual modulation frequencies and voltage levels 20
8.4.3 Option 2: measure P_{st}^{V}-values using a flickermeter 20
8.5 Light sensor and amplifier 21
8.6 Test environment 21
8.7 Light flicker noise 21
9 Test procedure 21
10 Conditions during testing 22
11 Evaluation of the test result 22
12 Test report 23
Annex A (informative) Specification of the light flickermeter 24
A.1 Voltage flickermeter 24
A.2 Specification of the light flickermeter 25
A.2.1 General 25

Withdrawn

AVA Documents
Document Sharing Hub

Full document details: IEC TR 61547-1 2017

A.2.2 Block a: illuminance adapter 25
A.2.3 Block b: weighting filters 25
A.2.4 Block c: squaring multiplier, sliding mean filter and scaling 26
A.2.5 Block d: statistical analysis 26
A.3 Verification of the light flickermeter 27
A.4 Example of P_{st}^{LM} implementation in MATLAB® 27
Annex B (informative) Uncertainty considerations 28
B.1 General 28
B.2 General symbols 28
B.3 Measurand 28
B.4 Influence quantities 28
B.5 Uncertainty budget 30
Annex C (informative) Examples of test results of lighting equipment 32
C.1 Test without voltage fluctuations 32
C.2 Test with (intentional) voltage fluctuations 32
C.3 Test under dimming conditions 36
Bibliography 38

Figure 1 – Full EMC approach for mains voltage fluctuations 11
Figure 2 – Definition of the mains test signal including a rectangular modulated voltage fluctuation (see Equation (1)) 13
Figure 3 – Block diagram voltage-fluctuation immunity test 15
Figure 4 – Example of a recorded mains voltage fluctuation and illuminance signal of a 60 W incandescent lamp 19
Figure A.1 – Structure of the IEC 61000-4-15 flickermeter which uses voltage as input 24
Figure A.2 – Structure of the light flickermeter 24
Figure C.1 – Graphical P_{st}^{LM} results for three EUTs with rectangular modulation at five frequencies ($P_{st}^{V} = 1$) 33
Figure C.2 – EUT1: recorded signals (no mains voltage modulation) 34
Figure C.3 – EUT1: recorded signals (with modulation) 35
Figure C.4 – EUT2: relative illuminance: mains voltage modulation d = 0,407 % at 13,5 Hz ($P_{st}^{V} = 1$) 36
Figure C.5 – EUT3: relative illuminance: mains voltage modulation d = 0,407 % at 13,5 Hz ($P_{st}^{V} = 1$) 36
Figure C.6 – Graphical P_{st}^{LM} results for four EUTs under dimming conditions 37

Table 1 – Voltage fluctuations – Test specification of voltage fluctuations applied at input AC power ports 120/230 V; 50/60 Hz 14
Table A.1 – Test specification of illuminance fluctuations for lightmeter classifier 27
Table B.1 – Influence quantities and their recommended tolerances 29
Table B.2 – Uncertainty budget of the voltage fluctuation immunity test 31
Table C.1 – Numerical results P_{st}^{LM} calculations for three EUTs without voltage modulation 32
Table C.2 – Numerical results P_{st}^{LM} calculations for three EUTs with voltage modulation 32
Table C.3 – Numerical results P_{st} calculations for four EUTs under dimming conditions 37

Withdrawn
AVA Documents
Document Sharing Hub
Full document details: IEC TR 61547-1 2017

INTERNATIONAL ELECTROTECHNICAL COMMISSION

EQUIPMENT FOR GENERAL LIGHTING PURPOSES – EMC IMMUNITY REQUIREMENTS–

Part 1: An objective light flickermeter and voltage fluctuation immunity test method

FOREWORD

Withdrawn

1) The International Electrotechnical Commission (IEC) is a worldwide organization for standardization comprising all national electrotechnical committees (IEC National Committees). The object of IEC is to promote international co-operation on all questions concerning standardization in the electrical and electronic fields. To this end and in addition to other activities, IEC publishes International Standards, Technical Specifications, Technical Reports, Publicly Available Specifications (PAS) and Guides (hereafter referred to as "IEC Publication(s)"). Their preparation is entrusted to technical committees; any IEC National Committee interested in the subject dealt with may participate in this preparatory work. International, governmental and non-governmental organizations liaising with the IEC also participate in this preparation. IEC collaborates closely with the International Organization for Standardization (ISO) in accordance with conditions determined by agreement between the two organizations.
2) The formal decisions or agreements of IEC on technical matters express, as nearly as possible, an international consensus of opinion on the relevant subjects since each technical committee has representation from all interested IEC National Committees.
3) IEC Publications have the form of recommendations for international use and are accepted by IEC National Committees in that sense. While all reasonable efforts are made to ensure that the technical content of IEC Publications is accurate, IEC cannot be held responsible for the way in which they are used or for any misinterpretation by any end user.
4) In order to promote international uniformity, IEC National Committees undertake to apply IEC Publications transparently to the maximum extent possible in their national and regional publications. Any divergence between any IEC Publication and the corresponding national or regional publication shall be clearly indicated in the latter.
5) IEC itself does not provide any attestation of conformity. Independent certification bodies provide conformity assessment services and, in some areas, access to IEC marks of conformity. IEC is not responsible for any services carried out by independent certification bodies.
6) All users should ensure that they have the latest edition of this publication.
7) No liability shall attach to IEC or its directors, employees, servants or agents including individual experts and members of its technical committees and IEC National Committees for any personal injury, property damage or other damage of any nature whatsoever, whether direct or indirect, or for costs (including legal fees) and expenses arising out of the publication, use of, or reliance upon, this IEC Publication or any other IEC Publications.
8) Attention is drawn to the Normative references cited in this publication. Use of the referenced publications is indispensable for the correct application of this publication.
9) Attention is drawn to the possibility that some of the elements of this IEC Publication may be the subject of patent rights. IEC shall not be held responsible for identifying any or all such patent rights.

The main task of IEC technical committees is to prepare International Standards. However, a technical committee may propose the publication of a Technical Report when it has collected data of a different kind from that which is normally published as an International Standard, for example "state of the art".

IEC TR 61547-1, which is a Technical Report, has been prepared by technical committee 34: Lamps and related equipment.

This second edition cancels and replaces the first edition published in 2015. This edition constitutes a technical revision.

AVA Documents
Document Sharing Hub

Full document details: IEC TR 61547-1 2017

This edition includes the following significant technical changes with respect to the previous edition:

a) the title of Part 1 has been changed to reflect the more general application of the objective flickermeter;

b) the specific voltage fluctuation immunity test method has been extended for lighting equipment rated for 120 V AC and 230 V AC, 50 Hz and 60 Hz.

The text of this Technical Report is based on the following documents:

Draft TR	Report on voting
34/387/DTR	34/398A/RVDTR

Full information on the voting for the approval of this Technical Report can be found in the report on voting indicated in the above table.

This document has been drafted in accordance with the ISO/IEC Directives, Part 2.

A list of all parts in the IEC 61547 series, published under the general title *Equipment for general lighting purposes – EMC immunity requirements*, can be found on the IEC website.

The committee has decided that the contents of this document will remain unchanged until the stability date indicated on the IEC website under "http://webstore.iec.ch" in the data related to the specific document. At this date, the document will be

- reconfirmed,
- withdrawn,
- replaced by a revised edition, or
- amended.

A bilingual version of this publication may be issued at a later date.

IMPORTANT – The 'colour inside' logo on the cover page of this publication indicates that it contains colours which are considered to be useful for the correct understanding of its contents. Users should therefore print this document using a colour printer.

Withdrawn

Documents
Document Sharing Hub

Full document details: IEC TR 61547-1 2017

INTRODUCTION

The fast rate at which solid state light (SSL) sources can change their intensity is one of the main drivers behind the revolution in the lighting world and applications of lighting. Linked to the fast rate of the intensity change is a direct transfer of the modulation of the driving current, both intended and unintended, to a modulation of the luminous output. This light modulation can give rise to changes in the perception of the environment. While in some very specific entertainment, scientific or industrial applications, a change of perception due to light modulation is desired, for most everyday applications and activities the change is detrimental and undesired. The general term used for these changes in the perception of the environment is “temporal light artefacts” (TLAs) and these can have a large influence on the judgment of the light quality. Moreover, the visible modulation of light can lead to a decrease in performance, increased fatigue as well as acute health problems like epileptic seizures and migraine episodes [18][19][1].

Different terms exist to describe the different types of TLAs that may be perceived by humans. The term ‘flicker’ refers to light variation that may be directly perceived by an observer. ‘Stroboscopic effect’ is an effect which may become visible for an observer when a moving or rotating object is illuminated (CIE TN 006:2016[22]).

Possible causes for light modulation of lighting equipment that may give rise to flicker or stroboscopic effect are:

– AC supply combined with light source technology and its driver topology;
– dimming technology of externally applied dimmers or internal light level regulators;
– mains voltage fluctuations caused by electrical apparatus connected to the mains (conducted electromagnetic disturbances) or intentionally applied for mains-signalling purposes.

Lighting products that show unacceptable flicker or stroboscopic effect are considered as poor quality lighting.

This document provides an objective light flickermeter and a method for testing the immunity of lighting equipment against mains voltage fluctuations caused by electrical apparatus connected to the mains at levels that are allowed through IEC 61000-3-3.

Flicker perception, as well as IEC 61000-3-3 and IEC 61000-4-15, the associated standards for voltage fluctuations and flickermeter, are based on the 60 W incandescent lamp. As a result of the phasing out of incandescent lamps and the widespread introduction of alternative lighting equipment technologies, a new reference lamp was considered. It has been demonstrated that new lighting technologies are in general less but sometimes also more sensitive to supply voltage fluctuations than the current 60 W incandescent lamp. A CIGRE working group has assessed the impact of new lighting technologies on the existing flicker standards [17]. For the moment, the present flicker sensitivity curve of IEC 61000-3-3 remains as the reference. However, because of the increased diversity of sensitivity of lighting equipment to voltage fluctuations, there is a future need for a voltage-fluctuation immunity test specifically for lighting equipment. In this way, the full EMC approach (Figure 1) is introduced for flicker, i.e. with a view to limiting voltage fluctuations caused by equipment connected to the grid, and in addition to establishing a minimum level of flicker immunity of lighting equipment against these voltage fluctuations.

This document will allow the lighting industry to gain experience in flicker immunity test methods. Results of actual tests will be reported in a separate IEC Technical Report. Based on the experience gained on this immunity test method, the adoption of a similar test to be applied for IEC 61547, the immunity standard for lighting equipment, will be considered.

[1] Numbers in square brackets refer to the Bibliography.

Withdrawn

Documents
Document Sharing Hub

Full document details: IEC TR 61547-1 2017

EQUIPMENT FOR GENERAL LIGHTING PURPOSES – EMC IMMUNITY REQUIREMENTS –

Part 1: An objective light flickermeter and voltage fluctuation immunity test method

Withdrawn

1 Scope

This part of IEC 61547 describes an objective light flickermeter, which can be applied for, amongst others, the following purposes:

– testing the intrinsic performance of all lighting equipment without voltage fluctuations;

– testing the immunity performance of lighting equipment against (unintentional) voltage fluctuation disturbance on the AC power port;

– testing the immunity performance of lighting equipment against intentional voltage fluctuation on the AC power port arising for example from ripple control systems.

The object of this document is to establish a common and objective reference for evaluating the performance of lighting equipment in terms of illuminance flicker. Temporal changes in the colour of light (chromatic flicker) are not considered in this test.

This method can be applied to lighting equipment which is within the scope of IEC technical committee 34, such as lamps and luminaires, intended for connection to a low voltage electricity supply. Independent auxiliaries such as drivers can also be tested by application of a representative light source to that auxiliary.

The objective light flickermeter and voltage fluctuation immunity method described in this document are based on the IEC 61000-3-3 standard for voltage fluctuation limits and the flickermeter standard IEC 61000-4-15.

The objective light flickermeter described in this document can be applied to objectively assess flicker of lighting equipment that is powered from any type of source, AC mains, DC mains, battery fed or fed through an external dimmer. The specific voltage fluctuation immunity test method described in this document applies to lighting equipment rated for 120 V AC and 230 V AC, 50 Hz and 60 Hz.

NOTE The principle of the method can be applied for other nominal voltage and frequency ratings.

2 Normative references

The following documents are referred to in the text in such a way that some or all of their content constitutes requirements of this document. For dated references, only the edition cited applies. For undated references, the latest edition of the referenced document (including any amendments) applies.

IEC 61000-3-3:2013, *Electromagnetic compatibility (EMC) – Part 3-3: Limits – Limitation of voltage changes, voltage fluctuations and flicker in public low-voltage supply systems, for equipment with rated current ≤ 16 A per phase and not subject to conditional connection*

IEC 61000-4-15:2010, *Electromagnetic compatibility (EMC) – Part 4-15: Testing and measurement techniques – Flickermeter – Functional and design specifications*

Documents
Document Sharing Hub

Full document details: IEC TR 61547-1 2017

3 Terms, definitions, abbreviated terms and symbols

3.1 Terms and definitions

For the purposes of this document, the terms and definitions given in IEC 61000-3-3 and IEC 61000-4-15 and the following apply.

ISO and IEC maintain terminological databases for use in standardization at the following addresses:

- IEC Electropedia: available at http://www.electropedia.org/
- ISO Online browsing platform: available at http://www.iso.org/obp

3.1.1
flicker
impression of unsteadiness of visual sensation induced by a light stimulus whose luminance or spectral distribution fluctuates with time

[SOURCE: IEC 60050-845:1987, 845-02-49]

3.1.2
flickermeter
instrument designed to measure any quantity representative of flicker

[SOURCE: IEC 60050-614:2016, 614-01-30]

3.1.3
voltage flickermeter
instrument as specified in IEC 61000-4-15 which is designed to measure any quantity representative of flicker resulting from mains voltage fluctuations

3.1.4
illuminance
quotient of the luminous flux $\mathrm{d}\Phi_\mathrm{v}$ incident on an element of the surface containing the point, by the area $\mathrm{d}A$ of that element

Equivalent definition. Integral, taken over the hemisphere visible from the given point, of the expression $L_\mathrm{v} \cdot \cos\theta \cdot \mathrm{d}\Omega$ where L_v is the luminance at the given point in the various directions of the incident elementary beams of solid angle $\mathrm{d}\Omega$, and θ is the angle between any of these beams and the normal to the surface at the given point

$$E_\mathrm{v} = \frac{\mathrm{d}\Phi_v}{\mathrm{d}A} = \int_{2\pi\,\mathrm{sr}} L_\mathrm{v} \cdot \cos\theta \cdot \mathrm{d}\Omega$$

Note 1 to entry: Illuminance is expressed in lx or $\mathrm{lm \cdot m^{-2}}$

[SOURCE: IEC 60050-845:1987, 845-01-38]

3.1.5
light flickermeter
instrument designed to measure flicker resulting from temporal changes in the intensity of the light in an objective way and based on the IEC 61000-4-15 specifications

3.1.6
threshold of flicker irritability
maximum value of a fluctuation of luminance or of spectral distribution which gives rise to a flicker tolerated without discomfort by a specified sample of the population

Withdrawn

Documents
Document Sharing Hub

Full document details: IEC TR 61547-1 2017

[SOURCE: IEC 60050-161:1990, 161-08-16]

3.1.7
short-term flicker indicator
P_{st}
measure of flicker evaluated over a specified time interval of a relatively short duration

Note 1 to entry: The duration is typically 10 min, in accordance with IEC 61000-4-15.

Note 2 to entry: The alternative term "short term flicker severity" is used in IEC 61000-3-3 and IEC 61000-4-15.

[SOURCE: IEC 60050-161:1990, 161-08-18, modified — Note 2 has been added.]

3.2 Abbreviated terms

AC	alternating current
AM	amplitude modulation
CFL	compact fluorescent lamp
CIE	Commission Internationale de l'Éclairage
cpm	changes per minute
DC	direct current
EUT	equipment under test
EMC	electromagnetic compatibility
EMI	electromagnetic interference
Hz	hertz
IEEE	Institute of Electrical and Electronics Engineers
kHz	kilohertz
LED	light emitting diode
LP	low pass
ms	millisecond
rect	rectangular
RMS	root mean square
SSL	solid state lighting
TLAs	temporal light artefacts
V	voltage
W	watt

3.3 Symbols

α	multiplication factor
C_A	gain of the light amplifier
d	relative voltage change
d_E	relative change of the rectangular modulation of the illuminance
d_r	relative change of the 100 Hz-illuminance ripple
Δu	instantaneous total voltage variation after a voltage fluctuation
ΔU	total voltage variation of the half-period RMS value after a voltage fluctuation
f	mains frequency (50 Hz)
f_m	modulation frequency
m	modulation index

Withdrawn

AVA Documents Document Sharing Hub

%	percent
pp	percentage point
P_{inst}	instantaneous flicker sensation
P_{st}	short-term flicker indicator
P_{st}^{E}	P_{st}-value of the standardized illuminance waveform $E(t)$
$P_{\text{st}}^{\text{EUT}}$	P_{st}-value of the illuminance of an EUT measured with a light flickermeter
$P_{\text{st}}^{\text{LM}}$	flicker metric of the illuminance measured with a light flickermeter
P_{st}^{V}	flicker metric of the supply voltage measured with a voltage flickermeter
$P_{\text{st}}^{\text{LM}}\big\|_{\text{noise}}$	light flicker noise level
$P_{\text{st}}^{\text{V}}\big\|_{\text{noise}}$	mains flicker noise level
s	complex Laplace variable
$\hat{u}$	amplitude of the mains voltage
$u(t)$	mains voltage signal
$u_{\text{E}}(t)$	output voltage of the light sensor amplifier
T_{m}	modulation period
T_{test}	period of time over which the illuminance is measured during application of the voltage fluctuation
U	half-period RMS value

4 General

The immunity of lighting equipment to voltage fluctuations may be tested by applying specific types and levels of voltage fluctuations to the mains, in accordance with the short-term flicker indicator P_{st} = 1 curve for the reference incandescent lamp of 60 W specified in IEC 61000-3-3. In this way, the full EMC approach is applied for flicker, i.e. voltage fluctuations caused by equipment connected to the grid are limited by the voltage fluctuation emission test of IEC 61000-3-3, while the level of flicker immunity of lighting equipment against these P_{st} = 1 voltage fluctuations is tested using the method specified in this document (see Figure 1).

During the test, the supply voltage is modulated with P_{st} = 1 fluctuation (denoted as P_{st}^{V}) extracted from the threshold of the flicker irritability curve and the luminous intensity variation of the lighting equipment is measured and recorded. A light flickermeter is applied to measure the value of the metric P_{st} (denoted as $P_{\text{st}}^{\text{LM}}$).

Withdrawn

Documents
Document Sharing Hub

Full document details: IEC TR 61547-1 2017

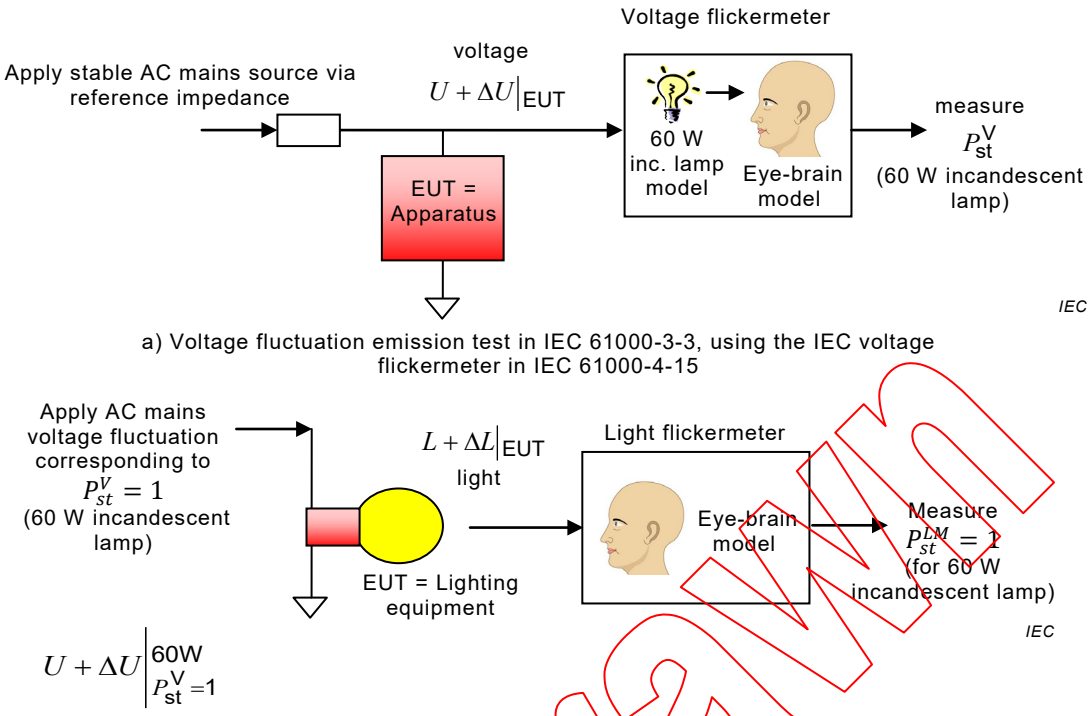

a) Voltage fluctuation emission test in IEC 61000-3-3, using the IEC voltage flickermeter in IEC 61000-4-15

b) Voltage fluctuation immunity test specified in this document

Figure 1 – Full EMC approach for mains voltage fluctuations

Withdrawn

5 Light flickermeter

For objective assessment of flicker due to low-frequency light modulation, the flickermeter specified in Annex A is used. Additional requirements for the light flickermeter are given in 7.3, 7.4, 7.5 and 7.6.

This light flickermeter can be applied to objectively assess the flicker of lighting equipment that is powered from any type of source, AC mains, DC mains, battery powered or powered through an external dimmer. In this document, specific mains voltage disturbance signals are given in Clause 6 for 120 V AC and 230 V AC, 50 Hz and 60 Hz networks.

6 Voltage fluctuation disturbance signal

6.1 General

The immunity test against voltage fluctuations is carried out in accordance with the test method specified in Clause 7. The disturbances are rectangular amplitude modulations that are to be applied on the AC power port.

The mains signal is to be amplitude modulated with rectangular signals with frequencies between approximately 0,05 Hz and 40 Hz. For the rectangular modulated mains signal $u(t)$, the following Equation (1) applies:

Documents
Document Sharing Hub
Full document details: IEC TR 61547-1 2017

$$u(t) = \hat{u} \cdot \sin(2\pi ft) \cdot \{1 + m \cdot \text{signum}\,(\sin(2\pi f_m t))\} \quad (1)$$

where

$\hat{u}$ is the amplitude of the mains voltage;

f is the mains frequency (50 Hz);

m is the modulation index;

signum(x) = the signum function, signum(x) = 1 for $x > 0$

signum(x) = 0 for $x = 0$

signum(x) = –1 for $x < 0$

f_m is the modulation frequency = $1/T_m$.

Furthermore the half-period RMS value U of the unmodulated mains signal can be written as:

$$U = \hat{u} / \sqrt{2} \quad (2)$$

In IEC 61000-4-15, the parameter d is applied, which is the total relative voltage change:

$$d = \Delta u / \hat{u} = \Delta U / U, \quad (3)$$

for rectangular AM modulation with modulation frequencies $< f$

where

Δu is the instantaneous total voltage variation after a voltage fluctuation;

ΔU is the total voltage variation of the half-period RMS value after a voltage fluctuation.

For a rectangular modulated mains signal with modulation index m the relative voltage change d is:

$$d = 2m. \quad (4)$$

The relative voltage change (or voltage fluctuation) d is often expressed as a percentage.

An example of the parameters is shown in Figure 2.

Withdrawn

Documents
Document Sharing Hub

Full document details: IEC TR 61547-1 2017