IEC TR 61850-90-8

Edition 1.0 2016-04

TECHNICAL REPORT

colour inside

Communication networks and systems for power utility automation – Part 90-8: Object model for E-mobility

IEC TR 61850-90-8:2016-04(en)

Documents
Document Sharing Hub

Full document details: IEC TR 61850-90-8 2016

THIS PUBLICATION IS COPYRIGHT PROTECTED
Copyright © 2016 IEC, Geneva, Switzerland

All rights reserved. Unless otherwise specified, no part of this publication may be reproduced or utilized in any form or by any means, electronic or mechanical, including photocopying and microfilm, without permission in writing from either IEC or IEC's member National Committee in the country of the requester. If you have any questions about IEC copyright or have an enquiry about obtaining additional rights to this publication, please contact the address below or your local IEC member National Committee for further information.

IEC Central Office
3, rue de Varembé
CH-1211 Geneva 20
Switzerland

Tel.: +41 22 919 02 11
Fax: +41 22 919 03 00
info@iec.ch
www.iec.ch

About the IEC
The International Electrotechnical Commission (IEC) is the leading global organization that prepares and publishes International Standards for all electrical, electronic and related technologies.

About IEC publications
The technical content of IEC publications is kept under constant review by the IEC. Please make sure that you have the latest edition, a corrigenda or an amendment might have been published.

IEC Catalogue - webstore.iec.ch/catalogue
The stand-alone application for consulting the entire bibliographical information on IEC International Standards, Technical Specifications, Technical Reports and other documents. Available for PC, Mac OS, Android Tablets and iPad.

IEC publications search - www.iec.ch/searchpub
The advanced search enables to find IEC publications by a variety of criteria (reference number, text, technical committee,…). It also gives information on projects, replaced and withdrawn publications.

IEC Just Published - webstore.iec.ch/justpublished
Stay up to date on all new IEC publications. Just Published details all new publications released. Available online and also once a month by email.

Electropedia - www.electropedia.org
The world's leading online dictionary of electronic and electrical terms containing 20 000 terms and definitions in English and French, with equivalent terms in 15 additional languages. Also known as the International Electrotechnical Vocabulary (IEV) online.

IEC Glossary - std.iec.ch/glossary
65 000 electrotechnical terminology entries in English and French extracted from the Terms and Definitions clause of IEC publications issued since 2002. Some entries have been collected from earlier publications of IEC TC 37, 77, 86 and CISPR.

IEC Customer Service Centre - webstore.iec.ch/csc
If you wish to give us your feedback on this publication or need further assistance, please contact the Customer Service Centre: csc@iec.ch.

AVA Documents
Document Sharing Hub

Full document details: IEC TR 61850-90-8 2016

IEC TR 61850-90-8

Edition 1.0 2016-04

TECHNICAL REPORT

colour inside

Communication networks and systems for power utility automation – Part 90-8: Object model for E-mobility

INTERNATIONAL
ELECTROTECHNICAL
COMMISSION

ICS 33.200

ISBN 978-2-8322-3256-9

Warning! Make sure that you obtained this publication from an authorized distributor.

® Registered trademark of the International Electrotechnical Commission

Documents
Document Sharing Hub

Full document details: IEC TR 61850-90-8 2016

CONTENTS

FOREWORD 6
INTRODUCTION 8
1 Scope 9
2 Normative references 9
3 Terms, definitions and acronyms 10
3.1 Terms and definitions 10
3.2 Acronyms 16
3.3 Abbreviated terms 16
4 Document integration and structure 17
5 The link between the power grid and electric vehicles 18
5.1 General 18
5.2 E-Mobility actors and their roles 19
5.3 E-Mobility use cases 20
5.3.1 General 20
5.3.2 Identification (ID) (D2 & D4) 21
5.3.3 Charging status and control (E2 & E3) 21
5.3.4 Use Case in System A for DC charging (E2 & E3) 23
5.3.5 Common information model for electric vehicles 24
5.4 Description of information model 25
5.4.1 General 25
5.4.2 Plug present (PP) (AC and DC) 25
5.4.3 Outlet charging current rating 26
5.4.4 EVSE charging power rating 26
5.4.5 Charging cable rating 26
5.4.6 Charging infrastructure supply cable characteristics 28
5.4.7 Available connection types 28
5.4.8 EV connection type 28
5.4.9 EV connection state (AC) 29
5.4.10 EV connection state (DC) 30
5.4.11 EVSE PWM signaling 31
5.4.12 EV identification 32
5.4.13 EVSE identification 33
5.4.14 EV charge parameters 33
5.4.15 State of charge (SOC) 33
5.4.16 Isolation Test Fault 34
5.4.17 Short-circuit Test Fault 34
5.4.18 Welding detection 34
5.4.19 Loss of digital communication 34
5.4.20 Nameplate information 35
5.4.21 Data model references 35
5.4.22 Charge schedules 35
Annex A (informative) Common information model mappings for AC charging 39
A.1 General 39
A.2 Specific model definitions for basic charging with IEC 61851-1 support – Graphical representation of mapping IEC 61851-1 domain information 39

AVA Documents
Document Sharing Hub

Full document details: IEC TR 61850-90-8 2016

A.3 Specific model definitions for smart charging with ISO 15118 support – Graphical representation of mapping IEC 61851-1 and ISO 15118-2 domain information 39
Annex B (informative) Common information model mappings for DC charging 41
B.1 General 41
B.2 Specific model definitions for IEC 61851-23/24 system A – DC charging – Graphical representation of mapping IEC 61851-23/24 system A domain information 41
B.3 Specific model definitions for IEC 61851-23/24 system C – DC charging – Graphical representation of mapping IEC 61851-23/24 system C domain information 42
Annex C (normative) 61850 Logical Nodes for Electric Mobility 44
C.1 Overview 44
C.2 New and existing logical nodes 44
C.2.1 LN: E-Mobility supply equipment Name: DESE 44
C.2.2 LN: E-Mobility AC charging outlet Name: DEAO 46
C.2.3 LN: E-Mobility DC charging outlet Name: DEDO 49
C.2.4 LN: E-Mobility Electric Vehicle Name: DEEV 52
C.2.5 LN: Power cable Name: ZCAB 54
C.2.6 LN: Schedule Name: FSCH 55
C.2.7 Schedule states (ScheduleStateKind enumeration) 57
C.2.8 Scheduling interval types (ScheduleIntervalKind enumeration) 57
C.3 Example of an AC charging station model 58
C.3.1 General 58
C.3.2 Exploded view of DESE1 and DESE2 59
C.3.3 Exploded view of DEAO1 and DEAO2 59
C.3.4 Exploded view of DEEV1 and DEEV2 60
C.3.5 Exploded view of FSCH1 and FSCH2 61
C.4 Example of a DC charging station model (system A) 62
C.4.1 General 62
C.4.2 Exploded view of DESE1 and DESE2 63
C.4.3 Exploded view of DEDO1 and DEDO2 65
C.4.4 Exploded view of DEEV1 and DEEV2 66
Annex D (informative) Information exchange between EV, EVSE and CIO for charge scheduling 68
Annex E (informative) Architectural concepts (implementation guide) 69
E.1 Overview 69
E.2 Architectural concept for mapping ISO 15118 to IEC 61850 69
E.3 Architectural concept for mapping IEC 61851-23/24 system A to IEC 61850 71
Annex F (informative) Relevant standards for E-Mobility object model 72
F.1 Overview 72
F.2 Basic structure of IEC 62196 – Plugs, socket-outlets, vehicle couplers and vehicle inlets – Conductive charging of electric vehicles 72
F.3 Basic structure of IEC 61851 – Electric vehicle conductive charging system 73
F.4 Basic structure of ISO 15118 – Vehicle to grid communication interface 73
F.5 Basic structure of IEC 61980 – Electric vehicle wireless power transfer systems 75
Annex G (informative) Typical use of data objects in the charger domains 76
Bibliography 79

AVA Documents
Document Sharing Hub
Full document details: IEC TR 61850-90-8 2016

Figure 1 – Overall structure of IEC 61850 parts 17
Figure 2 – Overview on document structure 18
Figure 3 – Conceptual organization of Logical Devices and Logical Nodes of DER systems 19
Figure 4 – Generic role model of relevant actors for smart charging EVs [CEN BT N987] 20
Figure 5 – Communication architecture of System A 24
Figure 6 – IEC 61850 Logical Nodes overview, based on [IEEE VPPC2012] 25
Figure 7 – State of DC charging state in IEC 61851-23/24 system A 31
Figure 8 – Exemplary exchange of charge schedule information for an EVSE with one outlet, based on [IEEE VPPC2011] 37
Figure A.1 – Mapping of IEC 61851-1 domain information to IEC 61850-7-420 information model for AC charging 39
Figure A.2 – Mapping of ISO 15118-2 and IEC 61851-1 domain information to IEC 61850-7-420 information model for AC charging 40
Figure B.1 – Mapping of IEC 61851-23/24 system A domain information to IEC 61850-7-420 information model for DC charging 42
Figure B.2 – Mapping of IEC 61851-23/24 system C (ISO 15118-2 and IEC 61851-1) domain information to IEC 61850-7-420 information model for DC charging 43
Figure C.1 – Example of an AC charging station 58
Figure C.2 – Example of a DC charging station 63
Figure D.1 – EV, EVSE and CIO information exchange 68
Figure E.1 – Basic concept of mapping ISO 15118 V2G Communication Interface to IEC 61850 DERs with dedicated SECC in the EVSE managing one EV 69
Figure E.2 – Basic concept of mapping ISO 15118 V2G Communication Interface to IEC 61850 DERs with centralized SECC outside of EVSE managing a set of EVs 70
Figure E.3 – Basic concept of mapping IEC 61851-23/24 system A communication interface to IEC 61850 DERs 71
Figure F.1 – Overview of relevant E-Mobility ISO standards for the V2G interface, based on [EVS27 2013] 72
Figure F.2 – ISO 15118 document structure according to ISO/IEC 7498-1 OSI-layers, based on [IEEE VPPC2012] 75

Table 1 – Overview of use cases relevant to secondary actors [ISO 15118-1:2013] 21
Table 2 – Selected use cases E2 and E3 from [ISO 15118-1:2013] 22
Table 3 – Data objects for plug present 26
Table 4 – Data object for charging current rating 26
Table 5 – Data object for charging power rating 26
Table 6 – Resistor coding for vehicle AC connectors and plugs [IEC 61851-1] 27
Table 7 – Data object for AC charging cable rating 27
Table 8 – Data object for DC charging cable rating 27
Table 9 – Data objects allowing overload of a cable 28
Table 10 – Data objects for supported connection types of an outlet 28
Table 11 – Data object showing the selected connection type of an EV 29
Table 12 – Functions of control pilot pin [IEC 61851-1] 29
Table 13 – Data object showing the connection status on an outlet 30
Table 14 – DC connection status in IEC 61851-23/24 system A 30

AVA Documents
Document Sharing Hub

Full document details: IEC TR 61850-90-8 2016

Table 15 – Maximum current to be drawn by vehicle [IEC 61851-1] 32
Table 16 – Data objects for handling PWM related features on an outlet 32
Table 17 – Data object for EV nameplate information 32
Table 18 – Data object for EVSE nameplate information 33
Table 19 – Data objects for target setting and limit 33
Table 20 – Data object for showing SOC from the EV 34
Table 21 – Data object for status of an isolation test 34
Table 22 – Data object for status of a short-circuit test 34
Table 23 – Data object for status of welding test 34
Table 24 – Data object for loss of digital communication 35
Table 25 – Data objects for nameplate information 35
Table 26 – Data objects for logical node references 35
Table 27 – Data objects for a Local Limit Profile power schedule 38
Table 28 – Data objects for a Local Reservation Profile power schedule 38
Table C.1 – E-Mobility supply equipment logical node 45
Table C.2 – E-Mobility AC charging outlet logical node 47
Table C.3 – Literals of EVACConnectionStateKind 48
Table C.4 – Literals of EVACPlugStateKind 48
Table C.5 – Literals of EVACCableCapabilityKind 49
Table C.6 – E-Mobility DC charging outlet logical node 50
Table C.7 – Literals of EVDCConnectionStateAKind 51
Table C.8 – Literals of EVDCConnectionStateCKind 51
Table C.9 – Literals of EVDCCableCapabilityKind 52
Table C.10 – Literals of EVDCPlugStateKind 52
Table C.11 – E-Mobility electric vehicle logical node 53
Table C.12 – Literals of EVConnectionChargingKind 54
Table C.13 – Additions to power cable logical node 54
Table C.14 – Schedule logical node 56
Table C.15 – Literals of ScheduleStateKind 57
Table C.16 – Literals of ScheduleIntervalKind 58
Table C.17 – Example logical node instances 59
Table C.18 – Exploded view of DESE1 and DESE2 59
Table C.19 – Exploded view of DEAO1 and DEAO2 60
Table C.20 – Exploded view of DEEV1 and DEEV2 61
Table C.21 – Exploded view of FSCH1 and FSCH2 62
Table C.22 – Example logical node instances 63
Table C.23 – Exploded view of DESE1 and DESE2 64
Table C.24 – Exploded view of DEDO1 and DEDO2 65
Table C.25 – Exploded view of DEEV1 and DEEV2 67
Table G.1 – Use of data objects in charging systems 77

Documents
Document Sharing Hub
Full document details: IEC TR 61850-90-8 2016

INTERNATIONAL ELECTROTECHNICAL COMMISSION

COMMUNICATION NETWORKS AND SYSTEMS FOR POWER UTILITY AUTOMATION –

Part 90-8: Object model for E-mobility

FOREWORD

1) The International Electrotechnical Commission (IEC) is a worldwide organization for standardization comprising all national electrotechnical committees (IEC National Committees). The object of IEC is to promote international co-operation on all questions concerning standardization in the electrical and electronic fields. To this end and in addition to other activities, IEC publishes International Standards, Technical Specifications, Technical Reports, Publicly Available Specifications (PAS) and Guides (hereafter referred to as "IEC Publication(s)"). Their preparation is entrusted to technical committees; any IEC National Committee interested in the subject dealt with may participate in this preparatory work. International, governmental and non-governmental organizations liaising with the IEC also participate in this preparation. IEC collaborates closely with the International Organization for Standardization (ISO) in accordance with conditions determined by agreement between the two organizations.
2) The formal decisions or agreements of IEC on technical matters express, as nearly as possible, an international consensus of opinion on the relevant subjects since each technical committee has representation from all interested IEC National Committees.
3) IEC Publications have the form of recommendations for international use and are accepted by IEC National Committees in that sense. While all reasonable efforts are made to ensure that the technical content of IEC Publications is accurate, IEC cannot be held responsible for the way in which they are used or for any misinterpretation by any end user.
4) In order to promote international uniformity, IEC National Committees undertake to apply IEC Publications transparently to the maximum extent possible in their national and regional publications. Any divergence between any IEC Publication and the corresponding national or regional publication shall be clearly indicated in the latter.
5) IEC itself does not provide any attestation of conformity. Independent certification bodies provide conformity assessment services and, in some areas, access to IEC marks of conformity. IEC is not responsible for any services carried out by independent certification bodies.
6) All users should ensure that they have the latest edition of this publication.
7) No liability shall attach to IEC or its directors, employees, servants or agents including individual experts and members of its technical committees and IEC National Committees for any personal injury, property damage or other damage of any nature whatsoever, whether direct or indirect, or for costs (including legal fees) and expenses arising out of the publication, use of, or reliance upon, this IEC Publication or any other IEC Publications.
8) Attention is drawn to the Normative references cited in this publication. Use of the referenced publications is indispensable for the correct application of this publication.
9) Attention is drawn to the possibility that some of the elements of this IEC Publication may be the subject of patent rights. IEC shall not be held responsible for identifying any or all such patent rights.

The main task of IEC technical committees is to prepare International Standards. However, a technical committee may propose the publication of a technical report when it has collected data of a different kind from that which is normally published as an International Standard, for example "state of the art".

IEC TR 61850-90-8, which is a technical report, has been prepared by IEC technical committee 57: Power systems management and associated information exchange.

The text of this technical report is based on the following documents:

Enquiry draft	Report on voting
57/1603/DTR	57/1651/RVC

Full information on the voting for the approval of this technical report can be found in the report on voting indicated in the above table.

AVA Documents
Document Sharing Hub

Full document details: IEC TR 61850-90-8 2016

This publication has been drafted in accordance with the ISO/IEC Directives, Part 2.

A list of all parts in the IEC 61850 series, published under the general title *Communication networks and systems for power utility automation*, can be found on the IEC website.

The committee has decided that the contents of this publication will remain unchanged until the stability date indicated on the IEC website under "http://webstore.iec.ch" in the data related to the specific publication. At this date, the publication will be

- reconfirmed,
- withdrawn,
- replaced by a revised edition, or
- amended.

A bilingual version of this publication may be issued at a later date.

IMPORTANT – The 'colour inside' logo on the cover page of this publication indicates that it contains colours which are considered to be useful for the correct understanding of its contents. Users should therefore print this document using a colour printer.

Documents
Document Sharing Hub

Full document details: IEC TR 61850-90-8 2016

INTRODUCTION

This part of IEC 61850-90, which is a technical report, describes how current standardization for Electric Road Vehicles (EV) and the Vehicle-to-Grid Communication Interface can be linked to IEC 61850-7-420, which deals with Distributed Energy Resources (DER). This technical report provides necessary background information and proposes an object model for E-Mobility in order to establish an EV plugged into the power grid as DER according to the principles of IEC 61850-7-420. The basic information modeling in IEC 61850 and IEC 61850-7-420 already covers a lot of needs for the E-Mobility domain. Missing parts can be modeled as new logical nodes and data objects, which this technical report defines.

NOTE Editorial Notes on this technical report are summarized in Annex G.

Documents
Document Sharing Hub

Full document details: IEC TR 61850-90-8 2016

COMMUNICATION NETWORKS AND SYSTEMS FOR POWER UTILITY AUTOMATION –

Part 90-8: Object model for E-mobility

1 Scope

This part of IEC 61850-90, which is a technical report, shows how IEC 61850-7-420 can be used to model the essential parts of the E-Mobility standards related to Electric Vehicles and Electric Vehicle Supply Equipments (IEC 62196, IEC 61851, IEC 15118) and the Power system (IEC 61850-7-420), in order to secure a high level of safety and interoperability.

The namespace of this document is:

- "(TR) IEC 61850-90-8:2015"

The name space "IEC 61850-90-8" is considered as "Transitional" since the model is expected to be included in the next edition of IEC 61850-7-420 [1]. Potential extensions/modifications may happen if/when the model is given International Standard status. The most optimal backward compatibility with the original content will be strived for during this move.

In accordance with the status of the ISO 15118 series and systems determined in IEC 61851-23 and -24, this technical report focuses on EV charging processes only. Discharging processes in order to support grid services are out of scope, but will be adopted when available in future versions of ISO 15118-2 and IEC 61851-1, -23 and -24.

2 Normative references

The following documents, in whole or in part, are normatively referenced in this document and are indispensable for its application. For dated references, only the edition cited applies. For undated references, the latest edition of the referenced document (including any amendments) applies.

IEC 61850-7-4:2010, *Communication networks and systems for power utility automation – Part 7-4: Basic communication structure – Compatible logical node classes and data object classes*

IEC 61850-7-420:2009, *Communication networks and systems for power utility automation – Part 7-420: Basic communication structure – Distributed energy resources logical nodes*

IEC 61851-1:2010, *Electric vehicle conductive charging system – Part 1: General requirements*

IEC 61851-21-1:−, *Electric vehicle conductive charging system – Part 21-1: Electric vehicle onboard charger EMC requirements for conductive connection to a.c./d.c. supply*[1]

IEC 61851-21-2:−, *Electric vehicle conductive charging system – Part 21-2: EMC requirements for OFF board electric vehicle charging systems*[1]

[1] To be published.

Documents
Document Sharing Hub

Full document details: IEC TR 61850-90-8 2016

IEC 61851-23:2014, *Electric vehicle conductive charging system – Part 23: DC electric vehicle charging station*

IEC 61851-24:2014, *Electric vehicle conductive charging system – Part 24: Digital communication between a d.c. EV charging station and an electric vehicle for control of d.c. charging*

IEC 62196-1:2014, *Plugs, socket-outlets, vehicle connectors and vehicle inlets – Conductive charging of electric vehicles – Part 1: General requirements*

IEC 62196-2:2011, *Plugs, socket-outlets, vehicle connectors and vehicle inlets – Conductive charging of electric vehicles – Part 2: Dimensional compatibility and interchangeability requirements for a.c. pin and contact-tube accessories*

IEC 62196-3:2014, *Plugs, socket-outlets, vehicle connectors and vehicle inlets – Conductive charging of electric vehicles – Part 3: Dimensional compatibility and interchangeability requirements for d.c. and a.c./d.c. pin and contact-tube vehicle couplers*

ISO 15118-1:2013, *Road vehicles – Vehicle to grid communication interface – Part 1: General information and use-case definition*

ISO 15118-2:2014, *Road vehicles – Vehicle-to-grid communication interface – Part 2: Network and application protocol requirements*

ISO 15118-3:2015, *Road vehicles – Vehicle-to-grid communication interface communication interface – Part 3: Physical and data link layer requirements*

3 Terms, definitions and acronyms

For the purposes of this document, the following terms, definitions and acronyms apply.

3.1 Terms and definitions

3.1.1
Balance Responsible Party
BRP
party that has a contract proving financial security and identifying balance responsibility with the Imbalance Settlement Responsible of the Market Balance Area entitling the party to operate in the market

Note 1 to entry: This is the only role allowing a party to nominate energy on a wholesale level.

Note 2 to entry: The meaning of the word "balance" in this context signifies that that the quantity contracted to provide or to consume must be equal to the quantity really provided or consumed.

Note 3 to entry: This is equivalent to "Program responsible party" in the Netherlands, "Balance group manager" in Germany and "market agent" in Spain.

[SOURCE: ENTSO-E RM:2014-01]

3.1.2
CHArge de Move
CHAdeMO
Socket, connector and charging system for DC quick charging, equivalent to "move by charge"

Documents
Document Sharing Hub

Full document details: IEC TR 61850-90-8 2016

3.1.3
Charging Infrastructure Operator
CIO
legal entity that operates and maintains the EVSE

Note 1 to entry: It is not obligatory that there is an operator for the EVSE, but e. g. in case of ID validation or Smart Charging where communication is needed, the responsible entity regarding the communication will be the E-Mobility Infrastructure Operator.

Note 2 to entry: This entry corresponds to the Charging Station Operator (CSO or CSIO) in the upcoming IEC TS 62913-2-4[2].

3.1.4
Charging Station
single or multiple EV Supply Equipment(s)

Note 1 to entry: See also EVSE.

3.1.5
Building Energy Management System
BEMS
providers, delivering the systems which facilitate management and control of building facilities, realizing energy saving and increasing comfortability of users of buildings and making full use of the state-of-the-art Information Technology.

[SOURCE: EG3 Deliverable:2011]

3.1.6
Demand Clearing House
DCH
entity for grid negotiation that provides information on the load of the grid

Note 1 to entry: The demand clearing house mediates between two clearing partners – a SECC and the part of the power grid connected to this SECC. Most likely this function will be served by a system operator.

Note 2 to entry: Demand Clearing House and meter operator may exchange information with each other as well as with other actors.

EXAMPLE A DCH typically fulfils following tasks:

- Collect all necessary information from all parts of the power grid, e.g. current or forecasted load of local transformers, distribution grid, power substation, transmission grid, transmission substation, power plants (incl. renewable energies), and predicted charging schedules submitted by EVCCs.A Charging Station represents a single or multiple EV Supply Equipment(s) (see also EVSE).
- Consolidate the collected grid information to a ―grid profile‖ and offer it to SECCs / EVCCs.
- Provide charging schedule proposal for the connected EV to the requesting SECC based on the collected grid profile.
- Inform the SECC as to the necessity for an updated charging schedule if the grid profile has changed.
- On the contrary, the SECC will inform the demand clearing house if the EV's charging schedule has changed.

[SOURCE: ISO 15118-1:2013]

3.1.7
digital communication
digitally encoded information exchanged between an EV charging station and an EV, as well as the method by which it is exchanged

Note 1 to entry:

- 1. CAN based using a dedicated data communication circuit; CAN protocol is given in ISO 11898-1; refer to IEC 61851-24:2014, Annex A and Annex B for specific implementation details;

[2] Under consideration.

Documents
Document Sharing Hub

Full document details: IEC TR 61850-90-8 2016

- 2. Powerline Communication (Homeplug Green PHY TM) over the control pilot line; refer to IEC 61851-24:2014, Annex C for specific implementation details.

3.1.8
Distribution System Operator
DSO
natural or legal person responsible for operating, ensuring the maintenance of and, if necessary, developing the distribution system in a given area and, where applicable, its interconnections with other systems and for ensuring the long-term ability of the system to meet reasonable demands for the distribution of electricity, according to Article 2.6 of the Directive

Note 1 to entry: Moreover, the DSO is responsible for regional grid access and grid stability, integration of renewables at the distribution level and regional load balancing.

[SOURCE: EG3 Deliverable:2011]

3.1.9
E-Mobility Clearing House
entity mediating between two clearing partners to provide validation services for roaming regarding contracts of different E-Mobility Service Providers

Note 1 to entry: The E-Mobility clearing house's purpose is to:

- collect all necessary contract information like Contract ID, E-Mobility Service Provider (EMSP), communication path to E-Mobility Service Provider, roaming fees, begin- and end-date of contract, etc.
- provide SECC with confirmation that an E-Mobility Service Provider (EMSP) will pay for a given Contract ID (authentication of valid contract) and transfer a corresponding Service Detail Record (SDR) after each charging session to the corresponding E-Mobility Service Provider (EMSP).

Note 2 to entry: E-Mobility Clearing House, E-Mobility Service Provider (EMSP) and Meter Operator (MO) may exchange information with each other as well as other actors.

3.1.10
E-Mobility Customer
legal entity being associated to an E-Mobility Service Provider

Note 1 to entry: The E-Mobility Customer may be bound to an E-Mobility Service Provider by the legal means of a contract.

3.1.11
E-Mobility Infrastructure Producer
legal entity that manufactures E-Mobility infrastructure components (e. g. EVSEs)

3.1.12
E-Mobility Infrastructure Owner
legal entity that owns E-Mobility infrastructure (e.g. EVSEs)

3.1.13
E-Mobility Service Provider
EMSP
legal entity that provides services to the Electric Vehicle User (EVU) related to the operation of an EV

Note 1 to entry: This definition is also considered in the upcoming IEC TS 62913-4[3].

[3] Under consideration.

Documents
Document Sharing Hub

Full document details: IEC TR 61850-90-8 2016

3.1.14
Electric Energy Meter
EEM
equipment to measure electrical energy by integrating power with respect to time, which complies with IEC 62052-11 and IEC 62053-21, IEC 62053-52

Note 1 to entry: Some use cases need the amount of electric energy measured by the electric energy meter and communicated through the SECC to the EVCC, while other scenarios do not need a separate electric energy meter. The EV may get this information and use it according to the intentions of the OEM.

Note 2 to entry: The EEM may be operated by a Metering Operator.

[SOURCE: ISO 15118-1:2013]

3.1.15
Electric Vehicle
EV
any vehicle propelled by an electric motor drawing current from a rechargeable storage battery or from other portable energy storage devices (rechargeable, using energy from a source off the vehicle such as a residential or public electric service), which is manufactured primarily for use on public streets, roads or highways

[SOURCE: ISO 15118-1:2013]

3.1.16
Electric Vehicle Communication Controller
EVCC
embedded system, within the vehicle, that implements the communication between the vehicle and the SECC in order to support specific functions

Note 1 to entry: Such specific function could be e.g. controlling in- and output channels, encryption, or data transfer between vehicle and SECC.

[SOURCE: ISO 15118-1:2013]

3.1.17
Electric Vehicle Manufacturer
OEM
legal entity responsible for all the technologies inside the EV also in relation to the data communication

Note 1 to entry: This is commonly known as OEM (Original Equipment Manufacturer).

3.1.18
Electric Vehicle Supply Equipment
EVSE
conductors, including the phase(s), neutral and protective earth conductors, the EV couplers, attached plugs, and all other accessories, devices, power outlets or apparatuses installed specifically for the purpose of delivering energy from the premises wiring to the EV and allowing communication between them as necessary

Note 1 to entry: For the purposes of this document, it is assumed that an EVSE may host multiple outlets each being managed according to IEC 61851-1 Annex A.

[SOURCE: ISO 15118-1:2013]

3.1.19
Electric Vehicle User
EVU
person or legal entity using the vehicle and providing information about driving needs and consequently influences charging patterns

AVA Documents
Document Sharing Hub

Full document details: IEC TR 61850-90-8 2016

Note 1 to entry: Driving needs such as range and time of availability are necessary to achieve the most appropriate charging scenario.

Note 2 to entry: There shall be a relationship/association between the EVU and the E-Mobility Customer (EC). However, the exact nature of this relationship/association depends on the underlying business models and use cases.

[SOURCE: ISO 15118-1:2013]

3.1.20
Electricity Provider
EP
body of secondary actor to provide electricity

3.1.21
Energy Market
commodity markets that deal specifically with the trade and supply of energy (purchase and sale of energy products)

Note 1 to entry: Energy market may refer to an electricity market, but can also refer to other sources of energy.

Note 2 to entry: It typically describes a wholesale market for energy producers and energy retailers. Other participants in the wholesale energy market include financial intermediaries, energy traders and large consumers.

3.1.22
energy Supplier
retailer
entity that offers contracts for supply of energy to a consumer (the supply contract)

Note 1 to entry: Within this role the energy Supplier will initiate DSM activities.

Note 2 to entry: In some countries referred to as Retailer.

3.1.23
High Level Communication
HLC
bidirectional digital communication using protocol and messages specified in ISO 15118-2 and physical and data link layer specified in ISO 15118-3

Note 1 to entry: High-level communication in ISO 15118 is compliant to the term digital communication in SAE J1772/2836/2847/2931.

[SOURCE:ISO 15118-1:2013]

3.1.24
Meter Operator
MO
party responsible for installing, maintaining, testing, certifying and decommissioning physical meters

[SOURCE: ENTSO-E RM:2014-01]

3.1.25
Power Outlet
part of a plug and socket-outlet intended to be installed with the fixed wiring

Note 1 to entry: All power outlets shall have the pilot function.

[SOURCE: ISO 15118-1:2013]

Documents
Document Sharing Hub
Full document details: IEC TR 61850-90-8 2016

3.1.26
Primary Actor
PA
role involved directly in the charging process

[SOURCE: ISO 15118-1:2013]

3.1.27
Secondary Actor
SA
role involved indirectly in the charging process

Note 1 to entry: Secondary actors may exchange information between each other.

Note 2 to entry: Secondary actors could also be a single entity.

[SOURCE: ISO 15118-1:2013]

3.1.28
Service Detail Record
SDR
data package of a charge or service related session with all necessary information that an E-Mobility Service Provider needs for billing or for informing the customer about the session

Note 1 to entry: Some data may be sent from EVSE. Some data originally be owned by E-Mobility Clearing House. Some data may be created at E-Mobility Clearing House. Some record to be sent to E-Mobility Service Provider for billing or informing their customers.

[SOURCE: ISO 15118-1:2013]

3.1.29
Supply Equipment Communication Controller
SECC
entity which implements the communication to one or multiple EVCCs according to ISO 15118-2 and which may be able to interact with secondary actors

Note 1 to entry: Further details regarding possible architectures are given in Annex A.

Note 2 to entry: Functions of a supply equipment communication controller could be controlling in- and output channels, encryption of data, or data transfer between vehicle and SECC.

[SOURCE: ISO 15118-1:2013]

3.1.30
System Operator
SO
party that is responsible for a stable power system operation (including the organisation of physical balance) through a transmission grid in a geographical area

Note 1 to entry: The System Operator will also determine and be responsible for cross border capacity and exchanges. If necessary he may reduce allocated capacity to ensure operational stability.

Note 2 to entry: Transmission as mentioned above means "the transport of electricity on the extra high or high voltage network with a view to its delivery to final customers or to distributors. Operation of transmission includes as well the tasks of system operation concerning its management of energy flows, reliability of the system and availability of all necessary system services." (Definition taken from the ENTSO-E RGCE Operation handbook Glossary).

Note 3 to entry: Additional obligations may be imposed through local market rules.

[SOURCE: ENTSO-E RM:2014-01]

Documents
Document Sharing Hub

Full document details: IEC TR 61850-90-8 2016

3.2 Acronyms

AC	Alternating Current
BEMS	Building Energy Management System
BRP	Balance Responsible Party
CIO	Charging Infrastructure Operator
CP	Control Pilot
DC	Direct Current
DCH	Demand Clearing House
DSM	Demand Side Management
DSO	Distribution System Operator
EEM	Electric Energy Meter
EIM	External Identification Means
EMSP	E-Mobility Service Provider
EV	Electric Vehicle
EVCC	Electric Vehicle Communication Controller
EVSE	Electric Vehicle Supply Equipment
EVU	Electric Vehicle User
HLC	High Level Communication
MO	Meter Operator
OEM	Original Equipment Manufacturer
PA	Primary Actor
PCC	Point of Common Coupling
PnC	Plug & Charge
PWM	Pulse Modulated Signal
RFID	Radio Frequency Identification
SA	Secondary Actor
SDR	Service Detail Record
SOC	State of Charge
SECC	Supply Equipment Communication Controller
TR	Technical Report
VAS	Value-Added Services

3.3 Abbreviated terms

Clause 4 of IEC 61850-7-4:2010 defines abbreviated terms for building concatenated data object names. Additional abbreviated terms are:

Term	Description	Term	Description
Cab	Cable	Cha	Charging
Comm	Communication		
Conn	Connection	DC	Direct Current
Dig	Digital	E	Earth
EV	Electrical Vehicle	EVSE	EV Supply Equipment
Id	ID / Identification	Plg	Plug
Soc	State of charge	Sys	System

Documents
Document Sharing Hub
Full document details: IEC TR 61850-90-8 2016

4 Document integration and structure

The main idea of this technical report is to integrate plugged-in Electric Vehicles as a specific form of Distributed Energy Resource according to the paradigms defined in IEC 61850. The approach is based upon establishing a logical node model for EVs as part of IEC 61850-7-420. Figure 1 provides an overview on how IEC 61850-7-420 is integrated into the series of standards defined in IEC 61850.

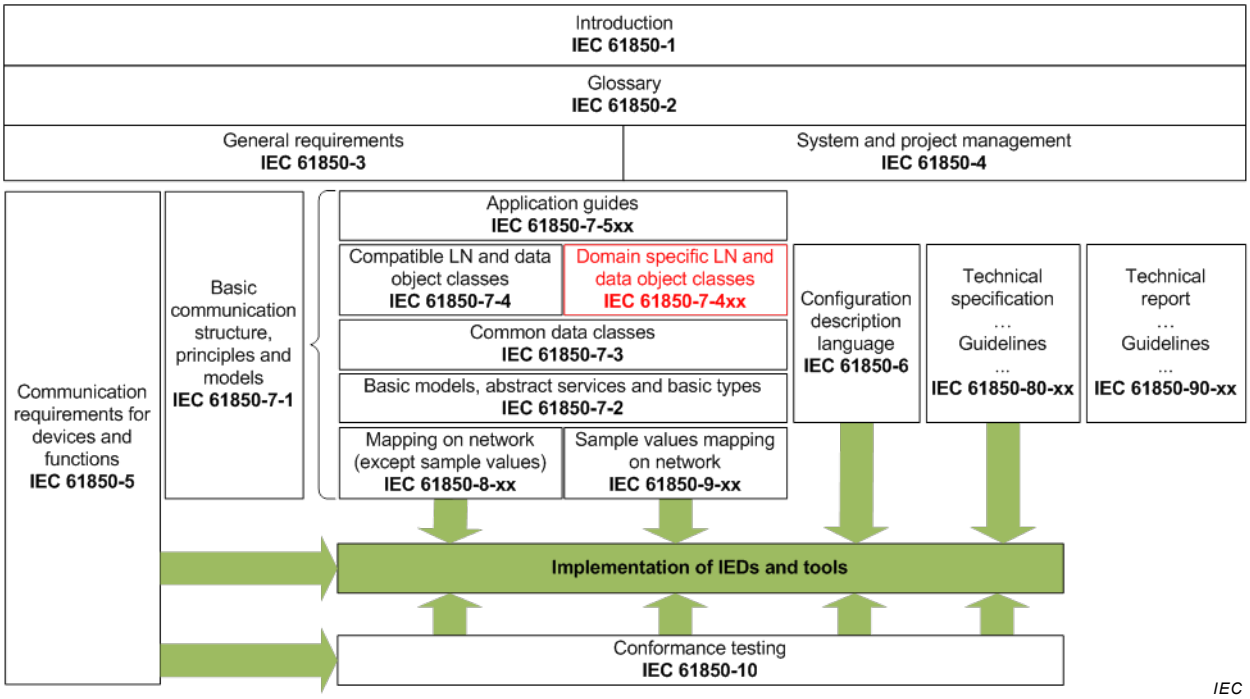

Figure 1 – Overall structure of IEC 61850 parts

IEC 61850-7-420 is called Communication networks and systems for power utility automation – Basic communication structure – Distributed energy resources logical nodes [IEC 61850-7-420] and defines the IEC 61850 information models for the information exchange between distributed energy resources (DER), e.g. including distributed generating units and storage devices, including reciprocating engines, fuel cells, micro turbines, PV, combined heat and power units and energy storage. IEC 61850-7-420 uses existing Logical Nodes of IEC 61850-7-4 as far as possible and defines new DER specific Logical Nodes when necessary.

This technical report is structured as shown in Figure 2. The main part of this document includes a common information model for AC and DC-based charging of EVs according to the IEC 61850-7-420 paradigms. The Annexes then provide specializations of this common information model and concrete mappings to various realizations of AC or DC-based charging approaches for EVs. This structure was chosen to cope with already existing charging approaches as well as to cope with future extensions (e.g. wireless power transfer (WPT)).

NOTE The DC charging system referred to as 'System B' is only partially modelled in this technical report.

Documents
Document Sharing Hub
Full document details: IEC TR 61850-90-8 2016

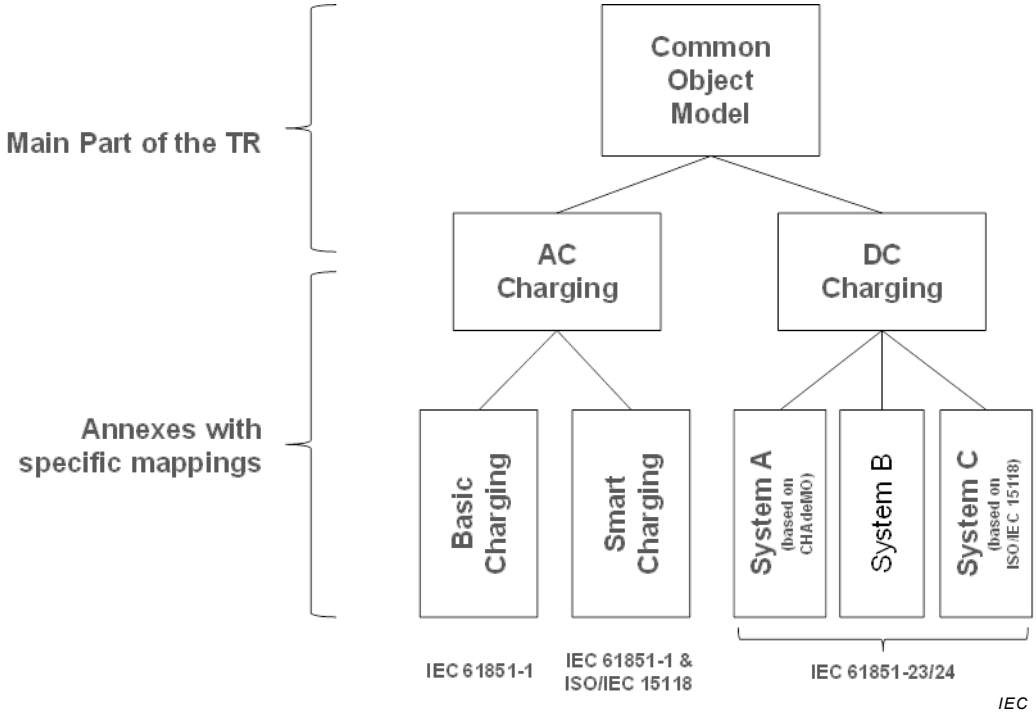

Figure 2 – Overview on document structure

5 The link between the power grid and electric vehicles

5.1 General

It is important to have a link between the power grid and the electric vehicles because:

- The most important success criteria for the EV will be the capability to charge when needed, which could conflict with the current power grid (low voltage distribution grid) at peak hours. A link between the EV and the power grid operator could make the difference.
- Using electricity instead of fossil fuel will lower the transportation cost for the users especially if the charge can be scheduled to 'low price periods', which requires a link between the EV user, the EV and the energy market.
- Many studies and reports have shown that the transport sector is one of the major players for CO_2 emissions and EV could be the solution to this problem given that renewable energy can be used for charging. A link between the power grid (Distributed Energy Resources like Wind and Solar) and the EV are needed if this should be the case.
- EVs could act as energy storage for volatile energy generators such as wind power plants or PV plants. This stored energy can then be fed in the grid in times when more energy is requested on the energy market than currently generated, given that the EV user is paid the amount of money he demands. A link between the EV user, the EV and the energy market is required.
- EVs could provide reactive power to support voltage stability. This requires a link between the EV user, the EV and the energy market.

A link or 'information exchange' between the power grid operators, the electric vehicle and the user, is an essential part of the future infrastructure for E-Mobility. International standardization is needed for harmonization between the different actors involved.

The criteria shown above require accessible and connected charging infrastructures in terms of information exchange. Furthermore the criteria show analogies to other forms of DERs like battery storage systems. Hence the approach of this technical report is to provide an information model for charging infrastructures which is consistent with the IEC 61850-7-420

AVA Documents Document Sharing Hub

paradigms. This simplifies integrating E-Mobility with other forms of DERs in the long term. Figure 3 shows a general hierarchical structure of the information model of IEC 61850.

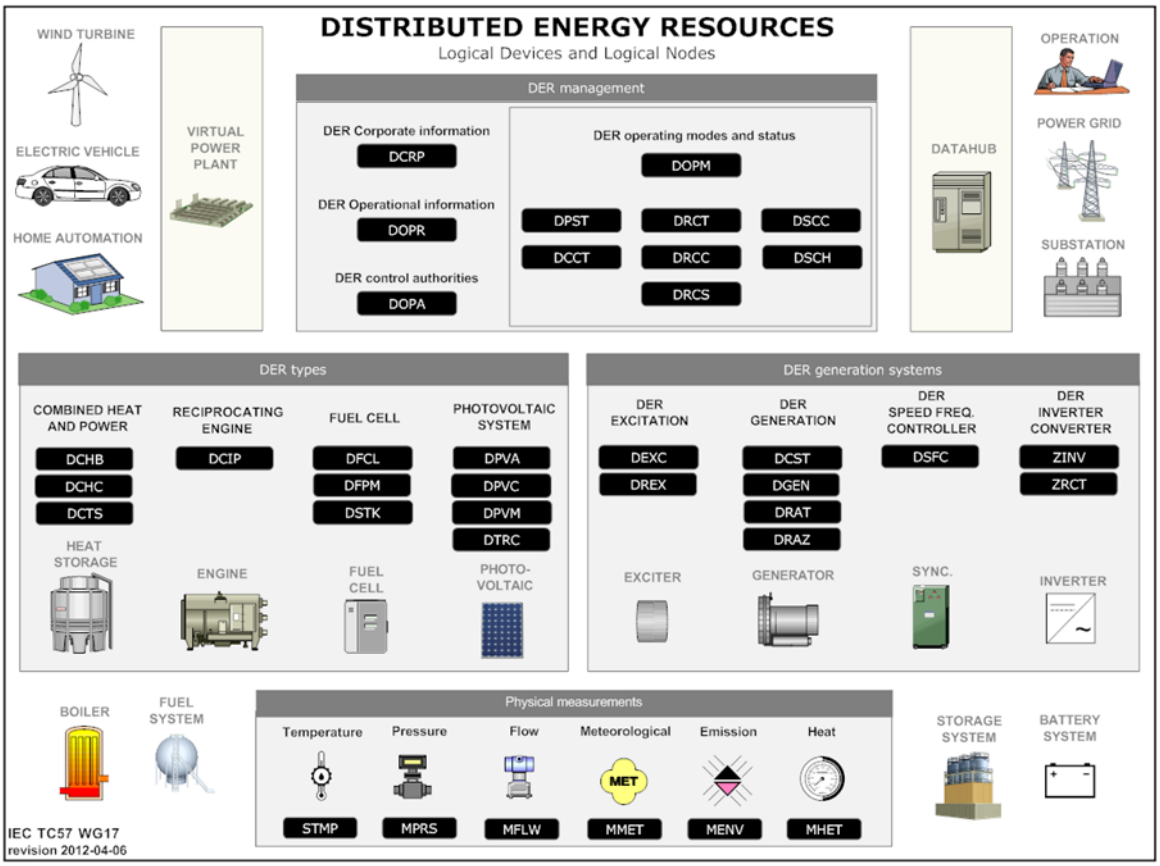

Figure 3 – Conceptual organization of Logical Devices and Logical Nodes of DER systems

NOTE While E-Mobility can be used for Demand Side Management (DSM), this is not in the scope of this technical report.

5.2 E-Mobility actors and their roles

The E-Mobility domain involves a multitude of new stakeholders for charging EVs. The diagram in Figure 4 provides an overview of the generic role model for actors involved on both the EV side (green elements) and the power system (blue elements).

Documents
Document Sharing Hub
Full document details: IEC TR 61850-90-8 2016

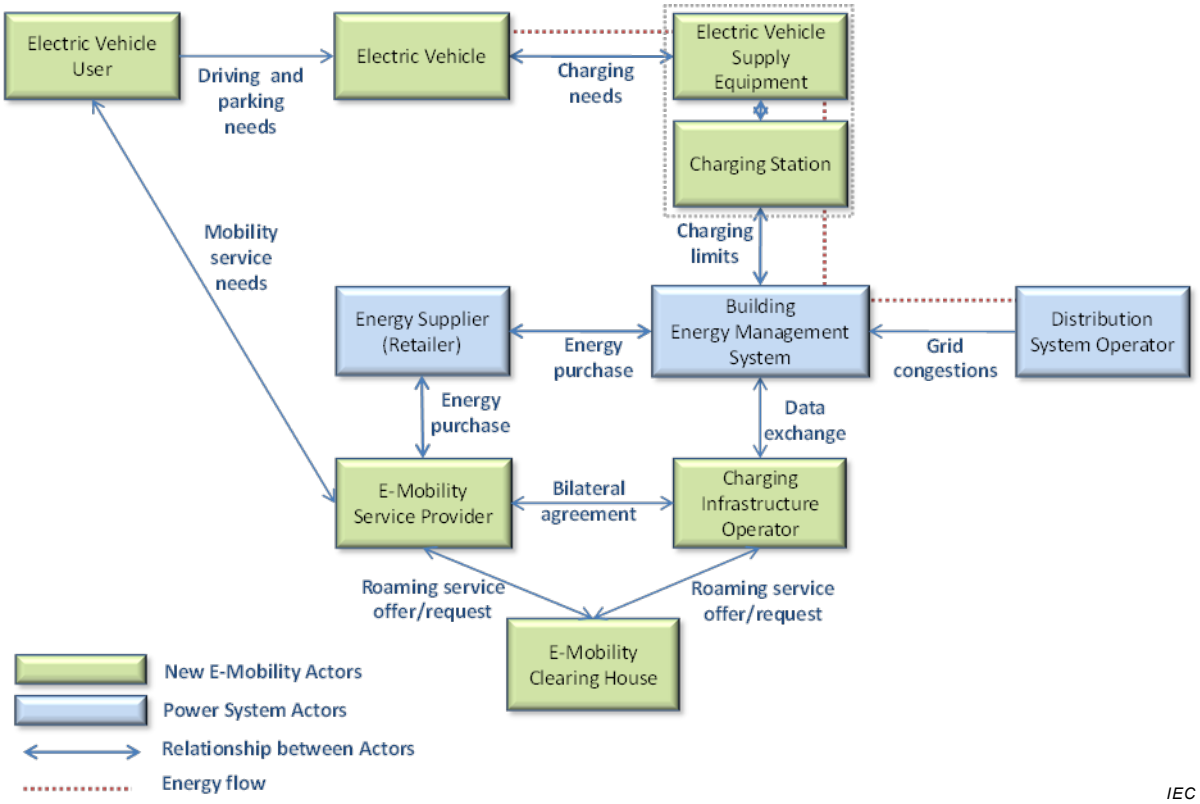

NOTE The diagram may not be exhaustive with respect to real-world actors.

Figure 4 – Generic role model of relevant actors for smart charging EVs [CEN BT N987]

Each of the actors involved has a specific role in the context of this technical report. In a real-life scenario more actors could be combined into one legal entity. For example, the Charging Infrastructure Operator and the E-Mobility Service Provider could be the same legal entity.

The role model considers both public and private charging scenarios. In the public scenario more service providers could share a charging spot operated by a 3rd party.

All the actors are defined in 3.1.

5.3 E-Mobility use cases

5.3.1 General

The standards in the E-Mobility domain mainly consider the Electric Vehicle and the Supply Equipment for delivering energy to the vehicle. From the overview provided in Subclause 3.1 only ISO 15118 refers to interactions beyond the EV (Electric Vehicle) and EVSE (Electric Vehicle Supply Equipment) to Secondary Actors (e.g. DSO, BRP, MO, Service providers etc.).

The use cases listed in Table 1 are a subset of the use cases from [ISO 15118-1:2013], which also include information exchange with Secondary Actors that are relevant for the proposed information model.

NOTE 1 System A does not use ISO 15118 communication system. System A achieves the use case of 3.2.3.

NOTE 2 Use cases with a grey background are not included in this technical report but may be considered in a future version.

Documents
Document Sharing Hub
Full document details: IEC TR 61850-90-8 2016

NOTE 3 This technical report is a step ahead of the upcoming IEC TS 62913-2-4[4], which is intended to publish informative use cases on this domain. The editors have tried to align the contents of both documents as much as possible. At the time of publication of this technical report, the question remains open whether the upcoming IEC TS 62913-2-4 will provide the level of detail required for modelling as needed by this technical report.

Table 1 – Overview of use cases relevant to secondary actors [ISO 15118-1:2013]

ID	Use case name
C1	Certificate update
C2	Certificate installation
D2	Authentication from EV with Authorisation from secondary actors
D4	Identification at the EVSE with validation from the secondary actor
E2	Optimised charging with scheduling from the secondary actor
E3	Optimised charging with scheduling at EV
F4	Reactive power compensation
F5	Vehicle to grid support
G1	Value-added services
G2	Charging details

5.3.2 Identification (ID) (D2 & D4)

ISO 15118-2 differentiates between two different types of identification: “External Identification Means (EIM)” and ”Plug & Charge (PnC)” identification mode. However, the utilized identification mode does not have any relevance to the underlying information model for the IEC 61850 DER system. Identification is performed before the start of the charging process (energy flow). For the scope of this technical report these use cases are only relevant for the nameplate information of the LN defined in this technical report.

5.3.3 Charging status and control (E2 & E3)

ISO 15118-2 also defines means for control of the charging process. It defines in particular the negotiation of a charge schedule as well as renegotiation of such a schedule during the charging process if e.g. supply situation changes. In order to harmonize the ISO 15118-2 communication interface specification with the information model for E-Mobility, Subclauses 5.3.4 and 5.3.5 introduce the complete AC and DC charging sequences according to ISO 15118-2 and provide a detailed mapping of message elements according to ISO 15118-2 to the data objects being previously defined in this technical report.

Table 2 shows the selected use cases.

4 Under consideration.

Documents
Document Sharing Hub

Full document details: IEC TR 61850-90-8 2016

Table 2 – Selected use cases E2 and E3 from [ISO 15118-1:2013]

ID	Use case name	Description
E2	Optimised charging with scheduling from the secondary actor	This use case covers the AC charging process with information about local installation, grid schedule and sales tariff table. With this, the EVSE can dynamically react to changes in the supply chain to reduce peak demand or oversupply situations. Additionally, the behaviour of the vehicle while charging becomes transparent to secondary actors in order to enhance electricity supply scheduling. The secondary actor needs to propose a charging schedule to the SECC, based on actual information about the local installation (e.g. power limits, local power generation), grid schedule and sales tariff table. It is necessary that EVCC, SECC and secondary actor have each the possibility to trigger a re-scheduling of the charging schedule. The Involved actors are: • Primary actors: EV, EVCC EVSE, SECC • Secondary actors: DCH, E-Mobility Operator Scenario descriptions: • USER inputs —Target set‖ at EV • EV calculates the required amount of energy needed in order to fully charge (Wh) the battery for the user-provided departure time. • EVCC sends the required energy amount, departure time and charging capability of the EV to the SECC, which might forward it to a secondary actor. • A secondary actor collects —Demand and prognosis. (e.g. Local physical limits from EVSE, local power generation, grid schedule from DCH, Sales tariff table from EP or E-Mobility Operator) NOTE This action might be performed prior to the charging event and could therefore be sent to the SECC. • A secondary actor or the SECC executes —Level selector to provide input for charging schedule • A secondary actor or the SECC calculates —Charging schedule • EVSE picks up the current limitation of —Charging schedule for —Charging Control‖. • SECC sends the current limitation to —EVCC. • EV will start charging according to the current limitation

Documents
Document Sharing Hub
Full document details: IEC TR 61850-90-8 2016

ID	Use case name	Description
E3	Optimised charging with scheduling at EV	This use case covers the AC charging process with information about local installation, grid schedule and sales tariff table. With this the EV can react on changes in the supply chain to reduce peak demand or oversupply situations. Additionally the behaviour of the vehicle while charging becomes transparent to secondary actors in order to enhance electricity supply scheduling. The secondary actor needs to propose a charging schedule to the SECC, based on actual information about the local installation (e.g. power limits, local power generation), grid schedule and sales tariff table. It is necessary that the EVCC, SECC and secondary actor each have the possibility to trigger a re-scheduling of the charging schedule. The actors involved are: • Primary actors: EV, EVCC EVSE, SECC. • Secondary actors: DCH, E-Mobility Operator. Scenario descriptions: • USER inputs —Target setll at EV. • EV calculates the required amount of energy required for the charging (Wh) and the departure time to meet the target. • EVCC sends the calculated value and the charging capability of EV to the SECC, which might forward it to a secondary actor. • A secondary actor collects —Demand and prognosis. (e.g. grid schedule from DCH, Sales tariff table from EP or E-Mobility Operator) and forwards this in-formation to the SECC. NOTE This action might be performed prior to the charging event and could therefore been sent to the SECC. • The SECC provides grid schedule, sales tariff table and local physical limits to the EVCC. • The EV executes —Level selector to provide input for the charging schedule. • The EV calculates —Charging schedule and shall send the schedule to the SECC for commitment. EV picks up the current limitation of —Charging Schedule for —Charging Control. • EV will start charging according to the current limitation

5.3.4 Use Case in System A for DC charging (E2 & E3)

For System A, an EVSE(Case1) or a unit coordinating with an EVSE(Case2) communicate with the upstream equipment in power grid system as shown in Figure 5. When the power grid system requires a peak shift or a demand response to DER, the EVSE stops, limits or schedules power output to achieve load leveling and demand restraint during power shortages.

In case a discharging function is added (see NOTE), System A conducts V2G (Vehicle to Grid) in order to keep the supply-demand balance.

NOTE IEC 61851-23 and -24 are currently being revised to add the requirements for the discharging function.

Documents
Document Sharing Hub

Full document details: IEC TR 61850-90-8 2016

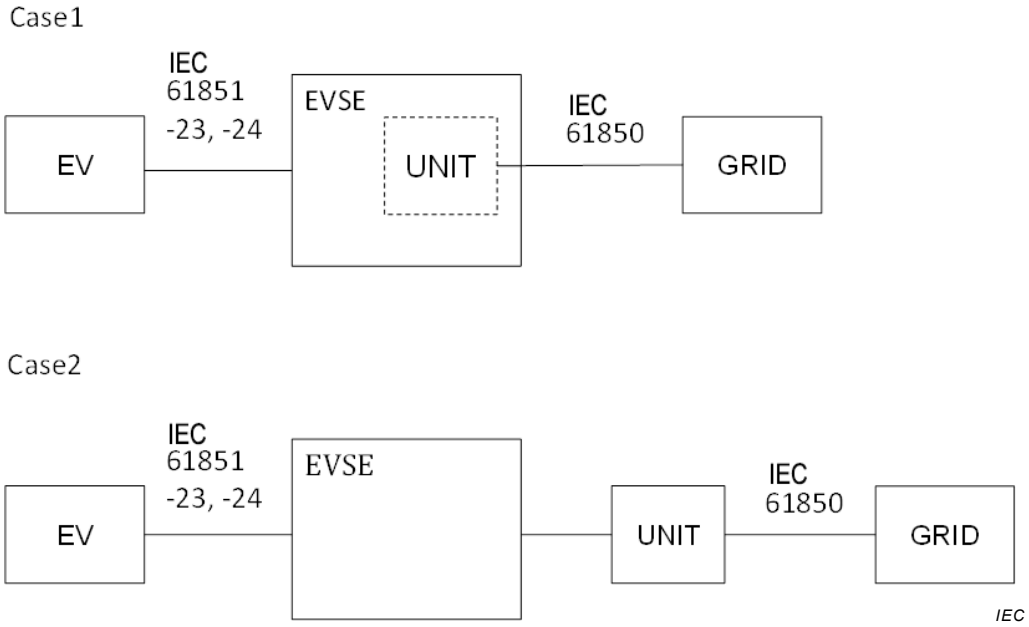

Figure 5 – Communication architecture of System A

5.3.5 Common information model for electric vehicles

The basic idea behind this technical report is to describe one information model in terms of IEC 61850 logical nodes, reflecting EVs plugged into supply equipments from the point of view of the power grid.

This technical report does not define how the exact implementation should be made. However, independent of the underlying hardware architecture as well as communication technologies / protocols behind the data exchange, the different information models should be harmonized.

From a power grid point of view, the operations of AC and DC charging an EV are very similar. Technically, the difference is in the placement of the charging equipment: *on-board* for AC charging, *off-board* for DC charging. This has an influence on the communication requirements between the EV and the charge spot which is already covered in [ISO 15118-2:2014]. The real difference is in the services provided to the connected EV in terms of charging power. Typically, dedicated off-board DC charging equipments provide higher charging power rates.

However, from the grid's point of view an EV connected to an AC or DC charging socket basically has the same need: Power is drawn from the grid connection point based upon requirements of the connected EV. In that respect it provides the same basic information relevant for power grid operations. Hence this technical report models AC and DC chargers using a very similar LN model to that shown in Figure 6.

Documents
Document Sharing Hub
Full document details: IEC TR 61850-90-8 2016