IEC TR 61869-102

Edition 1.0 2014-01

TECHNICAL REPORT

colour inside

Instrument transformers –
Part 102: Ferroresonance oscillations in substations with inductive voltage transformers

IEC TR 61869-102:2014-01(EN)

Documents
Document Sharing Hub

Full document details: IEC TR 61869-102 2014

THIS PUBLICATION IS COPYRIGHT PROTECTED

Copyright © 2014 IEC, Geneva, Switzerland

All rights reserved. Unless otherwise specified, no part of this publication may be reproduced or utilized in any form or by any means, electronic or mechanical, including photocopying and microfilm, without permission in writing from either IEC or IEC's member National Committee in the country of the requester. If you have any questions about IEC copyright or have an enquiry about obtaining additional rights to this publication, please contact the address below or your local IEC member National Committee for further information.

IEC Central Office
3, rue de Varembé
CH-1211 Geneva 20
Switzerland

Tel.: +41 22 919 02 11
Fax: +41 22 919 03 00
info@iec.ch
www.iec.ch

About the IEC
The International Electrotechnical Commission (IEC) is the leading global organization that prepares and publishes International Standards for all electrical, electronic and related technologies.

About IEC publications
The technical content of IEC publications is kept under constant review by the IEC. Please make sure that you have the latest edition, a corrigenda or an amendment might have been published.

IEC Catalogue - webstore.iec.ch/catalogue
The stand-alone application for consulting the entire bibliographical information on IEC International Standards, Technical Specifications, Technical Reports and other documents. Available for PC, Mac OS, Android Tablets and iPad.

IEC publications search - www.iec.ch/searchpub
The advanced search enables to find IEC publications by a variety of criteria (reference number, text, technical committee,…). It also gives information on projects, replaced and withdrawn publications.

IEC Just Published - webstore.iec.ch/justpublished
Stay up to date on all new IEC publications. Just Published details all new publications released. Available online and also once a month by email.

Electropedia - www.electropedia.org
The world's leading online dictionary of electronic and electrical terms containing more than 30 000 terms and definitions in English and French, with equivalent terms in 14 additional languages. Also known as the International Electrotechnical Vocabulary (IEV) online.

IEC Glossary - std.iec.ch/glossary
More than 55 000 electrotechnical terminology entries in English and French extracted from the Terms and Definitions clause of IEC publications issued since 2002. Some entries have been collected from earlier publications of IEC TC 37, 77, 86 and CISPR.

IEC Customer Service Centre - webstore.iec.ch/csc
If you wish to give us your feedback on this publication or need further assistance, please contact the Customer Service Centre: csc@iec.ch.

AVA Documents
Document Sharing Hub

Full document details: IEC TR 61869-102 2014

IEC TR 61869-102

Edition 1.0 2014-01

TECHNICAL REPORT

colour inside

Instrument transformers –
Part 102: Ferroresonance oscillations in substations with inductive voltage transformers

INTERNATIONAL
ELECTROTECHNICAL
COMMISSION

PRICE CODE XA

ICS 17.220.20

ISBN 978-2-8322-1308-7

Warning! Make sure that you obtained this publication from an authorized distributor.

® Registered trademark of the International Electrotechnical Commission

Documents
Document Sharing Hub

Full document details: IEC TR 61869-102 2014

CONTENTS

FOREWORD 5
INTRODUCTION 7
1 Scope 8
2 Normative references 8
3 Introduction to ferroresonance oscillations 8
3.1 Definition of ferroresonance 8
3.2 Excitation of steady state and non-steady state ferroresonance oscillations 10
4 Single phase and three phase oscillations 12
4.1 Single phase ferroresonance oscillations 12
4.2 The simplified circuit for the single phase ferroresonance oscillations 13
4.3 Capacitive voltage transformers 15
4.4 Three-phase ferroresonance oscillations 15
4.4.1 General 15
4.4.2 Configuration 15
4.4.3 Ferroresonance generation 16
4.4.4 Resulting waveform of ferroresonance oscillation 16
4.4.5 Typical oscillogram of three phase ferroresonance 19
5 Examples of ferroresonance configurations 20
5.1 Single-phase ferroresonance power line field in a 245 kV outdoor substation 20
5.2 Single phase ferroresonance oscillations due to line coupling 22
5.3 Three-phase ferroresonance oscillations 25
6 Inductive voltage transformer (key parts) 26
7 The circuit of the single-phase ferroresonance configuration 28
7.1 Schematic diagram 28
7.2 Magnetisation characteristic 29
7.3 Circuit losses 30
8 Necessary information for ferroresonance investigation 31
8.1 General 31
8.2 Single phase ferroresonance 31
8.3 Three phase ferroresonance 32
9 Computer simulation of ferroresonance oscillations 33
9.1 General 33
9.2 Electrical circuit and circuit elements 33
9.3 Circuit losses 33
9.4 Examples of simulation results for single phase ferroresonance oscillations 33
9.4.1 General 33
9.4.2 Case 1: Transient, decreasing ferroresonance oscillation 34
9.4.3 Case 2: Steady-state ferroresonance oscillation at network frequency 34
9.4.4 Case 3: Steady-state subharmonic ferroresonance oscillation 35
9.4.5 Case 4: Steady-state chaotic ferroresonance oscillation 36
9.5 Simulation of three phase ferroresonance 37

AVA Documents
Document Sharing Hub
Full document details: IEC TR 61869-102 2014

10 Experimental investigations, test methods and practical measurements 38
10.1 General 38
10.2 Single-phase ferroresonance oscillations 38
10.3 Three-phase ferroresonance oscillations 41
11 Avoidance and suppression of ferroresonance oscillations 42
11.1 Flow diagram 42
11.2 Existing substations 44
11.3 New projects 44
11.4 Avoidance of ferroresonance oscillations 44
11.4.1 General 44
11.4.2 Single phase ferroresonance oscillations 44
11.4.3 Three phase ferroresonance oscillations 45
11.5 Damping of ferroresonance oscillation 45
11.5.1 General 45
11.5.2 Single-phase ferroresonance oscillations 45
11.5.3 Three-phase-ferroresonance oscillations 47
Annex A (informative) Oscillations in non-linear circuits 49
A.1 Overview 49
A.2 The simplification of non-linear electrical circuits with the theorem of Thévenin 51
A.3 The differential equation for ferroresonance oscillations 51
A.4 Oscillation frequencies in ferroresonance systems 53
Bibliography 54

Figure 1 – Example of a typical magnetisation characteristic of a ferromagnetic core 9
Figure 2 – Schematic diagram of the simplest ferroresonance circuit 9
Figure 3 – Examples of measured single-phase ferroresonance oscillation with $16^2/_3$ Hz oscillation 11
Figure 4 – Schematic diagram of a de-energised outgoing feeder bay with voltage transformers as an example in which single-phase ferroresonance oscillations can occur 12
Figure 5 – Diagram of a network situation that tends toward single-phase ferroresonance oscillations, in which they can be excited and maintained over the capacitive coupling of parallel overhead power line systems 13
Figure 6 – Electrical circuits for theoretical analysis of a single-phase ferroresonance oscillation 14
Figure 7 – Insulated network as an example of a schematic diagram of a situation in which a three-phase ferroresonance oscillation can occur 15
Figure 8 – Phasor diagram to explain the oscillation of the earth potential 16
Figure 9 – Laboratory test set used by Bergmann 17
Figure 10 – Domains in the capacitance C and line voltage U where different harmonic and sub-harmonic ferroresonance oscillations are obtained for a given resistance R of 6,7 Ω in Bergmann's test set 18
Figure 11 – Domains in the capacitance C and line voltage U where second sub-harmonic ferroresonance oscillations are obtained for a variation of the resistance R in Bergmann's test set 18
Figure 12 – Domains in the capacitance C and line voltage U where different modes of second sub-harmonic ferroresonance oscillations are obtained for a given resistance R of 6,7 Ω in Bergmann's test set 19
Figure 13 – Fault recorder display of a three-phase ferroresonance oscillation 20

AVA Documents
Document Sharing Hub
Full document details: IEC TR 61869-102 2014

Figure 14 – Switching fields in the 245 kV substation in which single-phase ferroresonances occur 21
Figure 15 – Examples of oscillations of single-phase ferroresonance when switching off the circuit breaker in Figure 14 22
Figure 16 – Single-phase schematic of the network situation on the 60 kV voltage level in the area of substations 1, 2, and 3 23
Figure 17 – Tower schematic of the common stretch of overhead lines between substations 1 and 2 24
Figure 18 – Ferroresonance oscillations recorded in line no. 5 at Substation 2 24
Figure 19 – Single-line diagram of the 170-kV substation (left) and the 12-kV substation (right); where during switching operation three phase ferroresonance oscillations occurred 25
Figure 20 – Oscillograms of the three-phase voltages at inductive voltage transformer T04 (Figure 19) 26
Figure 21 – Schematic circuit of voltage transformer and the simplification for ferroresonace studies 27
Figure 22 – Circuit for the analysis of single-phase ferroresonance oscillation 29
Figure 23 – Example of a hysteresis curve of a voltage transformer core measured at 50 Hz 30
Figure 24 – Schematic diagram for three phase ferroresonance oscillation 32
Figure 25 – Transient decreasing ferroresonance oscillation with the fifth subharmonic 50/5 Hz (10 Hz) 34
Figure 26 – Steady state ferroresonance oscillation with network frequency 35
Figure 27 – Steady state ferroresonance oscillation with 10 Hz 36
Figure 28 – Steady state chaotic ferroresonance oscillation 37
Figure 29 – Example of the connection of a measuring resistor for capturing the current signal through the voltage transformer's primary winding at terminal N (see connection diagram in Figure 30) 39
Figure 30 – Current measurement through voltage transformer's primary winding and the voltage at the secondary winding 40
Figure 31 – Measurement of a single-phase ferroresonance oscillation 41
Figure 32 – Measurement of three-phase ferroresonance oscillations with an oscilloscope 42
Figure 33 – Flow diagram for analysis and avoidance of ferroresonance oscillations 43
Figure 34 – Electrical circuit with damping device (red circles) connected to the secondary winding of the voltage transformer 45
Figure 35 – Example of successful damping of single-phase ferroresonance oscillations of $16^2/_3$ Hz 46
Figure 36 – Damping of the ferroresonance oscillation in the open delta connection of the voltage transformers in the feeder bay 47
Figure 37 – Damping of ferroresonance oscillations with voltage transformer in the star point of the power transformer 48
Figure A.1 – A simplified electrical circuit for the analysis of ferroresonance oscillation 49
Figure A.2 – Diagram for the derivation of non-linear differential equation of second order 52
Figure A.3 – A non-linear oscillation system 53

Table 1 – Types of excitation and possible developments of ferroresonance oscillations 10
Table 2 – Parameters 13

AVA Documents
Document Sharing Hub
Full document details: IEC TR 61869-102 2014

INTERNATIONAL ELECTROTECHNICAL COMMISSION

INSTRUMENT TRANSFORMERS – PART 102: FERRORESONANCE OSCILLATIONS IN SUBSTATIONS WITH INDUCTIVE VOLTAGE TRANSFORMERS

FOREWORD

1) The International Electrotechnical Commission (IEC) is a worldwide organization for standardization comprising all national electrotechnical committees (IEC National Committees). The object of IEC is to promote international co-operation on all questions concerning standardization in the electrical and electronic fields. To this end and in addition to other activities, IEC publishes International Standards, Technical Specifications, Technical Reports, Publicly Available Specifications (PAS) and Guides (hereafter referred to as "IEC Publication(s)"). Their preparation is entrusted to technical committees; any IEC National Committee interested in the subject dealt with may participate in this preparatory work. International, governmental and non-governmental organizations liaising with the IEC also participate in this preparation. IEC collaborates closely with the International Organization for Standardization (ISO) in accordance with conditions determined by agreement between the two organizations.
2) The formal decisions or agreements of IEC on technical matters express, as nearly as possible, an international consensus of opinion on the relevant subjects since each technical committee has representation from all interested IEC National Committees.
3) IEC Publications have the form of recommendations for international use and are accepted by IEC National Committees in that sense. While all reasonable efforts are made to ensure that the technical content of IEC Publications is accurate, IEC cannot be held responsible for the way in which they are used or for any misinterpretation by any end user.
4) In order to promote international uniformity, IEC National Committees undertake to apply IEC Publications transparently to the maximum extent possible in their national and regional publications. Any divergence between any IEC Publication and the corresponding national or regional publication shall be clearly indicated in the latter.
5) IEC itself does not provide any attestation of conformity. Independent certification bodies provide conformity assessment services and, in some areas, access to IEC marks of conformity. IEC is not responsible for any services carried out by independent certification bodies.
6) All users should ensure that they have the latest edition of this publication.
7) No liability shall attach to IEC or its directors, employees, servants or agents including individual experts and members of its technical committees and IEC National Committees for any personal injury, property damage or other damage of any nature whatsoever, whether direct or indirect, or for costs (including legal fees) and expenses arising out of the publication, use of, or reliance upon, this IEC Publication or any other IEC Publications.
8) Attention is drawn to the Normative references cited in this publication. Use of the referenced publications is indispensable for the correct application of this publication.
9) Attention is drawn to the possibility that some of the elements of this IEC Publication may be the subject of patent rights. IEC shall not be held responsible for identifying any or all such patent rights.

The main task of IEC technical committees is to prepare International Standards. However, a technical committee may propose the publication of a technical report when it has collected data of a different kind from that which is normally published as an International Standard, for example "state of the art".

IEC 61869-102, which is a technical report, has been prepared by IEC technical committee 38: Instrument transformers.

The text of this technical report is based on the following documents:

Enquiry draft	Report on voting
38/440A/DTR	38/445/RVC

Documents
Document Sharing Hub

Full document details: IEC TR 61869-102 2014

Full information on the voting for the approval of this technical report can be found in the report on voting indicated in the above table.

This publication has been drafted in accordance with the ISO/IEC Directives, Part 2.

A list of all the parts in the IEC 61869 series, published under the general title *Instrument transformers*, can be found on the IEC website.

The committee has decided that the contents of this publication will remain unchanged until the stability date indicated on the IEC web site under "http://webstore.iec.ch" in the data related to the specific publication. At this date, the publication will be

- reconfirmed,
- withdrawn,
- replaced by a revised edition, or
- amended.

A bilingual version of this publication may be issued at a later date.

IMPORTANT – The 'colour inside' logo on the cover page of this publication indicates that it contains colours which are considered to be useful for the correct understanding of its contents. Users should therefore print this document using a colour printer.

Documents
Document Sharing Hub

Full document details: IEC TR 61869-102 2014

INTRODUCTION

During the last twenty years ferroresonance oscillations in substations with inductive voltage transformers according to IEC 61869-3 or with combined transformers according to IEC 61869-4 were discussed in the international Cigré working groups and in IEEE committees in the US.

The results were published in Cigré [1] technical report or IEEE [2] publications.

The reasons for these publications were the more frequent occurrence of ferroresonance oscillations in substations. As a consequence of the price pressure on the operating authorities and the component manufacturers such as instrument transformers, power transformers and grading capacitors for high-performance circuit breakers have led to an increasingly higher exploitation of the system and components.

This trend results in:

a) the shift from normal rated voltage U_{pr} in the direction of the maximum permitted highest voltage for equipment U_m (IEC 60071-1 [3]);

b) increasing the flux density $\vec{\hat{B}}$ by reducing the cross-section of the core of the inductive voltage transformer;

c) the reduction of the substation capacitance by using new components (e.g. MV and HV instrument transformers) leads to an increase of the excitation-voltage for the non-linear circuits;

d) reduction of the actual burden in the substation by using digital meters and relays with burden of approximately 1 VA, while still specifying the high nominal burden (50 VA to 400 VA) for the inductive voltage transformer. However, even these higher burdens are often not sufficient to prevent ferroresonance oscillations.

Documents
Document Sharing Hub

Full document details: IEC TR 61869-102 2014

PART 102: INSTRUMENT TRANSFORMERS – FERRORESONANCE OSCILLATIONS IN SUBSTATIONS WITH INDUCTIVE VOLTAGE TRANSFORMERS

1 Scope

This part of IEC 61869 provides technical information for understanding the undesirable phenomenon of ferroresonance oscillations in medium voltage and high voltage networks in connection with inductive voltage transformers. Ferroresonance can cause considerable damage to voltage transformers and other equipment. Ferroresonance oscillations may also occur with other non-linear inductive components.

2 Normative references

The following documents, in whole or in part, are normatively referenced in this document and are indispensable for its application. For dated references, only the edition cited applies. For undated references, the latest edition of the referenced document (including any amendments) applies.

IEC 61869-3, *Instrument Transformers – Part 3: Specific requirements for inductive voltage transformers*

IEC 61869-5, *Instrument Transformers – Part 5: Specific requirements for capacitive voltage transformers*

3 Introduction to ferroresonance oscillations

3.1 Definition of ferroresonance

Ferroresonance refers to non-linear oscillations that can occur in switching facilities where inductive components with a ferromagnetic core, together with capacitances and an AC voltage source comprise a system capable of oscillation. Numerous reports and publications on occurrences of ferroresonance have already been documented in the first half of the last century. A classic example of these occurrences comes from R. Rüdenberg [4]. His research was only done for fundamental frequencies; others carried out research on harmonics and subharmonics. A modern, didactically prepared introduction to ferroresonance problems can be found in K. Heuck and K.-D. Dettmann [5]. Much-cited basic examinations of the wide variety of ferroresonance oscillations were described by Bergmann [6, 7]. A review article on the problem was presented at the Cigré Conference in 1974 [1].

All ferromagnetic materials only allow themselves to be magnetised to a certain saturation flux density $\vec{B}_S$. If inductive voltage transformers are magnetised over their saturation flux density, the relationship between the magnetic field strength $\vec{H}_{eff}$ and the magnetic flux density $\vec{\hat{B}}$ are given by a strong non-linear characteristic (Figure 1). This means that the main inductance of an inductive voltage transformer in excess of the saturation flux density will collapse to a small fraction. This occurrence of core saturation plays an important role in the phenomena of ferroresonance.

Ferroresonance oscillations will only occur in configurations in high and medium voltage substations or in sections of networks. Single phase oscillations will occur in systems in which the high voltage winding of the inductive voltage transformer is connected in series with a

AVA Documents Document Sharing Hub

Full document details: IEC TR 61869-102 2014

capacitance to the AC voltage source (Figure 2). Three phase oscillations occur in systems in which the low voltage side of the power transformer is isolated from earth.

The above gives a basic picture about ferroresonance. In practice, ferroresonance can occur in many complicated network situations.

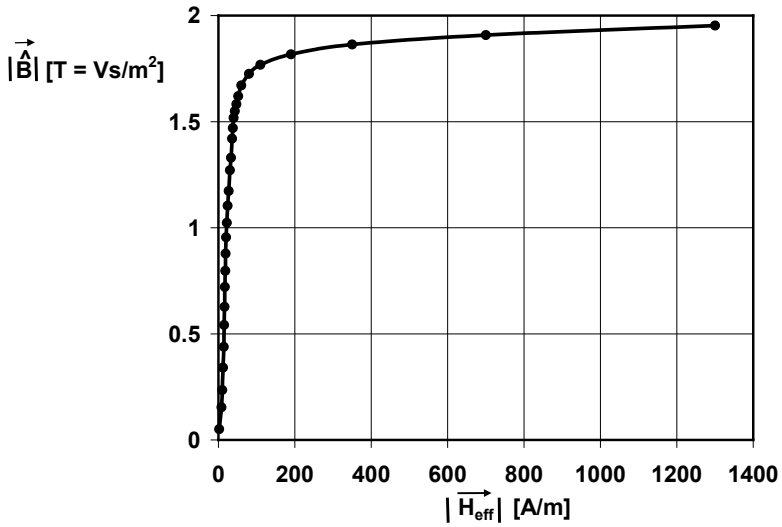

IEC 3021/13

Key

$|\hat{\vec{B}}|$ Peak value of flux density in the iron core

$|\vec{H}_{\text{eff}}|$ Effective value of magnetic field strength in the iron core

The curve is valid for cold-rolled Si-iron (standard material).

Reproduced from [8], with the permission of ewz/CH.

Figure 1 – Example of a typical magnetisation characteristic of a ferromagnetic core

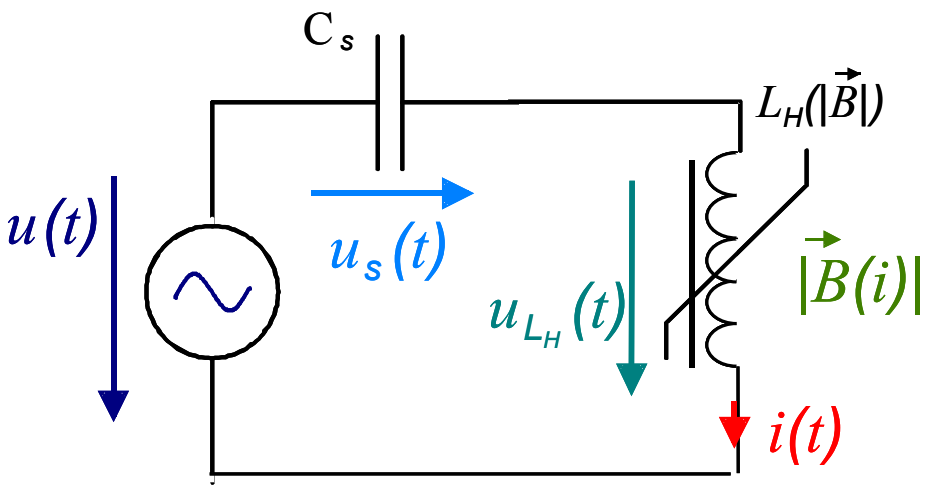

IEC 3022/13

Key

$u(t)$ AC voltage source
$u_S(t)$ Voltage at series capacitance
$u_{LH}(t)$ Voltage at the main inductance of the voltage transformer (VT)
$i(t)$ Circuit current
C_S Series capacitance
$|\vec{B}|(i(t))$ Flux density as function of the current i(t)
$L_H(|\vec{B}|)$ Non-linear main inductance of voltage transformer

Reproduced from [8], with the permission of ewz/CH

Figure 2 – Schematic diagram of the simplest ferroresonance circuit

AVA Documents
Document Sharing Hub
Full document details: IEC TR 61869-102 2014

In practice, parts of networks endangered by ferroresonance are usually comprised by other high voltage equipment, which also play a role in determining the conditions for the occurrence of ferroresonance oscillations.

Due to the small inductance of the saturated voltage transformer at maximum saturation of the core, the very large excitation current leads to a quick reverse of the polarity of the charge of the series capacitances.

Oscillations resulting from excitation of a resonance circuit in substation sections can also occur without saturation of voltage transformers. Such linear oscillations usually occur at operating frequency and have a sinusoidal wave form.

From the theory of non-linear oscillations and modern stability theory [9] for non-linear systems follows that the occurrence of steady state oscillations requires a system comprised of an equivalent capacitor, a non-linear inductance, and an AC voltage source for covering system losses. The non-linear element for such a system is the main inductance of the inductive voltage transformer. When the voltage increases non-linear oscillations are generated on account of the saturation characteristics of the magnetic flux density according to the time depending function $\vec{B}(t) = f(\vec{H}(t))$. This is a non-linear, time-invariant relationship (hysteresis curve of the magnetic material used), indicated by the limitation characteristic [10].

The difficulty in determining whether any steady state non-linear oscillations are occurring is due to the fact that only estimated values are available for the earth capacity C_e and for the configuration of the capacitors and especially for the losses occurring in the substation on account of the leakage current from the high-voltage insulators (porcelain or composite) in air insulated substations.

The economic aspects of ferroresonance have also been discussed, and it shall be summarized that already in the planning stage of substations using inductive voltage transformers, there should be an investigation about the possibility of non-linear oscillations. This requires cooperation between switchgear manufacturers and instrument transformer manufacturers, as well as system operators [9]. This process describes the most economical solution. Ferroresonance investigations have also proven their worth in model substations. It is more costly to eliminate ferroresonance at existing substations if cases of non-linear oscillations (ferroresonance) arise as a result of component replacement such as grading capacitors of circuit breakers, coupling capacitors or inductive voltage transformers.

3.2 Excitation of steady state and non-steady state ferroresonance oscillations

A ferroresonance oscillation can be gradually ramped up by a small disturbance ("soft excitation"). Upon soft excitation the oscillations will begin at low initial amplitude.

However, ferroresonance is in most cases caused or "triggered" as a result of a switching transient through which the core becomes saturated ("hard excitation").

Table 1 (reproduced from [8]) gives an overview of the two kinds of excitation and the possible developments of ferroresonance oscillations.

Table 1 – Types of excitation and possible developments of ferroresonance oscillations

Soft excitation Slow increasing oscillation when ferroresonance conditions are met	1a: Steady state ferroresonsnce oscillations 1b: Non-steady state increasing ferroresonance oscillations
Hard excitation e.g. through sudden saturation of a transformer core on account of a switching operation or through an intermittent earth fault, etc.	2a: Steady state ferroresonance oscillations 2b: Non-steady state increasing ferroresonance oscillations 2c: Non-steady stae decreasing ferroresonance oscillations

Documents
Document Sharing Hub
Full document details: IEC TR 61869-102 2014

Ferroresonance oscillations can become steady state or non-steady state (as shown in Figure 3) with increasing or decreasing amplitude. Increasing ferroresonance oscillations can lead to thermal dielectric destruction of the inductive voltage transformer or to a flashover in the substation.

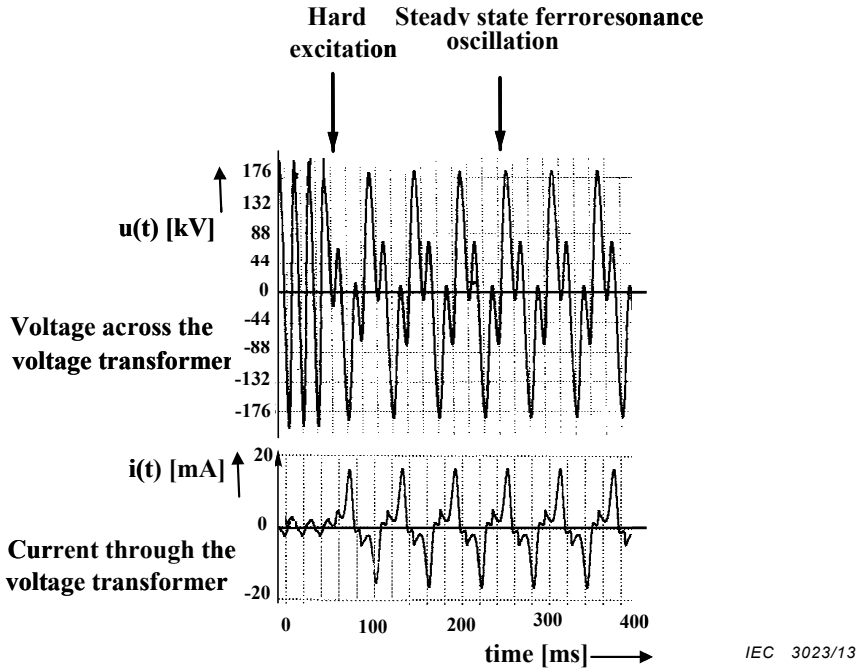

a) Single-phase steady state ferroresonance oscillations, type 2a according to Table 1

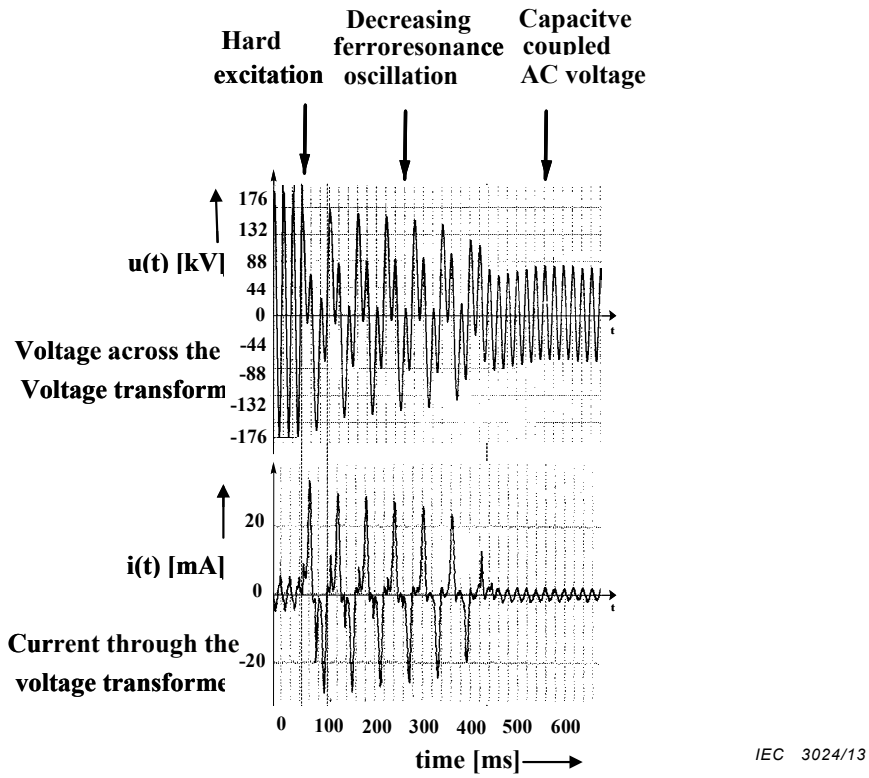

b) Single-phase decreasing ferroresonance oscillations, type 2c according to Table 1

Reproduced from [8], with the permission of Amprion (formerly RWE).

Figure 3 – Examples of measured single-phase ferroresonance oscillation with $16^2/_3$ Hz oscillation

AVA Documents
Document Sharing Hub
Full document details: IEC TR 61869-102 2014

Decreasing ferroresonance oscillations will not cause damages to voltage transformers. Steady state oscillations will increase the current in the primary transformer windings and ultimately damage transformers through overheating. The damage caused by increasing non-steady state oscillations is obvious.

Current and voltage waveforms of the primary winding are shown in Figure 3a) for steady state ferroresonance resulting from a hard excitation caused by a switching operation, and in Figure 3b) for non-steady state, decreasing ferroresonance.

The occurrence of decreasing ferroresonance oscillations as shown in Figure 3b) is defined by statistic events: for example by the instance of switching.

4 Single phase and three phase oscillations

4.1 Single phase ferroresonance oscillations

Individual phases of a de-energised, non-earthed equipment section containing one or more inductive voltage transformers will be excited to oscillations independent of one another by the network voltage over a coupling capacity C_C. Single-phase ferroresonances can occur in all systems independently of the star point earthing.

An example of a switching configuration in which a single-phase ferroresonance can occur is shown in Figure 4. It illustrates one phase of a disconnected outgoing feeder bay at an air insulated substation. The coupling to the voltage network in this case happens over the grading capacitors of the open circuit breaker.

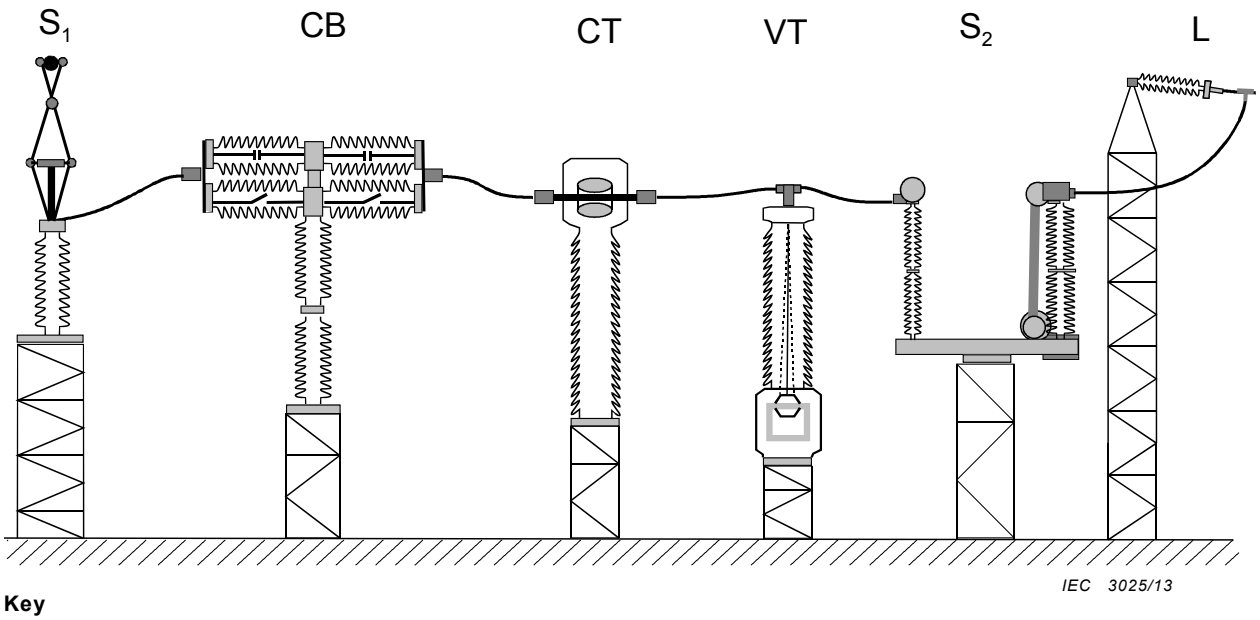

Key
S_1 Substation disconnector, closed
CB Circuit breaker, open
CT Current transformer
VT Voltage transformer
S_2 Outgoing line disconnector opened
L Outgoing power lines, earthed

Reproduced from [8], with the permission of ewz/CH.

Figure 4 – Schematic diagram of a de-energised outgoing feeder bay with voltage transformers as an example in which single-phase ferroresonance oscillations can occur

Documents
Document Sharing Hub
Full document details: IEC TR 61869-102 2014

An alternative configuration that tends toward ferroresonance oscillations is that of a de-energised overhead power line system L_{MV} if it is on the same supporting tower as an activated system of a higher voltage level L_{HV}. This situation is shown in Figure 5. The phases of the de-energised system remain unearthed and they are connected to voltage transformers on one or both ends. In some circumstances this can lead to an excitation causing ferroresonance oscillations via the coupling capacity C_C between the conductor wires of the energised and de-energised overhead power lines. In this case the individual phases will oscillate independently from one another.

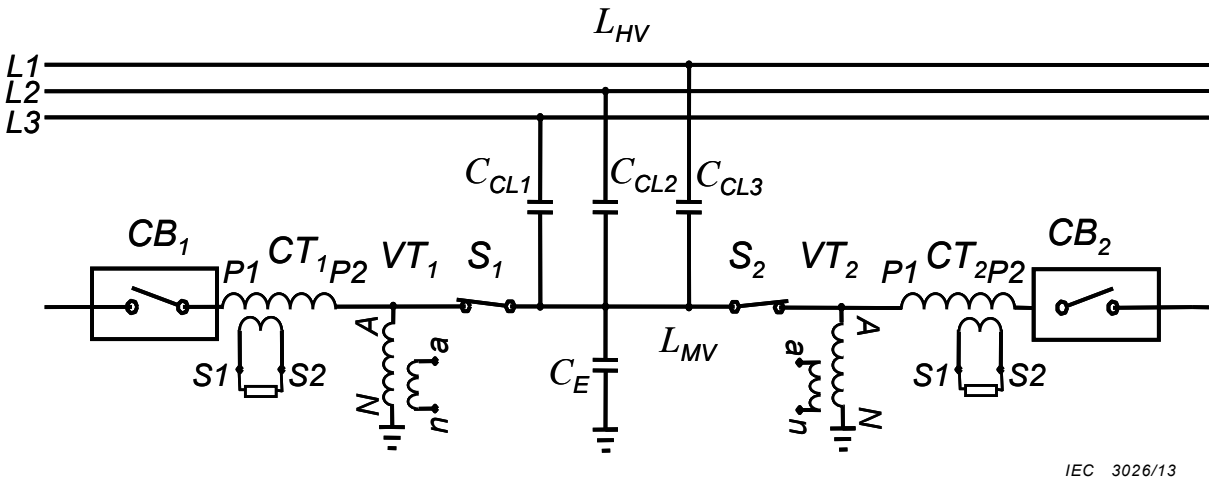

Key

L_{MV}	Affected phase of the overhead power lines
L_{HV}	Overhead power line system of a higher voltage level
C_{CL1}, C_{CL2}, C_{CL3}	Coupling capacitances between the phase under observation and the phases of the parallel system of a higher voltage level
C_e	Earth capacity
CT_1, CT_2	Current transformers
VT_1, VT_2	Voltage transformers
CB_1, CB_2	Circuit breaker, open
S_1, S_2	Disconnector switch, closed

Reproduced from [8], with the permission of ewz/CH.

Figure 5 – Diagram of a network situation that tends toward single-phase ferroresonance oscillations, in which they can be excited and maintained over the capacitive coupling of parallel overhead power line systems

4.2 The simplified circuit for the single phase ferroresonance oscillations

The previously treated considerations and schematics will not be sufficient for a theoretical analysis of ferroresonance oscillations. In order to predict the occurrence of ferroresonance oscillations a more detailed definition and description of the electrical components and their characteristics is necessary. Figure 6 illustrates the general schematic circuits for the analysis of single-phase ferroresonance oscillation. Figures 6a) and 6b) show two different ways of excitations. A detailed treatment of the analysis and simulation methods with examples is found in Clause 9.

Documents
Document Sharing Hub
Full document details: IEC TR 61869-102 2014

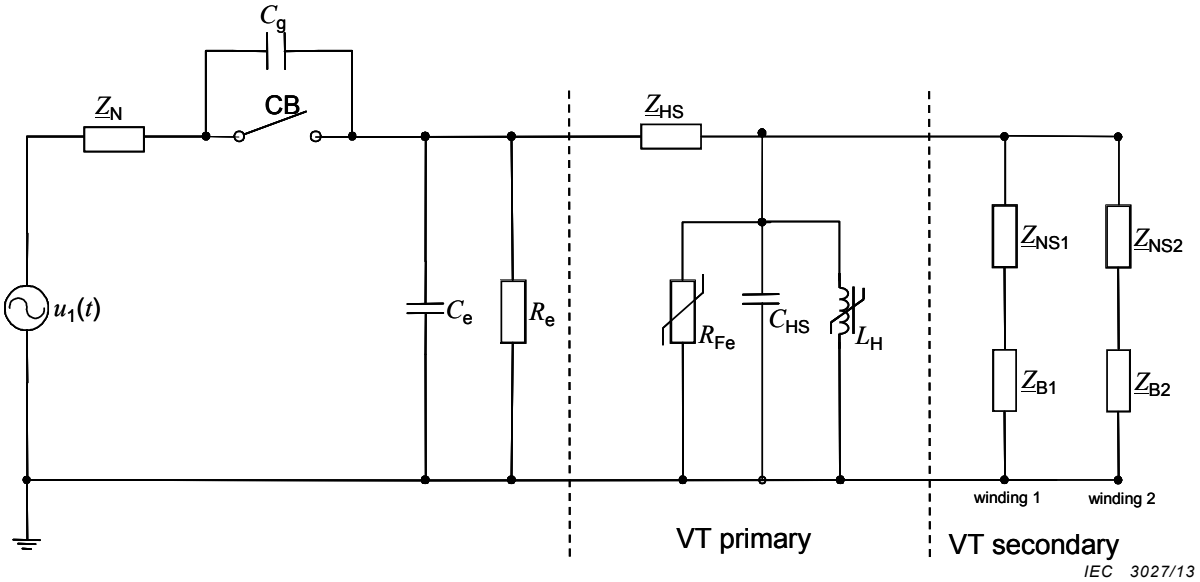

a) Excitation of ferroresonance oscillation through a grading capacitor

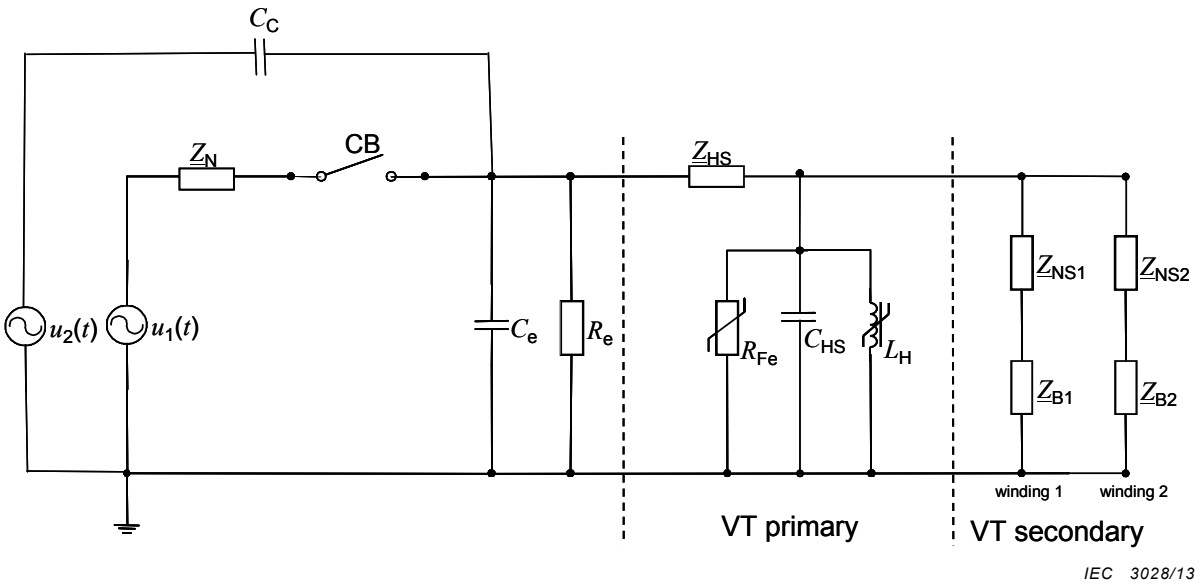

b) Ferroresonance oscillation caused by a parallel system

Key

C_e	Total earth capacitance
C_{HS}	Capacitance of the HV-winding of voltage transformer
C_C	Coupling capacitance to a parallel system of a higher voltage level
C_g	Capacitance of the grading capacitor of circuit breaker CB
R_e	External resistance phase-earth e.g. through currents in dirty surfaces, corona currents, and currents of metal oxide arrestors
R_{Fe}	Non-linear resistance representing the iron losses of the inductive VT
L_H	Non-linear main inductance of the HV-winding of the inductive VT
$u_1(t)$	Phase to earth voltage before the circuit breaker in the system
$u_2(t)$	Voltage of a neighbouring system of a higher voltage level with which there is a capacitive coupling
VT	Voltage transformer
$\underline{Z}_{B1}$	Impedance of the burden of secondary winding 1 (load impedance and inductance)
$\underline{Z}_{B2}$	Impedance of the burden of secondary winding 2 (load impedance and inductance)
$\underline{Z}_{HS}$	Impedance of the HV winding (resistance and stray inductance)
$\underline{Z}_N$	Network impedance
$\underline{Z}_{NS1}$	Impedance secondary winding 1 (resistance and stray inductance)
$\underline{Z}_{NS2}$	Impedance secondary winding 2 (resistance and stray inductance)

Reproduced from [8], with the permission of ewz/CH.

Figure 6 – Electrical circuits for theoretical analysis of a single-phase ferroresonance oscillation

AVA Documents
Document Sharing Hub
Full document details: IEC TR 61869-102 2014

4.3 Capacitive voltage transformers

Conventional capacitive voltage transformers have an inductive intermediate transformer and a compensation coil. Together with the primary and secondary capacitor they contain all the components required to form a ferroresonance circuit. Therefore capacitive voltage transformers can generate ferroresonance oscillations without additional series capacity. Their design shall be arranged to exclude the possibility of a steady state ferroresonance oscillation under all possible operational conditions (IEC 61869-5).

The most commonly used methods for damping the ferroresonance oscillations in capacitive voltage transformers are LC-resonant circuits with low losses at 50/60 Hz, rated for $16^2/_3$/20 Hz, 10/12 Hz and $7^1/_7$/$8^4/_7$ Hz.

4.4 Three-phase ferroresonance oscillations

4.4.1 General

Three phase ferroresonance oscillations will occur in substations or network sections with single-phase voltage transformers where the star point of the secondary side of the power transformer is not solidly earthed. All three phases are involved in the ferroresonance oscillation.

4.4.2 Configuration

Figure 7 illustrates a configuration vulnerable to ferroresonance as it occurs in networks with a non-solidly earthed star point, if the voltage transformers are connected line to earth.

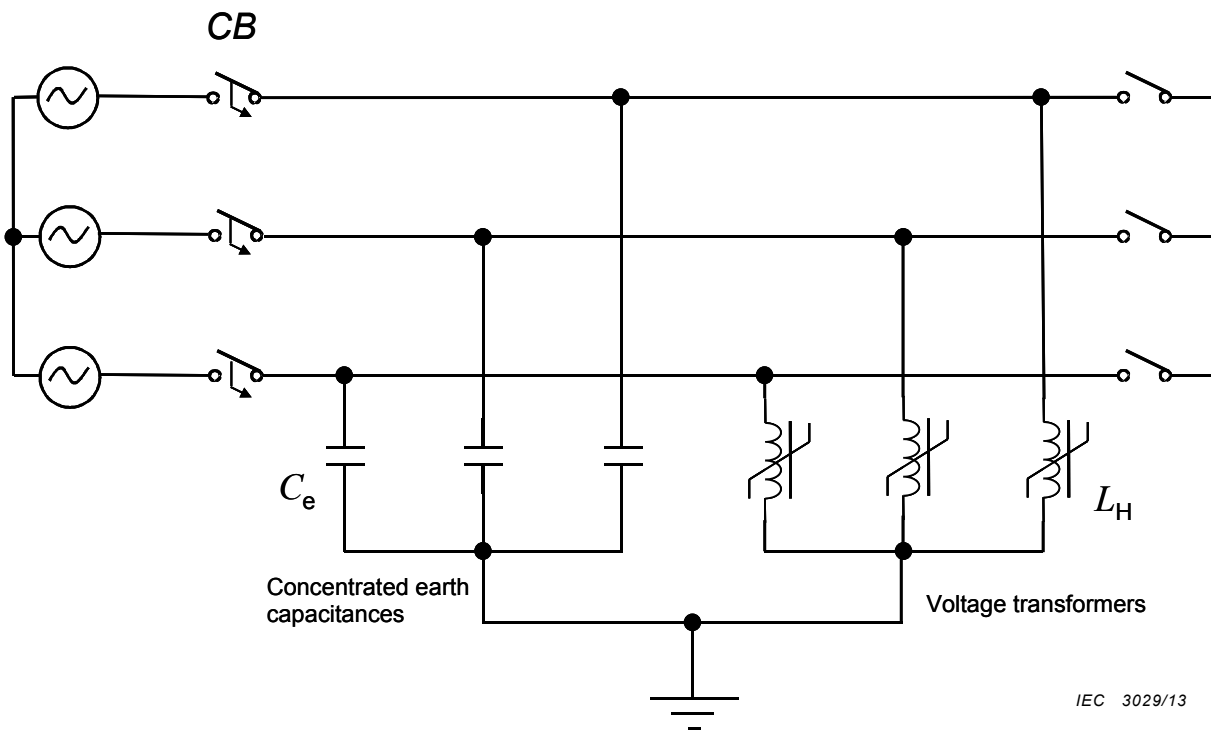

Reproduced from [8], with the permission of ewz/CH.

Figure 7 – Insulated network as an example of a schematic diagram of a situation in which a three-phase ferroresonance oscillation can occur

If voltage transformers are connected to the low voltage side of a power transformer, which is energised on the high voltage side, saturation of one voltage transformer can lead to over voltages on the other phases, if the star point of the secondary side of the power transformer

AVA Documents Document Sharing Hub
Full document details: IEC TR 61869-102 2014

is not solidly earthed. The star point will thus shift and ultimately produce oscillations, driving all three voltage transformers to alternately become saturated.

This movement of the star point can also occur as the result of an extinguishing earth fault.

4.4.3 Ferroresonance generation

As a consequence of the saturation of one voltage transformer, the earth capacitances of the other two voltage transformers are in series to this transformer, seen from the network voltage source and thus form a system that is temporarily capable of oscillating. The aforementioned earth capacitances of the other phases can more or less quickly change their polarity over the saturated inductance, leading in turn to the saturation of one of the transformers of the other phases.

The movement of the star point from phase to phase can be compared to a reeling motion (see phasor diagram in Figure 8).

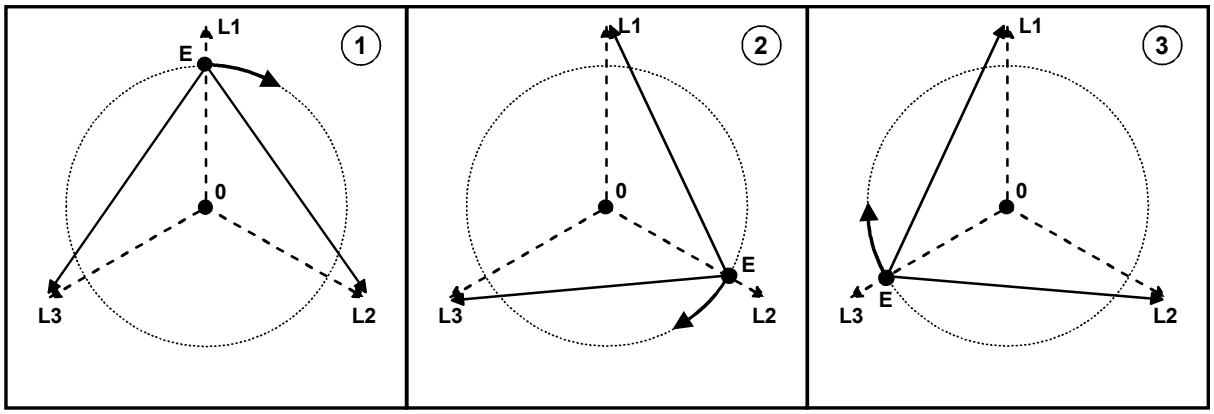

Reproduced from [8], with the permission of ewz/CH.

Figure 8 – Phasor diagram to explain the oscillation of the earth potential

The ferroresonance progression is significantly more complex in this case, since the fluctuating oscillation energy is continually shifting between the three phases. An example for three phase ferroresonance is given in 5.3.

4.4.4 Resulting waveform of ferroresonance oscillation

Contrary to the single-phase ferroresonance case, where one harmonic or sub-harmonic can be easily distinguished in the resulting voltage oscillograms, the three phase ferroresonance oscillation, which can be clearly seen in an open delta winding, is mostly composed of one basic oscillation near the system frequency and additionally of one further sub-harmonic, which can be observed as oscillations ranging from less than 1 Hz up to 7 Hz, which can be described as beats.

These beats will occur, if the earth capacitance of the star point is so large, that the saturation of one single voltage transformer is not enough to create the required current to completely reverse the polarity of the earth capacitance.

Some basic research into this effect has been done by Bergmann [6] in his 1966 dissertation. The result of these investigations was the information, which different modes are in principle possible for three-phase ferroresonance, even if later tests in the field showed that not all modes will occur in praxis.

Instead of the complete circuit as shown in Figure 7, Bergmann used a laboratory test set, which was composed of (see Figure 9):

Documents
Document Sharing Hub
Full document details: IEC TR 61869-102 2014