IEC/TR 62544

Edition 1.0 2011-08

TECHNICAL REPORT

High-voltage direct current (HVDC) systems – Application of active filters

IEC/TR 62544:2011(E)

Documents
Document Sharing Hub

Full document details: IEC TR 62544 2011

THIS PUBLICATION IS COPYRIGHT PROTECTED

Copyright © 2011 IEC, Geneva, Switzerland

All rights reserved. Unless otherwise specified, no part of this publication may be reproduced or utilized in any form or by any means, electronic or mechanical, including photocopying and microfilm, without permission in writing from either IEC or IEC's member National Committee in the country of the requester.
If you have any questions about IEC copyright or have an enquiry about obtaining additional rights to this publication, please contact the address below or your local IEC member National Committee for further information.

Droits de reproduction réservés. Sauf indication contraire, aucune partie de cette publication ne peut être reproduite ni utilisée sous quelque forme que ce soit et par aucun procédé, électronique ou mécanique, y compris la photocopie et les microfilms, sans l'accord écrit de la CEI ou du Comité national de la CEI du pays du demandeur.
Si vous avez des questions sur le copyright de la CEI ou si vous désirez obtenir des droits supplémentaires sur cette publication, utilisez les coordonnées ci-après ou contactez le Comité national de la CEI de votre pays de résidence.

IEC Central Office
3, rue de Varembé
CH-1211 Geneva 20
Switzerland
Email: inmail@iec.ch
Web: www.iec.ch

About IEC publications

The technical content of IEC publications is kept under constant review by the IEC. Please make sure that you have the latest edition, a corrigenda or an amendment might have been published.

- Catalogue of IEC publications: www.iec.ch/searchpub
The IEC on-line Catalogue enables you to search by a variety of criteria (reference number, text, technical committee,…). It also gives information on projects, withdrawn and replaced publications.

- IEC Just Published: www.iec.ch/online_news/justpub
Stay up to date on all new IEC publications. Just Published details twice a month all new publications released. Available on-line and also by email.

- Electropedia: www.electropedia.org
The world's leading online dictionary of electronic and electrical terms containing more than 20 000 terms and definitions in English and French, with equivalent terms in additional languages. Also known as the International Electrotechnical Vocabulary online.

- Customer Service Centre: www.iec.ch/webstore/custserv
If you wish to give us your feedback on this publication or need further assistance, please visit the Customer Service Centre FAQ or contact us:

Email: csc@iec.ch
Tel.: +41 22 919 02 11
Fax: +41 22 919 03 00

Documents
Document Sharing Hub

Full document details: IEC TR 62544 2011

IEC/TR 62544

Edition 1.0 2011-08

TECHNICAL REPORT

High-voltage direct current (HVDC) systems – Application of active filters

INTERNATIONAL
ELECTROTECHNICAL
COMMISSION

PRICE CODE X

ICS 29.240.99

ISBN 978-2-88912-627-9

® Registered trademark of the International Electrotechnical Commission

Documents
Document Sharing Hub

Full document details: IEC TR 62544 2011

CONTENTS

FOREWORD 5
1 Scope 7
2 Normative references 7
3 Terms and definitions 7
3.1 Active and passive filters 8
3.2 Active filter topologies 8
shunt active filter 8
3.3 Power semiconductor terms 9
3.4 Converter topologies 9
4 Active filters in HVDC applications 9
4.1 General 9
4.2 Semiconductor devices available for active filters 11
5 Active d.c. filters 11
5.1 Harmonic disturbances on the d.c. side 11
5.2 Description of active d.c. filters 12
5.2.1 General 12
5.2.2 Types of converters available 12
5.2.3 Connections of the active d.c. filter 13
5.2.4 Characteristics of installed active d.c. filters 15
5.3 Main components in an d.c. active filter 16
5.3.1 General 16
5.3.2 Passive part 16
5.3.3 Current transducer 18
5.3.4 Control system 18
5.3.5 Amplifier 19
5.3.6 Transformer 19
5.3.7 Protection circuit and arrester 19
5.3.8 Bypass switch and disconnectors 19
5.4 Active d.c. filter control 19
5.4.1 General 19
5.4.2 Active d.c. filter control methods 20
5.5 Example – Performance of the Skagerrak 3 HVDC Intertie active d.c. filter 23
5.6 Conclusions on active d.c. filters 24
6 Active a.c. filters in HVDC applications 25
6.1 General 25
6.2 Harmonic disturbances on the a.c. side of a HVDC system 25
6.3 Passive filters 26
6.3.1 Conventional passive filters 26
6.3.2 Continuously tuned passive filters 26
6.4 Reasons for using active filters in HVDC systems 27
6.5 Operation principles of active filters 28
6.5.1 Shunt connected active filter 28
6.5.2 Series connected active filter 29
6.6 Parallel and series configuration 29
6.6.1 General 29
6.6.2 Hybrid filter schemes 29
6.7 Converter configurations 30

AVA Documents
Document Sharing Hub
Full document details: IEC TR 62544 2011

6.7.1 Converters ... 30
6.8 Active a.c. filter configurations ... 32
6.8.1 Active a.c. filters for low voltage application ... 32
6.8.2 Active a.c. filters for medium voltage application ... 33
6.8.3 Active a.c. filters for HVDC applications ... 33
6.9 Series connected active filters ... 34
6.10 Control system ... 34
6.10.1 General ... 34
6.10.2 Description of a generic active power filter controller ... 35
6.10.3 Calculation of reference current ... 36
6.10.4 Synchronous reference frame (SRF) ... 37
6.10.5 Other control approaches ... 37
6.10.6 HVDC a.c. active filter control approach ... 38
6.11 Existing active a.c. filter applications ... 38
6.11.1 Low and medium voltage ... 38
6.11.2 High voltage applications ... 38
6.12 Overview on filter solutions for HVDC systems ... 39
6.12.1 Solution with conventional passive filters ... 39
6.12.2 Solution with continuously tuned passive filters ... 40
6.12.3 Solution with active filters ... 40
6.12.4 Solution with continuously tuned passive filters and active filters ... 41
6.12.5 Study cases with the CIGRÉ HVDC model ... 41
6.13 ACfilters for HVDC installations using VSC ... 43
6.14 Conclusions on active a.c. filters ... 43
Bibliography ... 45

Figure 1 – Shunt connection ... 8
Figure 2 – Series connection ... 8
Figure 3 – Conceptual diagram of allowable interference level and d.c. filter cost ... 10
Figure 4 – Simple current source converter ... 13
Figure 5 – Simple voltage sourced converter ... 13
Figure 6 – Possible connections of active d.c. filters ... 14
Figure 7 – Filter components in the active filter ... 17
Figure 8 – Impedance characteristics of different passive filters ... 17
Figure 9 – Basic control loop of an active d.c. filter ... 21
Figure 10 – Measured transfer function of external system, Baltic Cable HVDC link ... 22
Figure 11 – Feedforward control for the active d.c. filter ... 22
Figure 12 – Measured line current spectra, pole 3 operated as monopole ... 24
Figure 13 – Continuously tuned filter ... 26
Figure 14 – Example of current waves ... 28
Figure 15 – Series and parallel connection ... 29
Figure 16 – Hybrid configuration ... 30
Figure 17 – Three phase current-source converter ... 31
Figure 18 – Three phase 2 level voltage-sourced converter (three-wire type) ... 31
Figure 19 – Three phase 3 level voltage-sourced converter (three-wire type) ... 32
Figure 20 – Single-phase voltage sourced converter ... 32

AVA Documents
Document Sharing Hub
Full document details: IEC TR 62544 2011

Figure 21 – Active filter connected to the HV system through a single-tuned passive filter 33
Figure 22 – Active filter connected to the HV system through a double-tuned passive filter 34
Figure 23 – Using an LC circuit to divert the fundamental current component 34
Figure 24 – Per-phase schematic diagram of active filter and controller 35
Figure 25 – Block diagram of IRPT 36
Figure 26 – Block diagram of SRF 38
Figure 27 – Plots from site measurements 39
Figure 28 – Filter configuration and a.c. system harmonic impedance data 42

Table 1 – The psophometric weighting factor at selected frequencies 12
Table 2 – Voltage to be supplied by the active part with different selections of passive parts 18
Table 3 – Major harmonic line currents, pole 3 operated as monopole 24
Table 4 – Preferred topologies for common LV and MV applications 30
Table 5 – Performance Requirements 41
Table 6 – Parameters of filters at a.c. substation A (375 kV) 42
Table 7 – Parameters of filters at a.c. substation B (230 kV) 43
Table 8 – Performance results of filters 43

Documents
Document Sharing Hub

Full document details: IEC TR 62544 2011

INTERNATIONAL ELECTROTECHNICAL COMMISSION

HIGH-VOLTAGE DIRECT CURRENT (HVDC) SYSTEMS – APPLICATION OF ACTIVE FILTERS

FOREWORD

1) The International Electrotechnical Commission (IEC) is a worldwide organization for standardization comprising all national electrotechnical committees (IEC National Committees). The object of IEC is to promote international co-operation on all questions concerning standardization in the electrical and electronic fields. To this end and in addition to other activities, IEC publishes International Standards, Technical Specifications, Technical Reports, Publicly Available Specifications (PAS) and Guides (hereafter referred to as "IEC Publication(s)"). Their preparation is entrusted to technical committees; any IEC National Committee interested in the subject dealt with may participate in this preparatory work. International, governmental and non-governmental organizations liaising with the IEC also participate in this preparation. IEC collaborates closely with the International Organization for Standardization (ISO) in accordance with conditions determined by agreement between the two organizations.
2) The formal decisions or agreements of IEC on technical matters express, as nearly as possible, an international consensus of opinion on the relevant subjects since each technical committee has representation from all interested IEC National Committees.
3) IEC Publications have the form of recommendations for international use and are accepted by IEC National Committees in that sense. While all reasonable efforts are made to ensure that the technical content of IEC Publications is accurate, IEC cannot be held responsible for the way in which they are used or for any misinterpretation by any end user.
4) In order to promote international uniformity, IEC National Committees undertake to apply IEC Publications transparently to the maximum extent possible in their national and regional publications. Any divergence between any IEC Publication and the corresponding national or regional publication shall be clearly indicated in the latter.
5) IEC itself does not provide any attestation of conformity. Independent certification bodies provide conformity assessment services and, in some areas, access to IEC marks of conformity. IEC is not responsible for any services carried out by independent certification bodies.
6) All users should ensure that they have the latest edition of this publication.
7) No liability shall attach to IEC or its directors, employees, servants or agents including individual experts and members of its technical committees and IEC National Committees for any personal injury, property damage or other damage of any nature whatsoever, whether direct or indirect, or for costs (including legal fees) and expenses arising out of the publication, use of, or reliance upon, this IEC Publication or any other IEC Publications.
8) Attention is drawn to the Normative references cited in this publication. Use of the referenced publications is indispensable for the correct application of this publication.
9) Attention is drawn to the possibility that some of the elements of this IEC Publication may be the subject of patent rights. IEC shall not be held responsible for identifying any or all such patent rights.

The main task of IEC technical committees is to prepare International Standards. However, a technical committee may propose the publication of a technical report when it has collected data of a different kind from that which is normally published as an International Standard, for example "state of the art".

This Technical Report cancels and replaces IEC/PAS 62544 published in 2011. This first edition constitutes a technical revision.

IEC/TR 62544, which is a technical report, has been prepared by subcommittee 22F: Power electronics for electrical transmission and distribution systems, of IEC technical committee 22: Power electronics.

The text of this technical report is based on the following documents:

Enquiry draft	Report on voting
22F/242/DTR	22F/250/RVC

Documents
Document Sharing Hub

Full document details: IEC TR 62544 2011

Full information on the voting for the approval of this technical report can be found in the report on voting indicated in the above table.

This publication has been drafted in accordance with the ISO/IEC Directives, Part 2.

The committee has decided that the contents of this publication will remain unchanged until the stability date indicated on the IEC web site under "http://webstore.iec.ch" in the data related to the specific publication. At this date, the publication will be

- reconfirmed,
- withdrawn,
- replaced by a revised edition, or
- amended.

A bilingual version of this publication may be issued at a later date.

Documents
Document Sharing Hub

Full document details: IEC TR 62544 2011

HIGH-VOLTAGE DIRECT CURRENT (HVDC) SYSTEMS – APPLICATION OF ACTIVE FILTERS

1 Scope

This technical report gives general guidance on the subject of active filters for use in high-voltage direct current (HVDC) power transmission. It describes systems where active devices are used primarily to achieve a reduction in harmonics in the d.c. or a.c. systems. This excludes the use of automatically retuned components.

The various types of circuit that can be used for active filters are described in the report, along with their principal operational characteristics and typical applications. The overall aim is to provide guidance for purchasers to assist with the task of specifying active filters as part of HVDC converters.

Passive filters are specifically excluded from this report.

2 Normative references

The following referenced documents are indispensable for the application of this document. For dated references, only the edition cited applies. For undated references, the latest edition of the referenced document (including any amendments) applies.

IEC/TS 60071-5, *Insulation co-ordination – Part 5: Procedures for high-voltage direct current (HVDC) converter stations*

IEC 60633, *Terminology for high-voltage direct-current (HVDC) transmission*

IEC 61000 (all parts), *Electromagnetic compatibility (EMC)*

IEC 61975, *High-voltage direct current (HVDC) installations – System tests*

IEC/TR 62001:2009, *High-voltage direct current (HVDC) systems – Guidebook to the specification and design evaluation of A.C. filters*

IEC/TR 62543, *High-voltage direct current (HVDC) power transmission using voltage sourced converters (VSC)*

IEEE 519, *IEEE Recommended Practices and Requirements for Harmonic Control in Electrical Power Systems*

3 Terms and definitions

For the purposes of this technical report, the terms and definitions given in IEC 60633 and IEC 62001:2009 for passive a.c. filters, as well as the following apply.

NOTE Only terms which are specific to active filters for HVDC are defined in this clause. Those terms that are either identical to or obvious extensions of IEC 60633 or IEC 62001:2009 terminology have not been defined.

Documents
Document Sharing Hub

Full document details: IEC TR 62544 2011

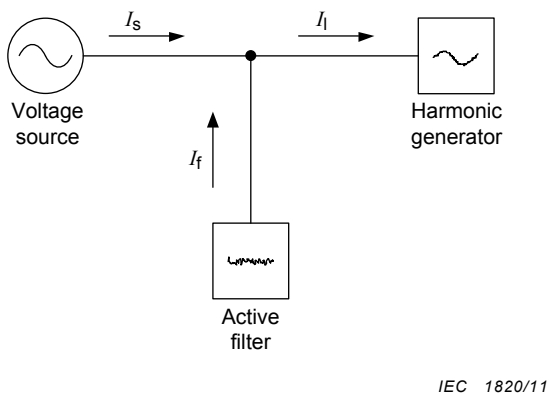

Figure 1 – Shunt connection

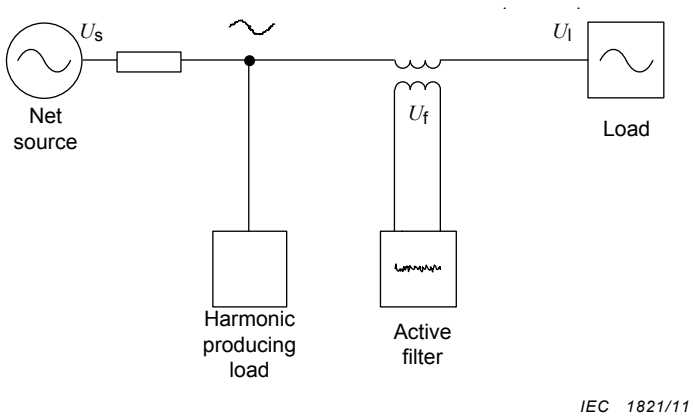

Figure 2 – Series connection

3.1 Active and passive filters

3.1.1
active filter
a filter whose response to harmonics is either wholly or partially governed by a controlled converter

3.1.2
passive filter
a filter whose response to harmonics is governed by the impedance of its components

3.2 Active filter topologies

3.2.1
shunt active filter
an active filter connected high-voltage (HV) to low-voltage (LV) or HV to ground such that it experiences the full a.c. or d.c. voltage of the HVDC system or its a.c. connection (see Figure 1)

3.2.2
series active filter
an active filter connected between the HVDC converter and the a.c. or d.c. supplies such that it must withstand the full HVDC system current, either a.c. or d.c. (see Figure 2)

3.2.3
shunt and series active filter
an active filter containing both series and shunt elements as defined above

Documents
Document Sharing Hub
Full document details: IEC TR 62544 2011

3.3 Power semiconductor terms

NOTE There are several types of power semiconductor devices which can be used in active filters for HVDC and currently the IGBT is the major device used in such converters. The term IGBT is used throughout this report to refer to the switched valve device. However, the report is equally applicable to other types of devices with turn-off capability in most of the parts.

3.3.1
insulated gate bipolar transistor
IGBT
a controllable switch with the capability to turn-on and turn-off a load current

NOTE 1 An IGBT has three terminals: a gate terminal (G) and two load terminals - emitter (E) and collector (C).

NOTE 2 By applying appropriate gate to emitter voltages, current in one direction can be controlled, i.e. turned on and turned off.

3.3.2
free-wheeling diode
FWD
power semiconductor device with diode characteristic.

NOTE 1 A FWD has two terminals: an anode (A) and a cathode (K). The current through the FWDs is in opposite direction to the IGBT current.

NOTE 2 FWDs are characterized by the capability to cope with high rates of decrease of current caused by the switching behaviour of the IGBT.

3.3.3
IGBT-diode pair
arrangement of IGBT and FWD connected in inverse parallel

3.4 Converter topologies

3.4.1
pulse width modulation
PWM
a converter operation technique using high frequency switching with modulation to produce a particular waveform when smoothed

3.4.2
two-level converter
a converter in which the voltage at the a.c. terminals of the VSC unit is switched between two discrete d.c. voltage levels

3.4.3
three-level converter
a converter in which the voltage at the a.c. terminals of the VSC unit is switched between three discrete d.c. voltage levels

3.4.4
multi-level converter
a converter in which the voltage at the a.c. terminals of the VSC unit is switched between more than three discrete d.c. voltage level.

4 Active filters in HVDC applications

4.1 General

The conversion process in an HVDC transmission system introduces harmonic currents into the d.c. transmission lines and the a.c. grid connected to the HVDC converters. These

AVA Documents
Document Sharing Hub
Full document details: IEC TR 62544 2011

harmonic currents may cause interference in the adjacent systems, like telecommunication equipment. The conventional solution to reduce the harmonics has been to install passive filters in HVDC converter stations [1][1]. When the power line consists of cables, this filtering is normally not necessary. The development of power electronics devices and digital computers has made it possible to achieve a new powerful way for a further reduction of harmonic levels, namely, active filters.

The active filters can be divided into two groups, active a.c. and d.c. filters. Active d.c. filter installations are in operation in several HVDC links and have been economically competitive due to more onerous requirements for telephone interference levels on the d.c. overhead lines (Figure 3). An active a.c. filter is already in operation as well. In addition to the active d.c. filter function of mitigating the harmonic currents on the d.c. overhead lines, the active a.c. filters may be part of several solutions in the HVDC scheme to improve reactive power exchange with the a.c. grid and to improve dynamic stability.

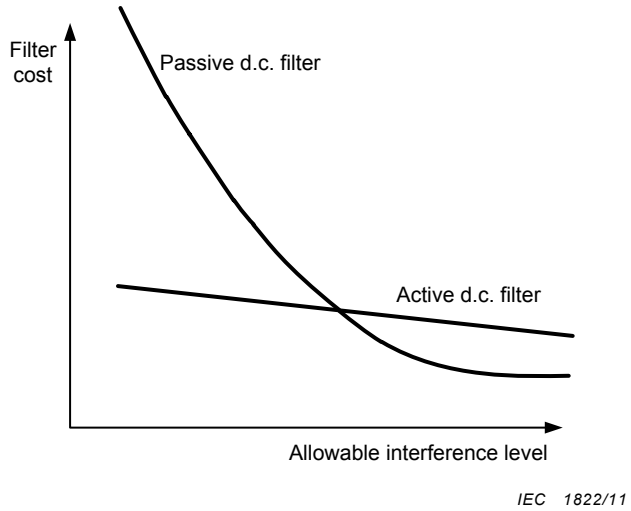

Figure 3 – Conceptual diagram of allowable interference level and d.c. filter cost

The features of active filters are the following:

- Active a.c. and d.c. filters consist of two parts, a passive part and a corresponding active part which are loaded with the same currents. Due to the fact that the passive a.c. filter is used to supply the HVDC converter demand of reactive power and thereby loaded with the fundamental current, the required rating of the d.c. filter active part is lower than the one of the a.c. filter active part.
- The control philosophy for the active d.c. filter is less complex than for the a.c. one.
- The present HVDC applications where active a.c. filters are feasible will be limited, due to the fact that a.c. filters are also required to supply the HVDC converter demand of reactive power. The filter size is therefore often well above the filtering demand.

Many recent and future HVDC projects use new converter technologies which allow the reactive compensation to be separated from the a.c. filters and thereby make the active a.c. filter more feasible. For line-commutated converters, capacitor commutated converters (CCC) and the controlled series capacitor converter (CSCC) allow reduced reactive power absorption. Moreover, self-commutated converters (which include most voltage sourced converters) are able to control active and reactive power independently, avoiding the need for separate reactive power compensation altogether.

[1] Figures in square brackets refer to the Bibliography.

Documents
Document Sharing Hub
Full document details: IEC TR 62544 2011

4.2 Semiconductor devices available for active filters

Three types of power semiconductor devices, suitable for use in an active filter, are available at present:

- metal-oxide-semiconductor field-effect transistor (MOSFET);
- insulated gate bipolar transistor (IGBT);
- gate turn-off thyristor (GTO) and other thyristor-derived devices such as the gate commutated thyristor (GCT) and integrated gate commutated thyristor (IGCT).

The MOSFET is an excellent switching device capable of switching at very high frequencies with relatively low losses, but with limited power handling capability.

The IGBT has a switching frequency capability which, although very good and sufficient to handle the frequencies within the active d.c. filter range, is inferior to the MOSFET. However the IGBT power handling is significantly higher than the MOSFET.

The GTO-type devices has the highest power handling capacity, but with a relatively limited switching speed far below the required frequency range for active d.c. filter. The use of GTO-type devices will probably be limited to handle frequencies below a few hundred of hertz.

The relatively high frequency band for active d.c. filtering excludes the use of thyristors and GTO. Even though the MOSFET and IGBT are suited as switching elements in a power stage, the limited power handling capacity on MOSFET and the installed cost evaluations tend to point on the use of IGBT in future power stages.

5 Active d.c. filters

5.1 Harmonic disturbances on the d.c. side

The main reason for specifying demands on the d.c. circuit is to keep disturbances in nearby telephone lines within an acceptable limit, which will vary depending on whether the telephone system consists of overhead lines or underground cables which are generally shielded and therefore have a better immunity [2]. A summary is given below to illustrate the demands which made it feasible to install the active filters. As described, the demand on disturbances can appear as an harmonic current on the d.c. line or as an induced voltage U_{ind} in a fictive telephone line. It should be kept in mind that the harmonic demand, the specific HVDC system and surroundings (earth resistivity, telephone system, etc.) all together define the d.c. filter solution.

The specified requirements:

- The induced voltage U_{ind} in a theoretically 1 km telephone line situated 1 km from the d.c. overhead line shall be below 10 mV for monopolar operation.
- A one minute mean value of the equivalent psophometric current I_{pe} fed into the d.c. pole overhead line shall be below 400 mA.

The mentioned induced voltage and the equivalent psophometric current are defined as:

$$U_{ind} = \sqrt{\sum_{n=1}^{50} (2\pi \cdot f_n \cdot M \cdot I_n \cdot p_n)^2} \tag{1}$$

$$I_{pe} = \frac{1}{p_{16}} \sqrt{\sum_{n=1}^{50} (k_n \cdot p_n \cdot I_n)} \tag{2}$$

Documents
Document Sharing Hub
Full document details: IEC TR 62544 2011

where

f_n is the frequency of the nth harmonic,

M is the mutual inductance between the telephone line and the power line,

k_n $= f_1 \times n/800$,

I_n is the vectorial sum of the nth harmonic current flowing in the line conductors (common mode/earth mode current),

p_n is the nth psophometric weighting factor defined by CCITT Directives 1963 [3] (see also Table 1),

p_{16} is the 16th psophometric weighting factor.

The characteristic harmonics n = 12, 24, 36, 48 as well as the non-characteristic harmonics up to n = 50 shall be considered.

Table 1 – The psophometric weighting factor at selected frequencies

Frequency, Hz	50	100	300	600	800	1 000	1 200	1 800	2 400	3 000
n	1	2	6	12	16	20	24	36	48	60
p_n factor	0,0007	0,009	0,295	0,794	1,0	1,122	1,0	0,76	0,634	0,525
$P_n \times k_n$	0,00004	0,001	0,111	0,595	1,0	1,403	1,5	1,71	1,902	1,969

5.2 Description of active d.c. filters

5.2.1 General

Active d.c. filters use a controllable converter to introduce currents in the network, presenting a waveform which counteracts the harmonics. This subclause describes types of power stages, converters to be used in active filters and the possible connections in HVDC schemes.

5.2.2 Types of converters available

5.2.2.1 General

Two basic types of switching converters are possible in an active d.c. filter; the current-source converter using inductive energy storage and the voltage-sourced converter (VSC) using capacitive energy storage.

5.2.2.2 Current source converters

In a current-source converter, the d.c. element is a current source, which normally consists of a d.c. voltage source power supply in series with an inductor. For correct operation, the current should flow continuously in the inductor. Hence if a.c. current is not required current must be by-passed within the converter. This fact restricts the switching actions. A simple current-source converter is shown in Figure 4.

5.2.2.3 Voltage sourced converters (VSC)

In the VSC, the d.c. element is a voltage source. This may be a d.c. power supply or, in the case of an active d.c. filter application, an energy storage unit. In practice, the voltage source for an active d.c. filter power stage is usually a capacitor with a small power supply to offset the power stage losses. A VSC also has the property that its a.c. output appears as a voltage source.

A circuit of simple VSC is shown in Figure 5.

AVA Documents Document Sharing Hub

Full document details: IEC TR 62544 2011

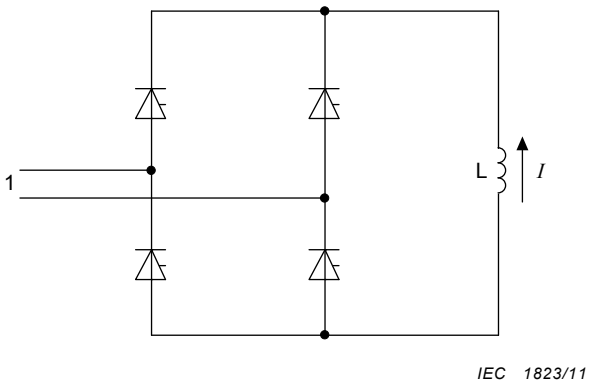

Key

1 AC current

Figure 4 – Simple current source converter

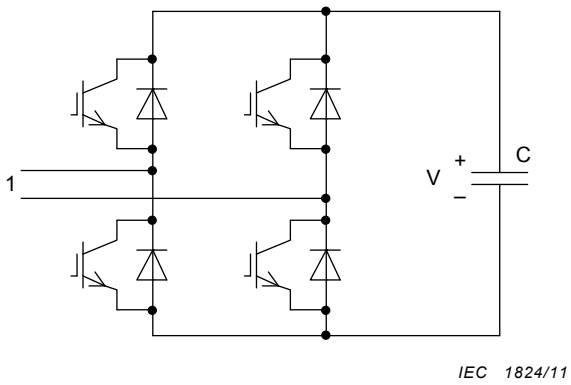

Key

1 AC voltage

Figure 5 – Simple voltage sourced converter

5.2.2.4 Comparison between current and voltage sourced converters

The current-source converter has a high internal impedance for currents through the converter, while the VSC has a low impedance. The VSC has no constraints on the switching pattern which can be employed, while the current-source converter is restricted as described above. The necessity for continuous current in the current-source converter, combined with the fact that (neglecting superconductivity) an inductor has higher losses than a capacitor, ensures that the losses in the current-source converter are higher than in the VSC. Another parameter influencing losses is that a current-source converter needs switching devices which can block reverse voltage. Most of the available semiconductors do not fulfil this requirement. In this case an extra diode in series with each device is necessary and this again increases the losses. Some GTOs are able to support reverse voltage, but these are less common than the GTOs which do not support reverse voltage. The former have higher losses than the more common devices.

Conclusion: Considering the above properties of current-source converter and VSC, the type most suited for power stage applications, particularly high power, is the VSC. The VSC has been preferred in all HVDC projects applicable today.

5.2.3 Connections of the active d.c. filter

5.2.3.1 General

Advantages and disadvantage of connecting the active filters at locations shown in Figure 6 have been discussed in several papers [4], [5], [6]. The active filters can either be connected as shunt active filters or as series active filters.

Documents
Document Sharing Hub
Full document details: IEC TR 62544 2011