IEC TS 60034-25

Edition 4.0 2022-06
COMMENTED VERSION

TECHNICAL SPECIFICATION

colour inside

Rotating electrical machines –
Part 25: AC electrical machines used in power drive systems – Application guide

IEC TS 60034-25:2022-06 CMV(en)

Documents
Document Sharing Hub

Full document details: IEC TS 60034-25 2022 CMV

THIS PUBLICATION IS COPYRIGHT PROTECTED
Copyright © 2022 IEC, Geneva, Switzerland

All rights reserved. Unless otherwise specified, no part of this publication may be reproduced or utilized in any form or by any means, electronic or mechanical, including photocopying and microfilm, without permission in writing from either IEC or IEC's member National Committee in the country of the requester. If you have any questions about IEC copyright or have an enquiry about obtaining additional rights to this publication, please contact the address below or your local IEC member National Committee for further information.

IEC Secretariat
3, rue de Varembé
CH-1211 Geneva 20
Switzerland

Tel.: +41 22 919 02 11
info@iec.ch
www.iec.ch

About the IEC
The International Electrotechnical Commission (IEC) is the leading global organization that prepares and publishes International Standards for all electrical, electronic and related technologies.

About IEC publications
The technical content of IEC publications is kept under constant review by the IEC. Please make sure that you have the latest edition, a corrigendum or an amendment might have been published.

IEC publications search - webstore.iec.ch/advsearchform
The advanced search enables to find IEC publications by a variety of criteria (reference number, text, technical committee, …). It also gives information on projects, replaced and withdrawn publications.

IEC Just Published - webstore.iec.ch/justpublished
Stay up to date on all new IEC publications. Just Published details all new publications released. Available online and once a month by email.

IEC Customer Service Centre - webstore.iec.ch/csc
If you wish to give us your feedback on this publication or need further assistance, please contact the Customer Service Centre: sales@iec.ch.

IEC Products & Services Portal - products.iec.ch
Discover our powerful search engine and read freely all the publications previews. With a subscription you will always have access to up to date content tailored to your needs.

Electropedia - www.electropedia.org
The world's leading online dictionary on electrotechnology, containing more than 22 300 terminological entries in English and French, with equivalent terms in 19 additional languages. Also known as the International Electrotechnical Vocabulary (IEV) online.

Documents
Document Sharing Hub

Full document details: IEC TS 60034-25 2022 CMV

IEC TS 60034-25

Edition 4.0 2022-06
COMMENTED VERSION

TECHNICAL SPECIFICATION

colour inside

Rotating electrical machines –
Part 25: AC electrical machines used in power drive systems – Application guide

INTERNATIONAL
ELECTROTECHNICAL
COMMISSION

ICS 29.160.01

ISBN 978-2-8322-3957-5

Warning! Make sure that you obtained this publication from an authorized distributor.

® Registered trademark of the International Electrotechnical Commission

Documents
Document Sharing Hub

Full document details: IEC TS 60034-25 2022 CMV

CONTENTS

FOREWORD 9
INTRODUCTION 11
1 Scope 12
2 Normative references 12
3 Terms and definitions 13
4 System characteristics 16
4.1 General 16
4.2 System information 16
4.3 Torque/speed considerations 17
4.3.1 General 17
4.3.2 Torque/speed capability 17
4.3.3 Electrical machine rating 20
4.3.4 Limiting factors on torque/speed capability 20
4.3.5 Safe operating speed, over-speed capability and over-speed test 20
4.3.6 Cooling arrangement 20
4.3.7 Voltage/frequency characteristics 21
4.3.8 Resonant speed bands 22
4.3.9 Duty cycles 22
4.4 Electrical machine requirements 23
5 Losses and their effects (for induction electrical machines fed from voltage source converters) 26
5.1 General 26
5.2 Location of the additional losses due to converter supply and ways to reduce them 27
5.3 Converter features to reduce the electrical machine losses 28
5.3.1 Reduction of fundamental losses 28
5.3.2 Reduction of additional losses due to converter supply 28
5.4 Use of filters to reduce additional electrical machine losses due to converter supply 29
5.5 Temperature influence on life expectancy 29
5.6 Determination of electrical machine efficiency 30
6 Acoustic noise, vibration and torsional oscillation 30
6.1 Acoustic noise 30
6.1.1 General 30
6.1.2 Changes in noise emission due to changes in speed 30
6.1.3 Magnetically excited noise 31
6.1.4 Sound power level determination and limits 33
6.2 Vibration (excluding torsional oscillation) 33
6.2.1 General 33
6.2.2 Vibration level determination and limits 34
6.3 Torsional oscillation 34
7 Electrical machine insulation electrical stresses 35
7.1 General 35
7.2 Causes 35
7.3 Winding electrical stress 37
7.4 Limits and responsibility 38

AVA Documents
Document Sharing Hub
Full document details: IEC TS 60034-25 2022 CMV

7.4.1 Electrical machines design for low voltage (≤ 1 000 V) ... 38
7.4.2 Electrical machines designed for medium and high voltage (> 1 000 V) ... 39
7.5 Methods of reduction of voltage stress ... 40
7.6 Insulation stress limitation ... 40
8 Bearing currents ... 41
8.1 Sources of bearing currents in converter-fed electrical ~~machines~~ motors ... 41
8.1.1 General ... 41
8.1.2 Circulating currents due to magnetic asymmetry ... 41
8.1.3 Electrostatic build-up ... 41
8.1.4 High-frequency ~~voltages~~ effects in converter operation ... 41
8.2 Generation of high-frequency bearing currents ... 42
~~8.2.1 General~~
~~8.2.2 Circulating current~~
~~8.2.3 Shaft earthing current~~
~~8.2.4 Capacitive discharge current~~
8.2.1 Common mode voltage ... 44
8.2.2 Motor HF equivalent circuit and the resulting bearing current types ... 45
8.2.3 Circulating current ... 47
8.2.4 Rotor ground current ... 48
8.2.5 Electrostatic Discharge Machining (EDM) currents ... 49
~~8.3 Common-mode circuit~~
~~8.3.1 General~~
~~8.3.2 System common-mode current flow~~
8.3 Consequences of excessive bearing currents ... 51
~~8.4 Stray capacitances~~
~~8.4.1 General~~
~~8.4.2 Major component of capacitance~~
~~8.4.3 Other capacitances~~
8.4 Preventing high-frequency bearing current damage ... 58
8.4.1 Basic approaches ... 58
8.4.2 Other preventive measures ... 58
8.4.3 Other factors and features influencing the bearing currents ... 61
8.5 Additional considerations for electrical ~~machines~~ motors fed by high voltage source converters ... 62
8.5.1 General ... 62
8.5.2 Bearing protection of cage induction, brushless synchronous and permanent magnet electrical ~~machines~~ motors ... 62
8.5.3 Bearing protection for slip-ring electrical ~~machines~~ motors and for synchronous electrical ~~machines~~ motors with brush excitation ... 62
8.6 Bearing current protection for electrical ~~machines~~ motors fed by high-voltage current source converters ... 62
9 Installation ... 62
9.1 Earthing, bonding and cabling ... 62
9.1.1 General ... 62
9.1.2 Earthing ... 63
9.1.3 Bonding of electrical machines ... 63
9.1.4 Electrical machine power cables for high switching frequency converters ... 64
9.2 Reactors and filters ... 69
9.2.1 General ... 69

Documents
Document Sharing Hub
Full document details: IEC TS 60034-25 2022 CMV

9.2.2 Output reactors 69
9.2.3 Voltage limiting filter (du/dt filter)....69
9.2.4 Sinusoidal filter 69
9.2.5 Electrical machine termination unit....69
9.3 Power factor correction....70
9.4 Integral electrical machines (integrated electrical machine and drive modules)....71
10 Additional considerations for permanent magnet (PM) synchronous electrical machines fed by voltage source converters....71
10.1 System characteristics....71
10.2 Losses and their effects....71
10.3 Noise, vibration and torsional oscillation....72
10.4 Electrical machine insulation electrical stresses....72
10.5 Bearing currents....72
10.6 Particular aspects of permanent magnets....72
11 Additional considerations for cage induction electrical machines fed by high voltage source converters 72
11.1 General....72
11.2 System characteristics....73
11.3 Losses and their effects....74
11.3.1 Additional losses in the stator and rotor winding 74
11.3.2 Measurement of additional losses 74
11.4 Noise, vibration and torsional oscillation....74
11.5 Electrical machine insulation electrical stresses....75
11.5.1 General....75
11.5.2 Electrical machine terminal overvoltage....75
11.5.3 Stator winding voltage stresses in converter applications....75
11.6 Bearing currents....77
12 Additional considerations for synchronous electrical machines fed by voltage source converters 77
12.1 System characteristics....77
12.2 Losses and their effects....77
12.3 Noise, vibration and torsional oscillation....77
12.4 Electrical machine insulation electrical stresses....77
12.5 Bearing currents....78
13 Additional considerations for cage induction electrical machines fed by block-type current source converters....78
13.1 System characteristics (see Figure 35 and Figure 36)....78
13.2 Losses and their effects....79
13.3 Noise, vibration and torsional oscillation....81
13.4 Electrical machine insulation electrical stresses....81
13.5 Bearing currents....81
13.6 Additional considerations for six-phase cage induction electrical machines....82
14 Additional considerations for synchronous electrical machines fed by LCI....82
14.1 System characteristics....82
14.2 Losses and their effects....84
14.3 Noise, vibration and torsional oscillation....84
14.4 Electrical machine insulation electrical stresses....84
14.5 Bearing currents....84

AVA Documents
Document Sharing Hub
Full document details: IEC TS 60034-25 2022 CMV

15 Additional considerations for cage induction electrical machines fed by pulsed current source converters (PWM CSI) ... 84
15.1 System characteristics (see Figure 39) ... 84
15.2 Losses and their effects ... 85
15.3 Noise, vibration and torsional oscillation ... 85
15.4 Electrical machine insulation electrical stresses ... 85
15.5 Bearing currents ... 86
16 Wound rotor induction (asynchronous) electrical machines supplied by voltage source converters in the rotor circuit ... 86
16.1 System characteristics ... 86
16.2 Losses and their effects ... 86
16.3 Noise, vibration and torsional oscillation ... 86
16.4 Electrical machine insulation electrical stresses ... 86
16.5 Bearing currents ... 86
17 Other electrical machine/converter systems ... 87
17.1 Drives supplied by cyclo-converters ... 87
17.2 Wound rotor induction (asynchronous) electrical machines supplied by current source converters in the rotor circuit ... 88
18 Special consideration for standard fixed-speed induction electrical machines in the scope of IEC 60034-12 when fed from voltage source converter and motor requirements to be considered a converter capable motor ... 89
18.1 General ... 89
18.2 Torque derating during converter operation ... 90
18.2.1 General ... 90
18.2.2 Self-cooled motors ... 91
18.2.3 Non self-cooled motors ... 92
18.3 Losses and their effects ... 92
18.4 Noise, vibrations and torsional oscillation ... 92
18.5 Electrical machine insulation electrical stresses ... 92
18.5.1 General ... 92
18.5.2 Converter capable motor ... 93
18.6 Bearing currents in converter capable motors ... 94
18.7 Speed range mechanical limits ... 95
18.7.1 General ... 95
18.7.2 Maximum ~~safe operating~~ speed ... 95
18.7.3 Minimum speed ... 95
18.8 Overload torque capability ... 96
18.9 Excess overload current limits ... 96
18.9.1 General ... 96
18.9.2 Converter capable motor ... 96
18.10 Volts/Hz ratio and voltage boost ... 96
18.11 Resonance ... 96
18.12 Hazardous area operation ... 97
18.12.1 General ... 97
18.12.2 Converter capable motor ... 97
18.13 Unusual service conditions ... 98
18.13.1 Converter capable motors ... 98
18.13.2 Unusual converter-fed applications ... 98
19 Additional considerations for synchronous reluctance electrical machine fed by voltage source converters ... 98

AVA Documents
Document Sharing Hub

19.1 System characteristics 98
19.2 Losses and their effects 98
19.3 Noise, vibration and torsional oscillation 99
19.4 Electrical machine insulation electrical stresses 99
19.5 Bearing currents 99
19.6 Particular aspects of synchronous reluctance electrical machines 99
Annex A (informative) Converter characteristics 100
A.1 Converter control types 100
A.1.1 General 100
A.1.2 Converter type considerations 101
A.2 Converter output voltage generation (for voltage source converters) 101
A.2.1 Pulse width modulation (PWM) 101
A.2.2 Hysteresis (sliding mode) 102
A.2.3 Influence of switching frequency 102
A.2.4 Multi-level converters 103
A.2.5 Parallel converter operation 104
Annex B (informative) Output characteristics of 2 level voltage source converter spectra 105
Annex C (informative) Voltages to be expected at the power interface between converter and electrical machine 109
Annex D (informative) Speed and harmonic capability of converter capable induction motor 113
D.1 General 113
D.2 Harmonic capability of converter capable motors 113
D.3 Speed capability and derating in variable torque application 114
D.4 Speed capability and derating in a constant torque application 114
Bibliography 116
List of comments 117

Figure 1 – Torque/speed capability 18
~~Figure 2 – Converter output current ..... ~~
Figure 2 – Current required by motor 19
Figure 3 – Examples of possible converter output voltage/frequency characteristics 22
Figure 4 – Example for the dependence of the electrical machine losses caused by harmonics $P_{h,}$ related to the losses P_{f1} at operating frequency f_1, on the switching frequency f_s in case of 2 level voltage source converter supply 27
Figure 5 – Example of measured losses P_L as a function of frequency f and supply type 28
Figure 6 – Additional losses ΔP_L of an electrical machine (same electrical machine as Figure 5) due to converter supply, as a function of pulse frequency f_p, at 50 Hz rotational frequency 29
Figure 7 – Relative fan noise as a function of fan speed 31
Figure 8 – Vibration modes of the stator core 32
Figure 9 – Typical surges at the terminals of an electrical machine fed from a PWM converter 35
Figure 10 – Typical voltage surges on one phase at the converter and at the electrical machine terminals (2 ms/division) 36
Figure 11 – Individual short rise-time surge from Figure 10 (1 µs/division) 36

AVA Documents
Document Sharing Hub
Full document details: IEC TS 60034-25 2022 CMV

Figure 12 – Definition of the rise-time t_r of the voltage pulse at the electrical machine terminals 37
Figure 13 – First turn voltage as a function of the rise-time 38
Figure 14 – Discharge pulse occurring as a result of converter generated voltage surge at electrical machine terminals (100 ns/division) 40
~~Figure 15 – Possible bearing currents ..... ~~
~~Figure 16 – Electrical machine capacitances ..... ~~
~~Figure 17 – Bearing pitting due to electrical discharge (pit diameter 30 µm to 50 µm) ..... ~~
~~Figure 18 – Fluting due to excessive bearing current ..... ~~
Figure 15 – Classification of bearing currents 41
Figure 16 – Parasitic impedances to earth of drive system components 42
Figure 17 – Common mode voltage a) determination b) waveform example 45
Figure 18 – HF equivalent circuit diagram (a) of a motor (b) geometrical representation of capacitances 46
Figure 19 – Graphical representation of the different high frequency bearing current types in the drive unit highlighting the involved physical components 47
Figure 20 – Principle of circulating currents formation 48
Figure 21 – Rotor ground current principle 49
Figure 22 – Example of measured EDM-current pulses for a 400 V and 500 kW induction motor in converter operation 50
Figure 23 – Photographs of damaged motor bearings 53
Figure 24 – Bonding strap from electrical machine terminal box to electrical machine frame 64
Figure 25 – Examples of shielded electrical machine cables and connections 65
Figure 26 – Parallel symmetrical cabling of high-power converter and electrical machine 66
Figure 27 – Converter connections with 360º HF cable glands showing the Faraday cage 67
Figure 28 – Electrical machine end termination with 360º connection 67
Figure 29 – Cable shield connection 68
Figure 30 – Characteristics of preventative measures 70
Figure 31 – Schematic of typical three-level converter 73
Figure 32 – Output voltage and current from typical three-level converter 73
Figure 33 – Typical first turn voltage ΔU (as a percentage of the line-to-ground voltage) as a function of du/dt 75
Figure 34 – Medium-voltage and high-voltage form-wound coil insulating and voltage stress control materials 76
Figure 35 – Schematic of block-type current source converter 78
Figure 36 – Current and voltage waveforms of block-type current source converter 78
Figure 37 – Influence of converter supply on the losses of a cage induction electrical machine (frame size 315 M, design N) with rated values of torque and speed 80
Figure 38 – Schematic and voltage and current waveforms for a synchronous electrical machine supplied from a current source converter 83
Figure 39 – Schematic of pulsed current source converter 84
~~Figure 40 – Limiting curve of admissible impulse voltage $\hat{U}_{LL}/U_N$ (peak value of line to line voltage including voltage reflection and damping/rated voltage) at the electrical machine terminals as a function of the rise-time t_r ..... ~~

Documents
Document Sharing Hub
Full document details: IEC TS 60034-25 2022 CMV

Figure 40 – Voltages and currents of pulsed current source converter 85
Figure 41 – Schematic of cyclo-converter 87
Figure 42 – Voltage and current waveforms of a cyclo-converter 87
Figure 43 – Diagram comparing converter capable motor to converter duty motor 89
Figure 44 – Fundamental voltage U_1 as a function of operating frequency f_1 90
Figure 45 – Torque derating factor for cage induction electrical machines of design N, IC ~~0141~~411 (self-circulating cooling) as a function of operating frequency f_1 (example) 91
Figure A.1 – Effects of switching frequency on electrical machine and converter losses 102
Figure A.2 – Effects of switching frequency on acoustic noise 103
Figure A.3 – Effects of switching frequency on torque ripple 103
Figure B.1 – Waveform of line-to-line voltage U_{LL} for voltage source converter supply with switching frequency f_s = 30 × f_1 (example) 105
Figure B.2 – Typical output voltage frequency spectra ~~of converter output voltage~~ for a constant frequency PWM control versus hysteresis control 106
Figure B.3 – Typical output voltage frequency spectra ~~of converter output voltage~~ for random frequency PWM versus hysteresis control 106
Figure B.4 – Typical ~~spectra of converter~~ output voltage frequency spectra for a two-phase modulated control versus hysteresis modulation 107
Figure B.5 – Typical time characteristics of electrical machine current for a Constant frequency PWM control versus hysteresis control 107
Figure B.6 – Typical time characteristics of electrical machine current for a two-phase modulated control versus hysteresis modulation 108
Figure C.1 – Example of typical voltage curves and parameters of a two level inverter versus time at the electrical machine terminals (phase to phase voltage; taken from IEC TS 61800-8) 109
Figure D.1 – Derating curve for harmonic voltages 114
Figure D.2 – Torque capability at reduced speeds due to the effects of reduced cooling (applyies to 50 Hz or 60 Hz design N) 115

Table 1 – Significant factors affecting torque/speed capability 20
Table 2 – Electrical machine design considerations 24
Table 3 – Electrical machine parameters for the tuning of the converter 25
Table 4 – Operating voltage at the terminals in units of U_N where the electrical machines may operate reliably without special agreements between manufacturers and system integrators 39
Table 5 – Different grades of roller bearing damages 54
Table 6 – Effectiveness of bearing current counter measures 59

Documents
Document Sharing Hub
Full document details: IEC TS 60034-25 2022 CMV

INTERNATIONAL ELECTROTECHNICAL COMMISSION

ROTATING ELECTRICAL MACHINES –

Part 25: AC electrical machines used in power drive systems – Application guide

FOREWORD

1) The International Electrotechnical Commission (IEC) is a worldwide organization for standardization comprising all national electrotechnical committees (IEC National Committees). The object of IEC is to promote international co-operation on all questions concerning standardization in the electrical and electronic fields. To this end and in addition to other activities, IEC publishes International Standards, Technical Specifications, Technical Reports, Publicly Available Specifications (PAS) and Guides (hereafter referred to as "IEC Publication(s)"). Their preparation is entrusted to technical committees; any IEC National Committee interested in the subject dealt with may participate in this preparatory work. International, governmental and non-governmental organizations liaising with the IEC also participate in this preparation. IEC collaborates closely with the International Organization for Standardization (ISO) in accordance with conditions determined by agreement between the two organizations.
2) The formal decisions or agreements of IEC on technical matters express, as nearly as possible, an international consensus of opinion on the relevant subjects since each technical committee has representation from all interested IEC National Committees.
3) IEC Publications have the form of recommendations for international use and are accepted by IEC National Committees in that sense. While all reasonable efforts are made to ensure that the technical content of IEC Publications is accurate, IEC cannot be held responsible for the way in which they are used or for any misinterpretation by any end user.
4) In order to promote international uniformity, IEC National Committees undertake to apply IEC Publications transparently to the maximum extent possible in their national and regional publications. Any divergence between any IEC Publication and the corresponding national or regional publication shall be clearly indicated in the latter.
5) IEC itself does not provide any attestation of conformity. Independent certification bodies provide conformity assessment services and, in some areas, access to IEC marks of conformity. IEC is not responsible for any services carried out by independent certification bodies.
6) All users should ensure that they have the latest edition of this publication.
7) No liability shall attach to IEC or its directors, employees, servants or agents including individual experts and members of its technical committees and IEC National Committees for any personal injury, property damage or other damage of any nature whatsoever, whether direct or indirect, or for costs (including legal fees) and expenses arising out of the publication, use of, or reliance upon, this IEC Publication or any other IEC Publications.
8) Attention is drawn to the Normative references cited in this publication. Use of the referenced publications is indispensable for the correct application of this publication.
9) Attention is drawn to the possibility that some of the elements of this IEC Publication may be the subject of patent rights. IEC shall not be held responsible for identifying any or all such patent rights.

This commented version (CMV) of the official standard IEC TS 60034-25:2022 edition 4.0 allows the user to identify the changes made to the previous IEC TS 60034-25:2014 edition 3.0. Furthermore, comments from IEC TC 2 experts are provided to explain the reasons of the most relevant changes, or to clarify any part of the content.

A vertical bar appears in the margin wherever a change has been made. Additions are in green text, deletions are in strikethrough red text. Experts' comments are identified by a blue-background number. Mouse over a number to display a pop-up note with the comment.

This publication contains the CMV and the official standard. The full list of comments is available at the end of the CMV.

Documents
Document Sharing Hub

Full document details: IEC TS 60034-25 2022 CMV

IEC TS 60034-25 has been prepared by IEC technical committee 2: Rotating machinery. It is a Technical Specification.

This fourth edition of IEC TS 60034-25 cancels and replaces the third edition, published in 2014.

This edition includes the following significant technical changes with respect to the previous edition: 1

a) The definitions of a converter capable motor and a converter duty motor are added.
b) Clause 18 modified to include the performance expectations of a converter capable motor.
c) Clause 8 modified to update shaft currents section.
d) Annex D added to define the derating requirements.

The text of this Technical Specification is based on the following documents:

Draft	Report on voting
2/2067/DTS	2/2097/RVDTS

Full information on the voting for its approval can be found in the report on voting indicated in the above table.

The language used for the development of this Technical Specification is English.

This document was drafted in accordance with ISO/IEC Directives, Part 2, and developed in accordance with ISO/IEC Directives, Part 1 and ISO/IEC Directives, IEC Supplement, available at www.iec.ch/members_experts/refdocs. The main document types developed by IEC are described in greater detail at www.iec.ch/standardsdev/publications.

A list of all parts in the IEC 60034 series, published under the general title *Rotating electrical machines*, can be found on the IEC website.

The committee has decided that the contents of this document will remain unchanged until the stability date indicated on the IEC website under webstore.iec.ch in the data related to the specific document. At this date, the document will be

- reconfirmed,
- withdrawn,
- replaced by a revised edition, or
- amended.

IMPORTANT – The 'colour inside' logo on the cover page of this publication indicates that it contains colours which are considered to be useful for the correct understanding of its contents. Users should therefore print this document using a colour printer.

Documents
Document Sharing Hub

Full document details: IEC TS 60034-25 2022 CMV

INTRODUCTION

The performance characteristics and operating data for converter-fed electrical machines are influenced by the complete drive system, comprising supply system, converter, cabling, electrical machine, mechanical shafting and control equipment. Each of these components exists in numerous technical variants. Any values quoted in this document are thus indicative only.

In view of the complex technical interrelations within the system and the variety of operating conditions, it is beyond the scope and object of this document to specify numerical or limiting values for all the quantities which are of importance for the design of the power drive system.

To an increasing extent, it is the practice that power drive systems consist of components produced by different manufacturers. The object of this document is to explain, as far as possible, the influence of these components on the design of the electrical machine and its performance characteristics.

This document deals with both AC electrical machines which are specifically designed for converter supply and converter-fed electrical machines within the scope of IEC 60034-12, which are designed originally for mains supply.

Documents
Document Sharing Hub

Full document details: IEC TS 60034-25 2022 CMV

ROTATING ELECTRICAL MACHINES –

Part 25: AC electrical machines used in power drive systems – Application guide

1 Scope

This part of IEC 60034 describes the performance characteristics of AC electrical machines for use on converter supplies. For electrical machines specifically designed for converter duty application design features are defined. It also specifies the interface parameters and interactions between the electrical machine and the converter including installation guidance as part of a power drive system, but except for the voltage at the power interface which is described in IEC TS 61800-8.

The general requirements of relevant parts of the IEC 60034 series of standards also apply to electrical machines within the scope of this document.

For electrical machines operating in potentially explosive atmospheres, additional requirements as described in the IEC 60079 series ~~or IEC 61241 series~~ for dust ignition proof apply.

This document is not primarily concerned with safety. However, some of its recommendations may have implications for safety, which ~~should be~~ are considered as necessary.

Where a converter manufacturer provides specific installation recommendations, they ~~should~~ take precedence over the recommendations of this document.

2 Normative references

The following documents are referred to in the text in such a way that some or all of their content constitutes requirements of this document. For dated references, only the edition cited applies. For undated references, the latest edition of the referenced document (including any amendments) applies.

IEC 60034-1:~~2010~~2022, *Rotating electrical machines – Part 1: Rating and performance*

IEC 60034-2-1, *Rotating electrical machines – Part 2-1: Standard methods for determining losses and efficiency from tests (excluding machines for traction vehicles)*

IEC 60034-2-2, *Rotating electrical machines – Part 2-2: Specific methods for determining separate losses of large machines from tests – Supplement to IEC 60034-2-1*

IEC 60034-2-3, *Rotating electrical machines – Part 2-3: Specific test methods for determining losses and efficiency of converter-fed AC induction motors*

IEC 60034-6, *Rotating electrical machines – Part 6: Methods of cooling (IC Code)*

IEC 60034-9:~~2003~~2021, *Rotating electrical machines – Part 9: Noise limits* ~~Amendment 1:2007~~

IEC 60034-12, *Rotating electrical machines – Part 12: Starting performance of single-speed three-phase cage induction motors*

Documents
Document Sharing Hub

Full document details: IEC TS 60034-25 2022 CMV

IEC 60034-14:~~2003~~2018, *Rotating electrical machines – Part 14: Mechanical vibration of certain machines with shaft heights 56 mm and higher – Measurement, evaluation and limits of vibration severity*
~~Amendment 1:2007~~

IEC ~~TS~~ 60034-18-41:2014, *Rotating electrical machines – Part 18-41: Partial discharge free electrical insulation systems (Type I) used in rotating electrical machines fed from voltage converters – Qualification and quality control tests*
IEC 60034-18-41:2014/AMD1:2019

IEC ~~TS~~ 60034-18-42:2017, *Rotating electrical machines – Part 18-42:~~ Qualification and acceptance tests for~~ Partial discharge resistant electrical insulation systems (Type II) used in rotating electrical machines fed from voltage converters – Qualification tests*
IEC 60034-18-42:2017/AMD1:2020

~~IEC 60050 (all parts): *International Electrotechnical Vocabulary* (available at http://www.electropedia.org)~~

IEC 60079 (all parts): *Explosive atmospheres*

IEC 60079-7, *Explosive atmospheres – Part 7: Equipment protection by increased safety "e"*

IEC TR 61000-5-1, *Electromagnetic compatibility (EMC) – Part 5: Installation and mitigation guidelines – Section 1: General considerations – Basic EMC publication*

IEC TR 61000-5-2, *Electromagnetic compatibility (EMC) – Part 5: Installation and mitigation guidelines – Section 2: Earthing and cabling*

~~IEC 61800-2:1998, *Adjustable speed electrical power drive systems – Part 2: General requirements – Rating specifications for low voltage adjustable frequency a.c. power drive systems*~~

IEC 61800-3, *Adjustable speed electrical power drive systems – Part 3: EMC requirements and specific test methods*

IEC 61800-5-1, *Adjustable speed electrical power drive systems – Part 5-1: Safety requirements – Electrical, thermal and energy*

IEC TS 61800-8:2010, *Adjustable speed electrical power drive systems – Part 8: Specification of voltage on the power interface*

IEC TS 62578:~~2009~~2015, *Power electronics systems and equipment – Operation conditions and characteristics of active infeed converter (AIC) applications including design recommendations for their emission values below 150 kHz*

3 Terms and definitions

For the purposes of this document, the following terms and definitions apply.

ISO and IEC maintain terminological databases for use in standardization at the following addresses:

- IEC Electropedia: available at http://www.electropedia.org/
- ISO Online browsing platform: available at http://www.iso.org/obp

Documents
Document Sharing Hub

Full document details: IEC TS 60034-25 2022 CMV

3.1
bearing voltage ratio
BVR
ratio of the capacitively coupled bearing voltage to the common-mode voltage

3.2
bonding
electrical connection of metallic parts of an installation together and to ground (earth)

Note 1 to entry: For the purposes of this document, this definition combines elements of IEC 60050-195:~~1998~~2021, 195-01-10 (equipotential bonding) and IEC 60050-195:2021,195-01-16 (functional equipotential bonding).

~~**3.3**~~
~~**common-mode voltage (current)**~~
~~arithmetic mean of the phase voltages (currents) to earth~~

3.3
common-mode voltage
u_{CM}
mean of the instantaneous values of the phase voltages appearing between each phase conductor and earth

[SOURCE: IEC 60050-161: 1990, 161-04-09]

3.4
common-mode current
i_{CM}
sum of the instantaneous values of the line currents

3.5
converter
unit for electronic power conversion, changing one or more electrical characteristics and comprising one or more electronic switching devices and associated components, such as transformers, filters, commutation aids, controls, protections and auxiliaries, if any

Note 1 to entry: This definition is taken from IEC 61800-2 and, for the purposes of this document, embraces the terms complete drive module (CDM) and basic drive module (BDM) as used in the IEC 61800 series.

~~[SOURCE: IEC 61800-2:1998, 2.2.1, modified (Note 1 to entry added)]~~

3.6
converter-fed electrical machine
electrical machine fed from a frequency converter independent of whether it is specifically designed for converter supply or whether it is an electrical machine within the scope of IEC 60034-12, which is designed originally for mains supply

3.7
fixed-speed electrical machine
electrical machine rated by output power for 50 Hz and/or 60 Hz on-line operation

Note 1 to entry: Fixed-speed electrical machines may be capable of frequency converter operation with variable speed.

Documents
Document Sharing Hub
Full document details: IEC TS 60034-25 2022 CMV

3.8
electromagnetic compatibility
EMC
ability of an equipment or system to function satisfactorily in its electromagnetic environment without introducing intolerable electromagnetic disturbances to anything in that environment

[SOURCE: IEC 60050-161:1990, 161-01-07]

3.9
field weakening
electrical machine operating mode where electrical machine flux is less than the flux corresponding to the electrical machine rating

3.10
rise time
time interval between the 10 % and 90 % points of the zero-to-peak voltage (see Figure 12)

3.11
power drive system
PDS
system consisting of power equipment (composed of converter section, AC electrical machine and other equipment such as, but not limited to, the feeding section), and control equipment (composed of switching control – on/off for example – voltage, frequency, or current control, firing system, protection, status monitoring, communication, tests, diagnostics, process interface/ port, etc.)

3.12
protective earthing
PE
earthing a point or points in a system or in an installation or in equipment for the purposes of electrical safety

[SOURCE: IEC 60050-195:~~1998~~2021, 195-01-11, modified: "electrical" added before "safety".]

3.13
skip band
small band of operating frequencies where steady-state operation of the PDS is inhibited

3.14
surface transfer impedance
quotient of the voltage induced in the centre conductor of a coaxial line per unit length by the current on the external surface of the coaxial line

[SOURCE: IEC 60050-161:1990, 161-04-15]

3.15
system integrator
person or organization which brings the components of PDS together according to his scope of supply and has therefore the system responsibility

3.16
rated voltage
U_N
root-mean-square value (RMS) of the fundamental line-to-line voltage assigned by the manufacturer for a specified power frequency operating condition of an electrical machine and indicated on its rating plate

Documents
Document Sharing Hub
Full document details: IEC TS 60034-25 2022 CMV

3.17
jump voltage
change in voltage at the terminals of the electrical machine occurring at the start of each impulse when fed from a converter

Note 1 to entry: This is sometime referred to as step voltage.

3.18
converter capable motor 2
electric machine designed for direct online start and suitable for operation on a power electronic frequency converter without special filtering

Note 1 to entry: Such motors include but are not limited to IEC Design N, NE, H, or HE, or NEMA Design A, B, or C which may be subject to energy efficiency regulation in the EU, North America or other locations

Note 2 to entry: The intent of the converter capable motor is to run within the thermal class of the insulation system; but as the harmonic content of the converter output voltage varies between different drive topologies, coordination with the manufacturer may be required by the end user.

3.19
converter duty motor 3
electrical machine designed specifically for operation fed by a power electronic frequency converter with a temperature rise within the specified insulation thermal class or thermal class

Note 1 to entry: Such motors have no IEC Design or NEMA Design letter and are exempt from energy efficiency regulation in the EU, North America and other locations.

4 System characteristics

4.1 General

Although the steps in specifying electrical machine and converter features are similar for any application, the final selections are greatly influenced by the type of application. In this clause, these steps are described, and the effects of various application load types are discussed.

NOTE Converter capable motor are usually IEC Design N, NE, NEY, H, HE, or HEY, covered by IEC 60034-12 or NEMA Design A, B, or C, covered by NEMA MG 1, and may be subject to National energy efficiency regulations (MEPS) in the EU, North American and other locations.

4.2 System information

Complete application information that considers the driven load, electrical machine, converter, and utility power supply, is the best way to achieve the required performance of the entire system. In general, this information should include:

- the power or torque requirements at various speeds;
- the desired speed range of the load and electrical machine;
- the acceleration and deceleration rate requirements of the process being controlled;
- starting requirements including the frequency of starts and a description of the load (the inertia seen at the electrical machine shaft, load torque during starting);
- the duty cycle of the application (a continuous process or a combination of starts, stops, and speed changes; see ~~3.1 of~~ clause duty in IEC 60034-1~~:2010~~);
- a general description of the type of application including the environment in which the PDS components will operate;
- a description of additional functionality that may not be met with the electrical machine and converter only (for example: electrical machine temperature monitoring, ability to bypass the converter if necessary, special sequencing circuits or speed reference signals to control the PDS);

AVA Documents
Document Sharing Hub
Full document details: IEC TS 60034-25 2022 CMV

- a description of the available electrical supply power and wiring. The final configuration may be affected by the requirements of the system selected.

4.3 Torque/speed considerations

4.3.1 General

The typical torque/speed characteristics of converter-fed electrical machines, the significant influencing factors and their consequences are shown in Figure 1, Figure 2 and Figure 3. Depending on the performance requirements of the PDS, different electrical machine designs are possible for an adaptation of the individual limiting values.

NOTE Figure 1 to Figure 3 do not show the possible skip bands (see 4.3.8).

4.3.2 Torque/speed capability

Figure 1 shows the torque/speed capability of converter-fed electrical machines. The maximum available torque is limited by the rating of the electrical machine and by the current limitation of the converter. Above the field-weakening frequency f_0 and speed n_0 the electrical machine can operate with constant power with a torque proportional to $1/n$. For induction electrical machines, if the minimum breakdown torque (which is proportional to $1/n^2$) is reached, the power has to be further reduced proportional to $1/n$, resulting in torque proportional to $1/n^2$ (extended range). For synchronous electrical machines, the extended range does not apply. The maximum usable speed n_{max} is limited not only by the reduction of torque due to field-weakening at speeds above n_0, but also by the mechanical strength and stability of the rotor, by the speed capability of the bearing system, and by other mechanical parameters. The short-term curves represent the usability of the motor that is commonly needed but does not necessarily represent its maximum capability.

At low frequency, the available torque may be reduced in self-cooled electrical machines to avoid the possibility of overheating.

In some applications, for example with a high moment of inertia, it may be possible to apply a short-time torque boost for starting.

Documents
Document Sharing Hub

Full document details: IEC TS 60034-25 2022 CMV

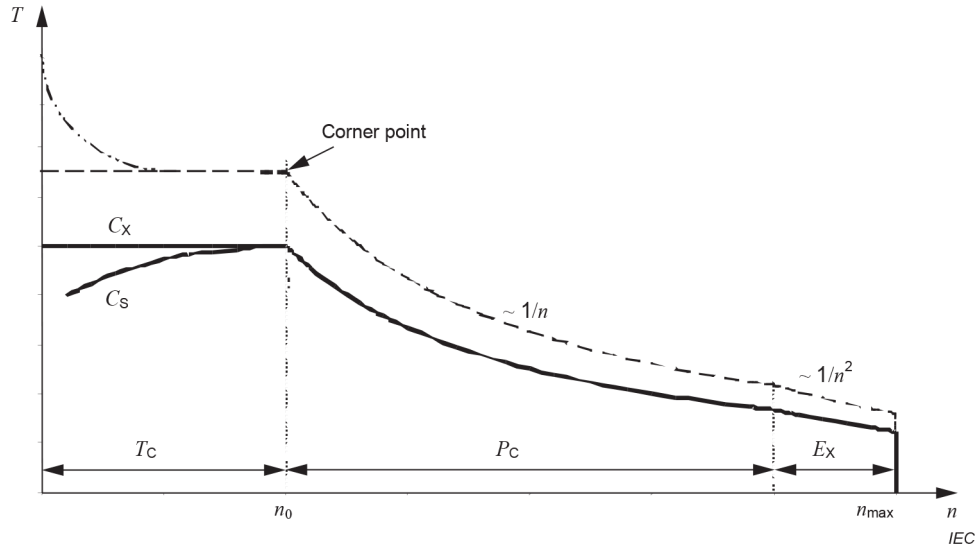

Key

———	Continuous operation	T_C	Constant torque range	C_X	Separate cooling
--------	Short-time operation	P_C	Constant power range	C_S	Self-cooling
—·—·—	Starting torque boost	E_X	Extended range (for induction electrical machines)	T	Torque
n	Speed	n_0	Speed ay corner point		
n_{max}	Maximum speed				

Figure 1 – Torque/speed capability

Figure 2 shows the corresponding converter output current (I) capability.

Documents
Document Sharing Hub
Full document details: IEC TS 60034-25 2022 CMV

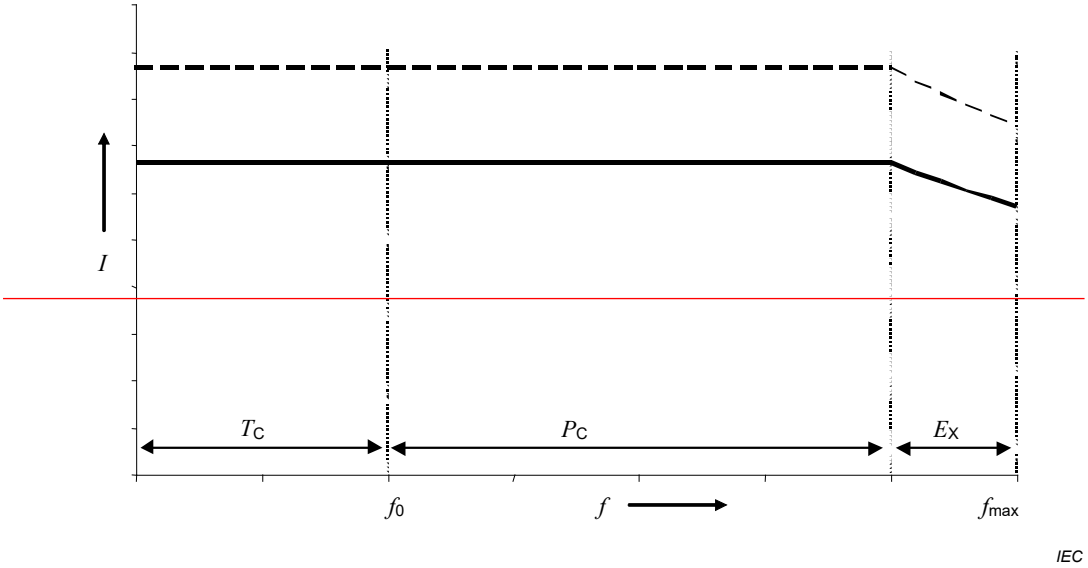

~~Figure 2 – Converter output current~~

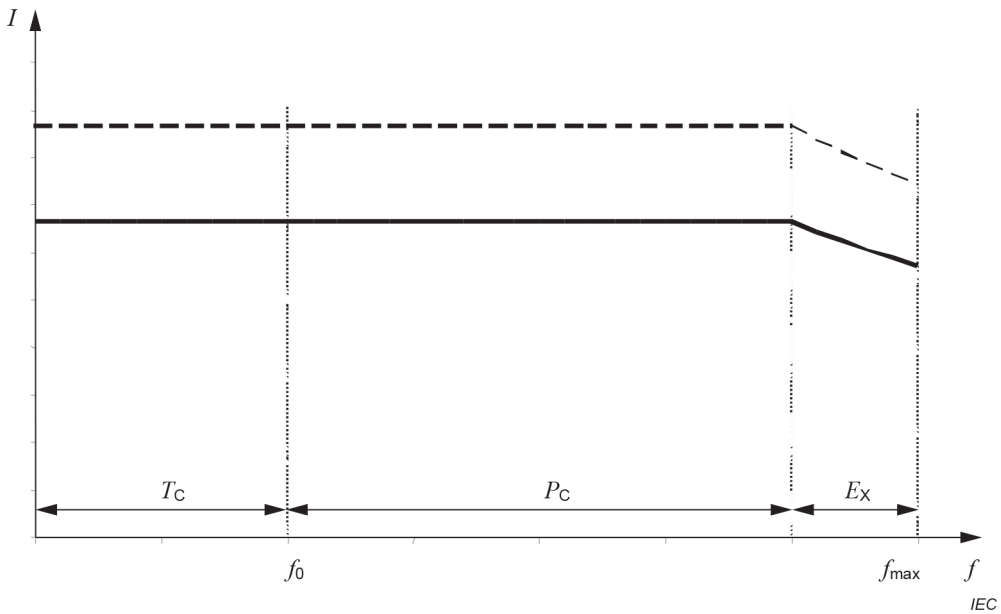

Key

———	Continuous operation	I	Current		
--------	Short-time operation	P_C	Constant power range		
f	Speed	E_X	Extended range (for induction electrical machines)	T_C	Constant torque range
f_0	Speed at corner point			f_{max}	Maximum speed

Figure 2 – Current required by motor

NOTE The current in Figure 2 is shown as constant in the constant power (P_C) range. This would assume that the power factor remains constant. Normally for the current to remain constant, the power will have to be reduced or the current will increase as the load get closer to motor break-down and the power factor reduces.

Documents
Document Sharing Hub
Full document details: IEC TS 60034-25 2022 CMV

4.3.3 Electrical machine rating

The rated point, where the electrical machine designed for converter application has its rated speed, rated voltage, rated current, rated torque and rated power, is in general the point where the electrical machine delivers its maximum torque and power, i.e. the point at n_o corner point in Figure 1 where $n_N = n_0$. The maximum operational speed can be higher than the rated speed and depending on the voltage frequency characteristics (see 4.3.7) the maximum operational voltage can exceed the rated voltage.

4.3.4 Limiting factors on torque/speed capability

The significant factors which influence the torque/speed capability are shown in Table 1.

Table 1 – Significant factors affecting torque/speed capability

Condition	Electrical machine	Converter
Breakaway	Maximum flux capability	Maximum current
Constant flux	Cooling (I^2R losses)	Maximum current
Field-weakening (reduced flux)	Maximum speed (mechanical strength and stability) Maximum torque (breakdown torque)	Maximum voltage
Dynamic response	Equivalent circuit parameters (determined by modelling)	Control capability

4.3.5 Safe operating speed, over-speed capability and over-speed test

For an electric~~al~~ machine, designed for converter application, the ~~electrical machine~~ capability of converter operation should be ~~defined by the manufacturer and should be given~~ indicated on the ~~rating plate~~ nameplate. For low voltage cage induction motors the safe operating speed is defined in IEC 60034-1:~~2010~~2022, 9.6.

For motors using hydrodynamics bearings, the minimum safe operating speed should keep a thick-film lubrication on bearing. Below this limit, a hydrostatic system will be necessary. Due to the number of interacting factors relevant for this effect, normally a case-by-case analysis is required, and the manufacturer should verify the practical limits.

The over-speed of AC electrical machines is defined in IEC 60034-1~~:2010~~, but an over-speed test is not normally considered necessary. The intention of a test, if specified and agreed, is to check the integrity of the rotor design with respect to centrifugal forces. Although for a fixed-speed electrical machine it is practically impossible to reach an operating speed above its synchronous speed, electrical generators can be accelerated above their synchronous speed by the turbine, for example in case of a sudden load rejection.

For converter-fed electrical machines, an acceleration to a speed higher than the maximum operational speed determined in the control of the converter is unlikely. Especially for large ‘super synchronous’ electrical machines, it is often beneficial to design an electrical machine for a maximum over-speed of 1,05 times the maximum operation speed. Test may also be performed at 1,05 times maximum operating speed. There is no technically justified argument against such agreement.

It should be appreciated that with high speed running fine balancing of the rotor may be required. If the high speed is required for more than short periods the bearing life may be reduced. Also, for high-speed applications, special attention should be paid to both the grease service life and the re-greasing interval.

4.3.6 Cooling arrangement

As Figure 1 indicates, the type of cooling influences the maximum torque/speed capability of PDS. Electrical machines with power ratings in the megawatt range often have a cooling

AVA Documents Document Sharing Hub

arrangement consisting of a primary cooling circuit (usually with air as primary coolant) and a secondary cooling circuit (with air or water as secondary coolant). The losses are transferred via a heat exchanger from the primary into the secondary circuit.

- Where both primary and secondary coolants are moved by a separate device, and their flow is thus independent of the electrical machine's rotor speed (for example, IC656 according to IEC 60034-6), the curve in Figure 1 for separate cooling applies.
- Where the secondary coolant is moved by a separate device and the primary coolant by a shaft-driven device (for example, IC81W or IC616), the curve in Figure 1 for self-cooling applies.
- Where both primary and secondary coolants are moved by a shaft driven device, the output torque should not exceed the curve $T/T_N = n^2/n_0^2$ and the minimum operational speed is recommended to be ≥ 70 % of rated speed.

4.3.7 Voltage/frequency characteristics

The relationship between the converter output voltage (U) and frequency can have several characteristics, as shown in Figure 3.

Documents
Document Sharing Hub

Full document details: IEC TS 60034-25 2022 CMV

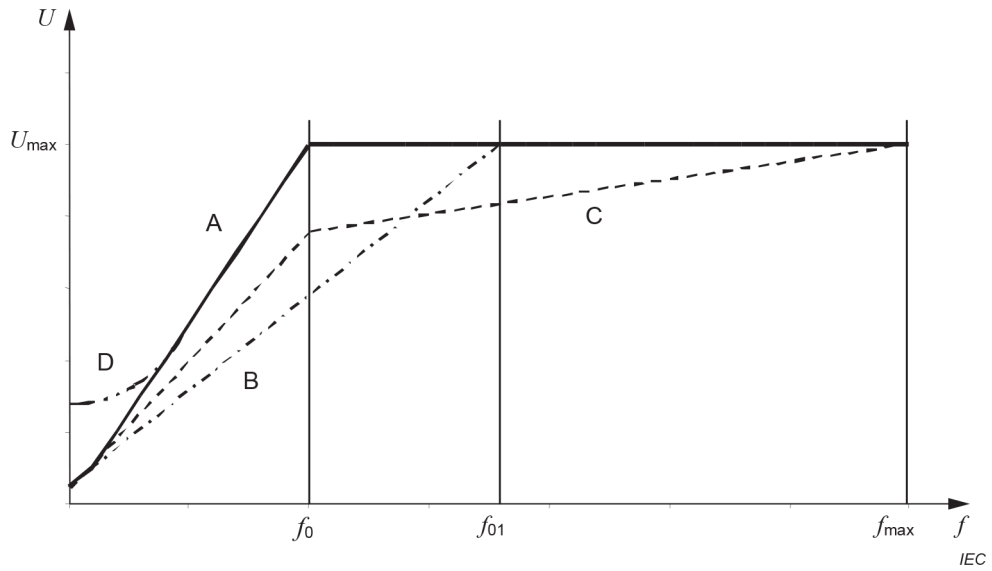

Key

A The voltage increases with frequency, and the maximum converter output voltage U_{max} is achieved at the field-weakening frequency f_0.

B The voltage increases with frequency, and the maximum converter output voltage U_{max} is achieved above f_0 at a new field-weakening frequency f_{01}. This provides an extended speed range at constant flux (constant torque), but the available torque in this speed range is less than that of case A.

C The voltage increases with frequency up to f_0, and then increases at a lower rate, the maximum converter output voltage U_{max} being achieved at f_{max}. This avoids excessive torque reduction in the constant flux range.

D A voltage boost is applied at very low frequencies to improve starting performance, and to prevent an unwanted increase in current.

In all these cases, the voltage/frequency dependence may be linear or non-linear, according to the torque-speed requirements of the load.

Figure 3 – Examples of possible converter output voltage/frequency characteristics

4.3.8 Resonant speed bands

The speed range of a converter-fed electrical machine may include speeds that can excite resonances in parts of the electrical machine stator, in the electrical machine/load shaft system or in the driven equipment. Depending on the converter, it may be possible to skip the resonant frequencies. However, even when resonant frequencies are skipped, the load will be accelerated through that speed if the electrical machine is set to run at any speed above this resonant speed. Decreasing the acceleration time can help minimize the time spent in resonance. The speed range shall be agreed with machine manufacturer.

4.3.9 Duty cycles

4.3.9.1 General

Cyclic duty applications are those in which transitions between speeds or loads are common (see IEC 60034-1). Several aspects of this type of application affect the electrical machine and the converter.

- Electrical machine heat dissipation is variable, depending on rotation speed and cooling method.

Documents
Document Sharing Hub
Full document details: IEC TS 60034-25 2022 CMV

- Torque demands above electrical machine full-load torque may be required. Operation above electrical machine full load torque may be required to accelerate, handle peak loads, and even decelerate the load. Operation above electrical machine rated current will increase electrical machine heating. This may require a higher thermal class of insulation, an electrical machine rated for the overload, or evaluation of the duty cycle to determine if the electrical machine has enough cooling for the application (see IEC 60034-1, duty type S10).
- DC injection, dynamic, or regenerative braking may be required to reduce the electrical machine speed. Regardless of whether the electrical machine is generating torque to drive the application, generating power back to the converter due to the electrical machine being driven by the load, or supplying braking torque during deceleration by applying d.c. current to the windings, electrical machine heating takes place approximately proportionally to the square of the current while applied. This heating should be included in the duty cycle analysis. Furthermore, the transient torques imposed on the shaft by braking should be controlled to a level that will not cause damage.

NOTE IEC TR 61800-6 provides information on load duty and current determination for the entire PDS.

4.3.9.2 High impact loads

High impact loads are a special case of duty and are encountered in certain intermittent torque applications (for example, IEC 60034-1, duty type S6). In these applications, the load is applied or removed from the electrical machine very quickly. It is also possible for this load torque to be positive (against the direction of rotation of the electrical machine) or negative (in the same direction as electrical machine rotation).

The impact load will result in a rapid increase or decrease in current demand (from the converter). If the torque is negative, the electrical machine may generate current back into the converter. These transient currents create stresses in the stator winding. The magnitude of these transient currents is a function of the size of the converter and of the electrical machine.

4.4 Electrical machine requirements

NOTE This subclause refers mainly to induction electrical machines, but some of the requirements may also be relevant for other electrical machine types.

Table 2 indicates some main individual aspects and design considerations.

Documents
Document Sharing Hub

Full document details: IEC TS 60034-25 2022 CMV

Table 2 – Electrical machine design considerations

Required aspect of application	Design consideration
Long-term operation at low speed	Thermal over sizing or ~~forced~~ independent cooling. For long-term operation of sleeve bearings below 10 % of corner point speed, the bearing performance should be confirmed by the manufacturer. Consideration should be given to the type of grease and greasing intervals.
Large ratio of speeds	Cooling independent of speed (separate fan, or other cooling medium, for example, water)
Speed feedback device	Precautions for mechanical interface. Speed sensor may need to be electrically insulated
High speed (field-weakening)	Mechanical aspects. High breakdown torque (i.e. small leakage reactance). U/f characteristic is constant until $f > f_0$ (see Figure 3)
Improved electrical machine efficiency with converter supply	Rotor cage designs (rotor bars with less skin effect are preferred, see 5.2). May adversely affect line starting capability
Line bypassing or line start capability	Rotor cage design shall be appropriate. Consequently the design may not be optimized to reduce losses and improve efficiency – balanced compromise necessary
High breakaway torque	If possible, increase flux by 10 % to 40 % (depending on electrical machine size) at near-zero frequencies
Voltage drop in the converter because of modulation or filter or cabling	Adaptation of the rated electrical machine voltage to compensate for the voltage drop, i.e. the rated voltage of the electrical machine can be lower than the supply voltage to the converter.
Multi-electrical machine operation at approximately synchronized common speed	Similar slip/torque characteristics of the electrical machines

In some applications, the electrical parameters of the electrical machine equivalent circuit (see Table 3 for examples) may be requested from the electrical machine designer for tuning the converter.

Documents
Document Sharing Hub
Full document details: IEC TS 60034-25 2022 CMV

Table 3 – Electrical machine parameters for the tuning of the converter

Parameter	Description/explanation	Scalar control	Vector or direct flux and torque control
Maximum values			
Maximum speed		Yes	Yes
Maximum temperatures of the stator and rotor windings		Yes	Yes
Acoustic parameters			
Frequencies which should be skipped by the converter, to avoid acoustic and electrical machine resonances		Yes, if discrete carrier frequencies occur	
Mechanical parameters			
Inertia	For high rates of acceleration	Optional	Optional
Coefficients k_1 and k_2 of friction and cooling fan torque demand ~~$(m = k_1 \times n + k_2 \times n^2)$~~ $(T = k_1 \times n + k_2 \times n^2)$	For some factory automation or production tasks, when accurate determination of mechanical output power is required	Optional	Optional
Electrical parameters of the T-equivalent circuit diagram for induction electrical machines			
Stator resistance (R_s)	At operating temperature	Optional for IR compensation	Yes
Rotor resistance (R'_r) (see NOTE 1)	At rated operating point and temperature, different from locked rotor condition	Optional for advanced scalar control	Yes
Stator leakage reactance $(X_{\sigma s})$	At corner point frequency	Optional for advanced scalar control	Yes
Rotor leakage reactance $(X'_{\sigma r})$ (see NOTE 1)	At rated operating point, different from locked-rotor condition	Optional for advanced scalar control	Yes
Magnetizing reactance (X_m)	At corner point frequency and rated operating point	Optional for advanced scalar control	Yes
Magnetizing conductance (G_m)	At corner point frequency and rated operating point	Optional for advanced scalar control	Yes
Magnetizing inductance as a function of voltage.	For field-weakening	Yes, for advanced scalar control	Yes
Lateral critical speed if below maximum operational speed	Speed to be avoided for continuous operation	Yes	Yes
Rotor skin effect, (e.g. ladder equivalent circuit)	For accurate determination of harmonic losses and temperature rise in applications where rapid current response and precise dynamic control is required	Optional	Optional
Stator skin effect		Optional	Optional
NOTE 1 The rotor electrical parameters R'_r and $X'_{\sigma r}$ are as referred to the stator circuit. NOTE 2 Some converters do not require motors resistance and reactance values for tuning purposes, as those determine required parameters by themselves.			

Consideration shall be given also to torsional critical speeds where continuous operation at these speeds shall also be avoided.

Documents
Document Sharing Hub
Full document details: IEC TS 60034-25 2022 CMV

For improved thermal modelling, or in applications where high torque with precise control is required at low speeds, it may also be useful for the electrical machine designer to supply data on the internal thermal capacitances and resistances of the component parts of the electrical machine. These parameters may be dependent on both rotational and switching frequency.

5 Losses and their effects (for induction electrical machines fed from voltage source converter*s*)

5.1 General

In the case of voltage source converter*s*, a knowledge of the electrical machine equivalent circuit is normally not important for the design of the commutating circuit, but the harmonic impedances of the electrical machine greatly influence the losses caused by harmonics. Voltage source converter*s* impress their output voltage on the associated electrical machines. The output voltage synthesizes a sinusoidal wave using quasi-rectangular voltage pulses, having steep slopes and approximately constant amplitude (two-level converter*s* impress a peak-to-peak value of the intermediate DC voltage).

In addition to the well-known losses due to fundamental voltage and current, the non-sinusoidal supply by a converter creates additional losses in the electrical machine. These additional losses depend on speed, voltage and current, the converter output voltage waveform, and the design and size of the electrical machine. If neither series inductances nor filters are provided, these losses can amount up to around 10 % to 30 % of the fundamental losses for two-level converter*s* and thus up to about 1 % to 2 % of the rated output of the electrical machine, decreasing with increasing electrical machine size. For three-level converter*s*, the additional losses due to converter supply are lower, typically 0,2 % to 1 % of rated output.

The magnitude and the characteristic behaviour of the additional losses due to converter supply depend on the design of the electrical machine, the type and parameters of the converter, and the use of filter circuits.

The total value of the additional losses caused by harmonics decrease with increasing switching frequency (see Figure 4). This effect is caused by the small additional winding losses at high switching frequencies.

See Annex A for converter types and characteristics.

Documents
Document Sharing Hub

Full document details: IEC TS 60034-25 2022 CMV

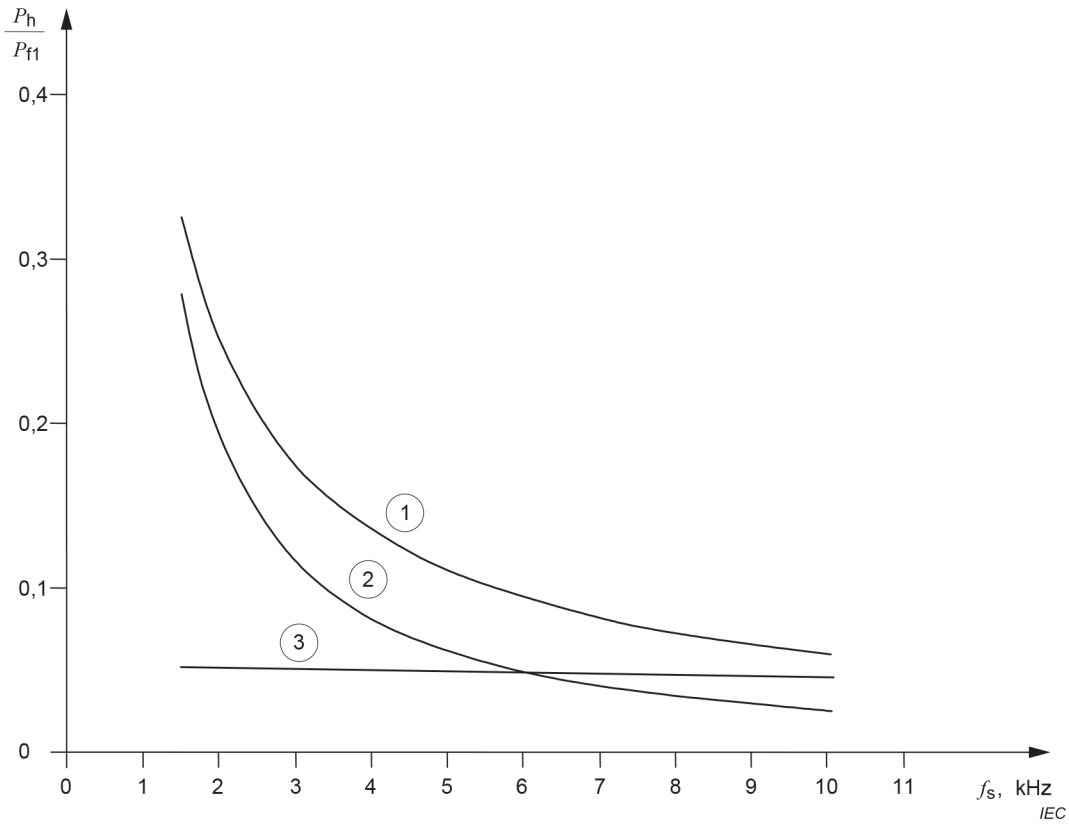

Key

1 Total harmonic losses

2 Harmonic winding losses

3 Harmonic iron losses

Figure 4 – Example for the dependence of the electrical machine losses caused by harmonics $P_{h,}$ related to the losses P_{f1} at operating frequency f_1, on the switching frequency f_s in case of 2 level voltage source converter supply

5.2 Location of the additional losses due to converter supply and ways to reduce them

For the converter output pulses the electrical machine appears as a frequency-dependent impedance. The losses of this impedance are mostly due to skin effect in the conductors (mainly the rotor bars, but in some cases also the stator conductors) and to eddy currents in the leakage flux paths (especially in the laminations).

The additional losses due to converter supply can be minimized by various design measures, **either internal or external to the motor,** for example:

- rotor winding design with less skin effect;
- stator winding design with less skin effect;
- open rotor slots;
- avoidance of short-circuits between the rotor laminations;
- thinner stator and rotor laminations, to reduce eddy-current losses;
- **and external to motor** reduced eddy current losses in series inductors or filters.

Documents
Document Sharing Hub
Full document details: IEC TS 60034-25 2022 CMV

5.3 Converter features to reduce the electrical machine losses

5.3.1 Reduction of fundamental losses

Figure 5 shows examples of the losses at no-load and at full-load for a 37 kW, 50 Hz electrical machine powered from sinusoidal and 5,5 kHz voltage source converter supplies. It can be seen that the additional losses due to PWM supply are small compared with the fundamental losses.

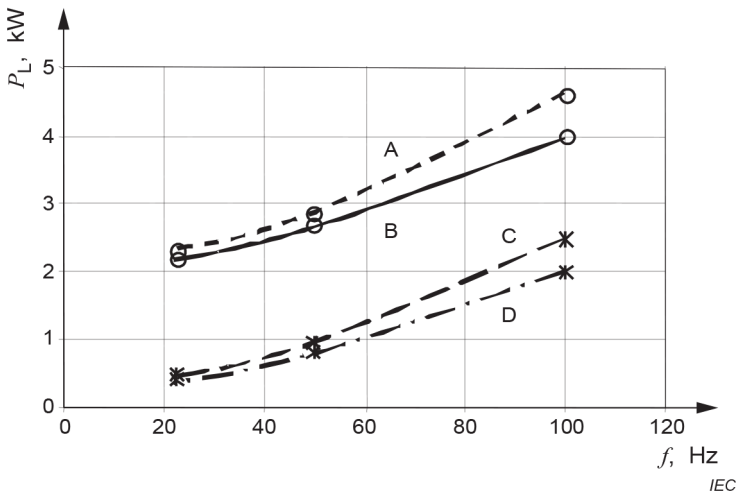

Key

A Full load, PWM supply
B Full-load, sinusoidal supply
C No load, PWM supply
D No load, sinusoidal supply

Figure 5 – Example of measured losses P_L as a function of frequency f and supply type

The most significant benefits of converter supply are achieved by optimizing the electrical machine flux depending on load (for example, reduction of flux at partial load) since this reduces the fundamental losses which are considerably higher than the additional losses. This “flux optimization” is frequently used in pump and fan applications for which the required torque is proportional to the square of the speed. At lower speeds the torque is considerably reduced and can therefore be created with lower flux and with lower losses in the electrical machine.

The same principle is used in the "constant power factor control" in applications where the load torque varies (not necessarily the speed) by adjusting the electrical machine flux according to the need so that the electrical machine current power factor stays at the optimum value.

The fundamental losses may also be reduced by variation of the intermediate DC voltage. Higher DC link voltage may also help to decrease over-modulation.

5.3.2 Reduction of additional losses due to converter supply

The additional losses due to converter supply may be reduced by reducing the harmonic content of the converter output voltage by, for example:

- optimizing the pulse patterns;
- increasing the switching frequency; typically, the additional losses due to converter supply in the electrical machine show a strong decline with increasing pulse frequency up to a few kHz (see Figure 6). However, the commutation losses in the converter increase with the pulse frequency (see Figure A.1) with the result that the sum of the losses has a minimum at a few kHz. For hysteresis or random PWM controlled converters, an average switching frequency applies which may also depend on voltage and current;
- multi-level converter configuration.

Documents
Document Sharing Hub
Full document details: IEC TS 60034-25 2022 CMV

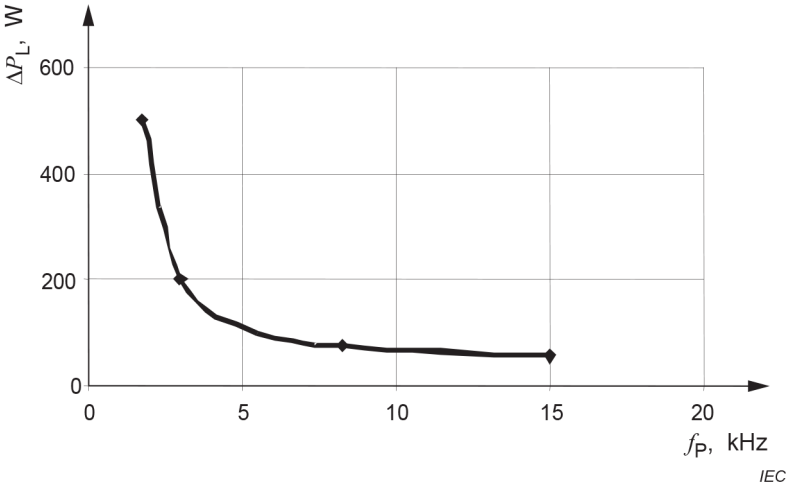

Figure 6 – Additional losses ΔP_L of an electrical machine (same electrical machine as Figure 5) due to converter supply, as a function of pulse frequency f_p, at 50 Hz rotational frequency

5.4 Use of filters to reduce additional electrical machine losses due to converter supply

Filters may be used at the output from a converter to reduce the amplitude and du/dt of the high-frequency switching voltage without excessively affecting the low-frequency resultant voltage appearing at the electrical machine terminals. The total effects will depend on the application and dimensioning of the electrical machine and the filter. The voltage drop across the filter will reduce the voltage at the electrical machine terminals, and this should be taken into account in order to avoid an increase in the fundamental current loss in the electrical machine. Also, there will be some losses in the filter, but these will generally be lower than the reduction of additional electrical machine losses due to converter supply, and so the overall efficiency of the PDS will improve.

In addition to reducing the additional electrical machine losses due to converter supply, such filters may also have a beneficial effect in reduced voltage stress on the electrical machine windings, decreased torque ripple, and improved EMC performance (see 9.2). However, there will be a slowing of the dynamic response of the PDS, and there may be other limitations due to the voltage drop across the filter.

5.5 Temperature influence on life expectancy

The sum of the fundamental and additional losses due to the load condition and the voltage waveform results in a temperature rise of the electrical machine windings. The temperature rise will also be affected by a change in cooling at the operating point within the specified speed range.

There are several ways to take this effect into account, for example:

- use of a separate cooling supply, such as IC0A6 or IC1A7 (see IEC 60034-6) for an air-cooled electrical machine;
- use of a higher thermal insulation class (see IEC 60034-1);
- full compensation for the intended operating ambient temperature (see IEC 60034-1);
- use of oversized electrical machine;
- optimization of converter output waveform.

NOTE Increased temperatures may affect not only the winding insulation ageing but also the bearing lubrication, and hence the bearing lifetime.

Documents
Document Sharing Hub
Full document details: IEC TS 60034-25 2022 CMV

The influence of variable load and speed on the winding temperature is characterized by the duty type as defined in IEC 60034-1. The most suitable duty types for converter-fed electrical machines are S1 and S10. Duty type S1 considers the maximum permitted temperature, whereas S10 (for operation at varying load and speed) permits temperature rises which exceed the limit values of the thermal class for limited periods. Limit values of temperature rise are given in IEC 60034-1:~~2010~~2022, and Annex A of that standard gives a formula for the ~~calculation~~ estimation of thermal life expectancy.

5.6 Determination of electrical machine efficiency

The recommended methods to determine the electrical machine efficiency on sinusoidal supply are given in IEC 60034-2-1 and IEC 60034-2-2, For voltage converter fed cage induction motors a new method to determine harmonic losses is described in IEC TS 60034-2-3.

If practical, if required to achieve a more accurate assessment of the overall losses (including the additional harmonic losses), they should be determined with the behaviour of the final PDS.

6 Acoustic noise, vibration and torsional oscillation

6.1 Acoustic noise

6.1.1 General

The converter and its function create three variables which directly affect emitted noise. They are:

- changes in rotational speed which may range from near zero speed to values in excess of the corner point speed. The components and factors that influence noise emissions are bearings and lubrication, ventilation and any other features that are affected by temperature changes;
- electrical machine power supply frequency and harmonic content which have a large effect on the magnetic noise excited in the stator core and, to a lesser extent, on the bearing noise;
- torsional and radial excitations of the stator core due to the interaction of waves of different frequencies of the magnetic field in the electrical machine air gap.

6.1.2 Changes in noise emission due to changes in speed

6.1.2.1 Sleeve (or plain) bearings

There will be no significant change in the noise level emitted by plain bearings.

6.1.2.2 Rolling element bearings

The fundamental frequencies of potential noise emission from a rolling element bearing will vary directly with the rotational speed. If the bearing is ”quiet” at the corner point speed, it is unlikely for the noise level to change significantly when the speed is reduced. However, when the speed is increased above the corner point speed there is the possibility that the noise level could increase dramatically due to harmonics of the fundamental frequencies growing due to skidding of the rolling elements. The susceptibility to this phenomenon has been shown to increase rapidly at speed factors (bearing diameter in mm × rotational speed in r/min) greater than 180 000. Experience has shown that the noise level increase can be countered by increasing the lubricant supply to the bearing by regreasing at very short intervals or by utilising oil bath or oil mist lubrication.

When operating at the highest speeds in the electrical machine’s range, the bearing temperature will be higher than running at lower speeds. It is important therefore to ensure that adequate nominal clearance and/or a spring-loaded arrangement is embodied in the design.

Grease lubricated bearings will perform perfectly satisfactorily at low operating speeds.

AVA Documents
Document Sharing Hub
Full document details: IEC TS 60034-25 2022 CMV

6.1.2.3 Ventilation noise

For a shaft-mounted fan, the noise generated will vary approximately as the characteristic shown in Figure 7 (for a fan peripheral velocity up to 50 m/s). The fan noise S(dB) will decrease per the following formula $\Delta S(\text{dB}) = 50.\log_{10}(R)$ or by about 15 dB for a 50 % reduction in speed and increase by about ~~10~~ 9 dB for a speed increase of 50 %. If the drive is unidirectional, very effective noise reduction can be achieved by utilising a fan on the electrical machine with ~~curved~~ unidirectional ~~blades~~ fan (axial or centrifugal).

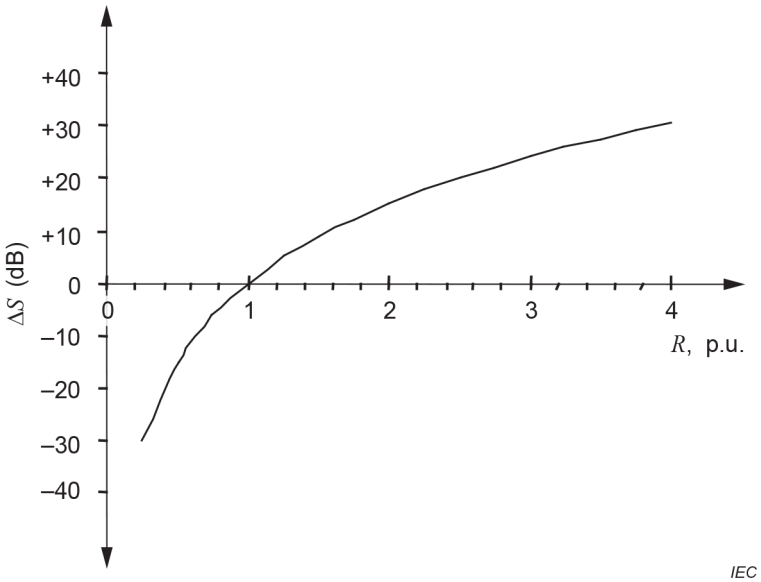

Key

ΔS Change in sound pressure

$\Delta S(\text{dB}) = 50.\log_{10}(R)$

R ~~Relative~~ Fan speed p.u.

Figure 7 – Relative fan noise as a function of fan speed

6.1.3 Magnetically excited noise

Magnetic noise is essentially caused by waves of tensile stress acting in the radial direction on the stator ~~bore~~ core at the air gap. These so-called Maxwell forces are excited by the interaction of the various magnetic fields in the air-gap. The tensile stress is characterized by its amplitude, frequency and mode. As the amplitudes are small, the tensile stress results in disturbing tones only when frequency and mode of a specific wave coincides with the frequency and mode of a natural frequency of the stator core.

In the case of sinusoidal supply voltages, the magnetic noise is caused by the spatial harmonics of the air-gap field. The aim of a professional design is to avoid resonances at the rated operating conditions of the electrical machine. But, because of the large variety of contributing spatial harmonic fields, audible magnetic noise is unavoidable at specific speeds, when the electrical machine is operated at constant flux over a wide speed setting range, even when the supply voltage is sinusoidal. Skipping of a small frequency band is frequently used to avoid a too high noise emission at the associated speed. This means this effect is not associated with the converter supply and would also occur in case of variable-frequency sinusoidal supply voltages.

Documents
Document Sharing Hub
Full document details: IEC TS 60034-25 2022 CMV

The statements given above are valid also when an electrical machine is supplied from a converter. But, in this case, the magnetic fields produced by the time harmonics are superimposed. With respect to considerable magnetic noise, it is sufficient to consider the interaction of the fundamental air-gap fields (number of pole pairs p) of the operating frequency and the different harmonics. Therefore, the additionally generated waves of tensile stress are of the modes r = 0 and r = 2p. The natural frequencies of these modes depend on the size and the design of the electrical machine

The objective of PDS designers is to create optimum noise solutions, but it should be recognized that such solutions are not the responsibility of either the converter designer or the electrical machine designer alone and that in many cases design co-operation is essential.

Experience has shown that with pulse frequencies less than 3 kHz, the harmonic frequencies can be close to the natural frequencies of the electrical machine core and structure on medium and large electrical machines and consequently with wide speed range applications, resonance points are nearly unavoidable at some point in the speed range (see Figure A.2). The resonance frequencies for the modes r = 0 and r = 2p (see Figure 8 for illustrations of modes r = 0, 2 and 4) are less than 2,5 kHz for 2-pole and 4-pole electrical machines with shaft height greater than 315 mm. By contrast, the trend to increase the converter pulse frequency to 4 kHz or 5 kHz or even higher will result in possible resonance occurring on progressively smaller electrical machines.

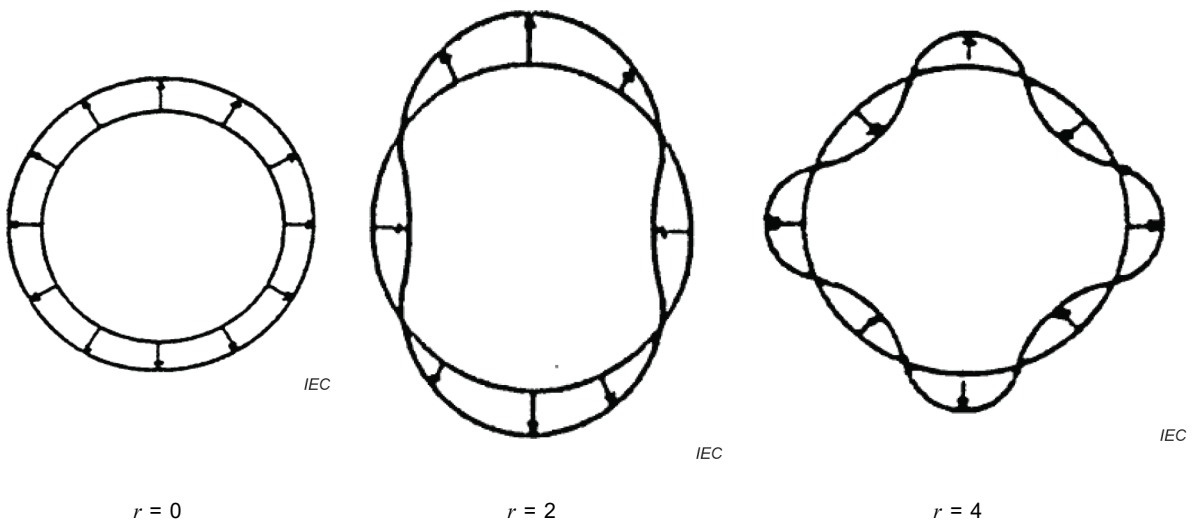

Figure 8 – Vibration modes of the stator core

The increment of noise of electrical machines supplied from PWM controlled converters compared with the same electrical machine supplied from a sinusoidal supply is relatively small (a few dB(A) only) when the switching frequency is above about 3 kHz. For lower switching frequencies, the noise increase may be tremendous (up to 15 dB(A) by experience). Some advanced PWM or hysteresis-controlled converters no longer use fixed carrier frequencies and therefore produce a widely spread spectrum of non-fundamental frequencies. Thus, the typical noise increase and the subjective audible noise can be drastically reduced.

It may be necessary to create" skip bands" in the operating speed range in order to avoid resonance conditions.

For an indication of the noise increase when operated on a converter see IEC 60034-9:~~2007~~2021, ~~Clause 7~~ Annex B (informative).

Documents
Document Sharing Hub
Full document details: IEC TS 60034-25 2022 CMV

6.1.4 Sound power level determination and limits

6.1.4.1 Methods of measurement

Sound power levels should be determined in accordance with IEC 60034-9~~ (see 6.1.4.2)~~.

6.1.4.2 Test conditions

If practical the electrical machine should be rigidly mounted and, tests should be made with the electrical machine supplied from a converter with the output characteristics that will be used in the application.

Alternatively, and preferably for larger electrical machines, tests may be carried out at no load and rated frequency, using a sinusoidal supply.

6.1.4.3 Sound power level limits

Sound power level limits are specified in IEC 60034-9:~~2007~~2021~~, Clause 7~~. Table B.2 of that standard shows, as information, the typical expected increments of the sound power level of converter-fed electrical machines compared with sinusoidal supply.

6.2 Vibration (excluding torsional oscillation)

6.2.1 General

The level of vibration produced by a converter-fed electrical machine will be influenced by the following factors:

- the electromagnetic design of the electrical machine;
- the electrical machine structure, particularly the frame assembly;
- the electrical machine mounting;
- shaft stiffness;
- the rigidity of the coupling between the electrical machine shaft and the driven equipment;
- the output waveform of the converter.

Provided that the converter has suitable output characteristics and also that due attention is paid to the mechanical features of the electrical machine and its mounting, similar vibration levels to that produced by an electrical machine operating on a sinusoidal supply will be obtained. Thus, for electrical machines supplied from PWM voltage source converters, there is no need to establish vibration levels that are different from the figures for sinusoidal supplied electrical machines given in IEC 60034-14.

IEC 60034-14 gives test vibration limits for electrical machines when they are either freely suspended or rigidly mounted. The measured test figures give the vibration level produced by an uncoupled electrical machine under specific mounting conditions and as such are an indication of the quality of the electrical machine. When an electrical machine is mounted in an apparatus or at a site coupled to driven equipment, it is expected that the vibration level will be ~~very~~ different.

For an electrical machine coupled to a driven equipment there are many natural resonances and if the application requires the electrical machine to operate over a wide speed range it can be extremely difficult to avoid all of them. If problems are experienced, it is sometimes possible to program the controller so that the frequency bands that are exciting the mechanical resonances are “skipped” (see 4.3.8).

It will be appreciated that as many of the factors influencing the level of vibration are due to the total system, it is not possible to address all vibration problems by considering the design of the electrical machine on its own.

AVA Documents
Document Sharing Hub
Full document details: IEC TS 60034-25 2022 CMV

6.2.2 Vibration level determination and limits

6.2.2.1 Method of measurement

Vibration levels should be determined in accordance with IEC 60034-14 (see 6.2.2.2).

6.2.2.2 Test conditions

If practical the electrical machine should be rigidly mounted and, tests should be made with the electrical machine supplied from a converter with the output characteristics that will be used in the application.

Alternatively, by agreement between manufacturer and customer, tests may be carried out at no load and rated frequency, using a sinusoidal supply.

NOTE 1 This recommendation can significantly increase the test time and is not ~~required by~~ necessary per IEC 60034-14.

NOTE 2 For *in situ* measurements, refer to ISO 10816-3.

6.2.2.3 Vibration level limits

When testing under the conditions specified in 6.2.2.2, it is recommended that the vibration magnitude measured on the bearing housings should not exceed the vibration level Grade A, given in IEC 60034-14~~:2007~~.

6.3 Torsional oscillation

The asynchronous (time-constant) torques generated by harmonics have little effect on the operation of the drive. However, this does not apply to the oscillating torques which are generated in the shaft of electrical machines supplied from converter*s*. The magnitude of the torque ripple and its frequency are such that they can produce torque vibrations in the complete connected mechanical system which should be carefully checked in order to avoid damaging mechanical resonances.

In drives with pulse-controlled converter*s*, the frequencies of the dominant oscillating torques are determined by the switching frequency while their amplitudes depend on the pulse width. Thus, the oscillating torque amplitudes may be as high as 15 %, of the rated torque provided that the switching frequency exceeds 10 times the corner point frequency, which is usually the case. With higher switching frequencies (in the order of 21 × f_1) the oscillating torques of frequencies 6 × f_1 and 12 × f_1 are practically negligible, provided a suitable pulse pattern is applied (e.g. modulation with a sinusoidal reference wave or space-phasor modulation). Additionally, oscillating torques of twice the switching frequency are generated. These, however, do not exert detrimental effects on the drive system since their frequency is far above the critical mechanical frequencies.

A DC component, or a negative-sequence component produced by asymmetries of the converter output voltage will generate a torque component of 1- or 2-times fundamental supply frequency and should therefore be carefully prevented. It should be borne in mind that, for DC, only the resistance, and, for negative sequence, a short-circuit impedance, are effective, and therefore small asymmetrical voltages will produce rather high asymmetrical currents and thus oscillating torques, especially when meeting a resonance frequency of the shaft train. Oscillating torques will lead to damage due to clearances in gear sets, couplings or some shaft connections if the torque transmitting surface is able to disconnect and afterwards to "hammer" back.

Documents
Document Sharing Hub
Full document details: IEC TS 60034-25 2022 CMV

7 Electrical machine insulation electrical stresses

7.1 General

The insulation system of the electrical machine is subjected to higher dielectric stress when converter-fed than in the case of a pure AC sinusoidal source.

7.2 Causes

A voltage source converter generates rectangular pulses of fixed amplitude voltage that have varying width and frequency. The amplitude voltage of the pulses at the output of the converter is generally determined by DC bus voltage (1 p.u.) but the superposition of common-mode and differential mode transient effects throughout the whole topologies of power supply system, converter system plus the auxiliaries like earthing conditions, cabling and filtering have to be clearly analysed and taken into account (see IEC TS 61800-8). Modern low voltage converter output voltage rise-times may be in the ~~50~~ 20 ns to 400 ns range. They are kept as short as possible to minimize switching losses in the output semiconductors. These converter*s* can generate repetitive voltage overshoots at the terminals of an electrical machine connected by a cable, which can reduce the life of an electrical machine insulation system if they exceed its repetitive voltage strength. Figure 9 shows a plot of the surge count at the terminals of an electrical machine fed from a converter, measured over a period of time under various operating conditions. As can be seen, there is not a simple relationship between the surge count and the rise-time and magnitude. However, the risk of insulation damage (due to partial discharge, see 7.3 and 7.6) is more severe with surges of fast rise-time and high voltage, which indicates that surges in the upper right-hand portion of this diagram, when viewed from the t_r scale direction are more significant.

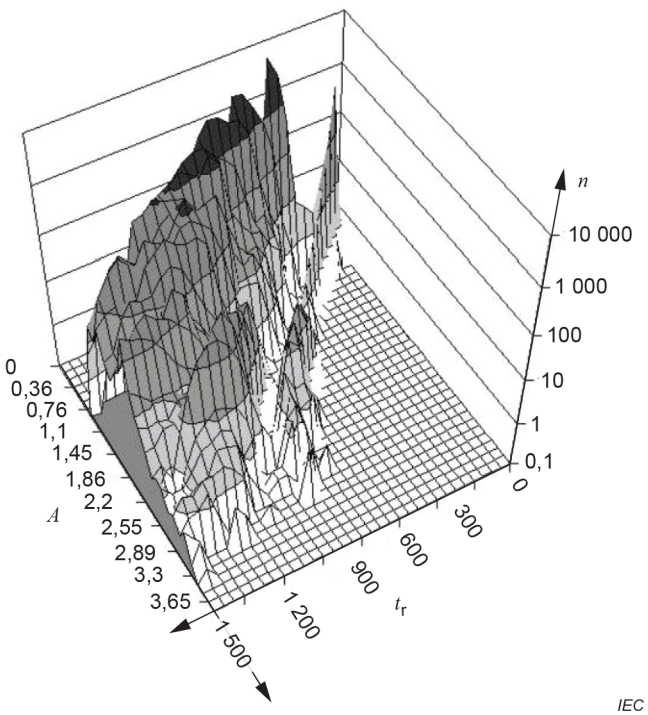

Key

A Surge magnitude (p.u.) t_r Rise-time (ns) n Surge count (per second)

Figure 9 – Typical surges at the terminals of an electrical machine fed from a PWM converter

Documents
Document Sharing Hub
Full document details: IEC TS 60034-25 2022 CMV

Depending on the rise-time of the voltage pulse at the converter output, and on the cable length and electrical machine impedance, the pulses generate voltage overshoots at the electrical machine terminals (~~typically~~ up to 2 p.u. phase-to-phase and phase-to-ground for each polarity). These voltage overshoots are created by reflected waves at the interface between cable and electrical machine terminals due to impedance mismatch, and depend on the converter output, the cable length between the converter and the electrical machine and electrical machine terminal impedance. This phenomenon is fully explained by transmission-line and travelling wave theory, using the harmonic content of the output voltage. As the rise-time decreases, so the harmonic frequencies present in the voltage waveform will increase. Typical voltage surges measured at a converter output and at the electrical machine terminals are given in Figure 10 with an enlarged view of one surge shown in Figure 11. For support of a comprehensive analysis consult IEC TS 61800-8.

It is recommended that the system integrator of converter and electrical machine should measure the phase-to-ground and phase-to-phase voltage at the electrical machine terminals after system installation in order to confirm the expectation, because the actual magnitude and rise-time are complicated as shown in Figure 9. If the actual surge voltage is more severe than the expectation, the system integrator should take countermeasures following 7.5 in order to avoid unexpected system faults in service.

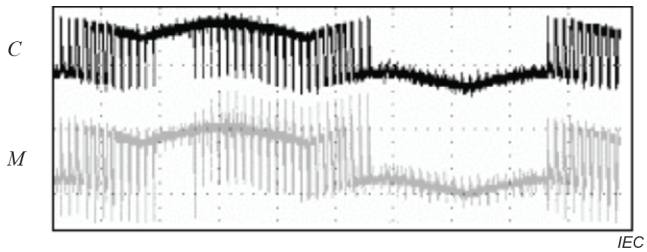

Key

C Phase voltage at converter

M Phase voltage at electrical machine

Figure 10 – Typical voltage surges on one phase at the converter and at the electrical machine terminals (2 ms/division)

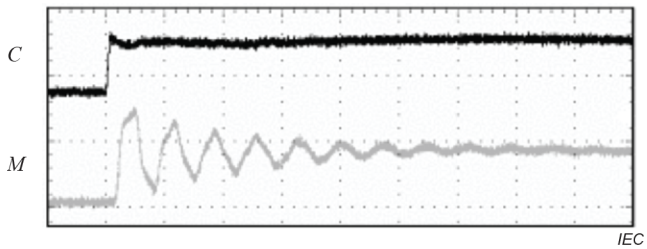

Key

C Phase voltage at converter

M Phase voltage at electrical machine

Figure 11 – Individual short rise-time surge from Figure 10 (1 µs/division)

Experience indicates that as the cable length increases, the pulse overshoot generally may increase to a maximum then may decline. Meanwhile, the rise-time at the electrical machine terminals increases. Voltage overshoots might be decreased in the case of installations using converter*s* installed close to associated electrical machines, where the cable length between converter and electrical machine is short.

Documents
Document Sharing Hub
Full document details: IEC TS 60034-25 2022 CMV

7.3 Winding electrical stress

The dielectric stress of the winding insulation is determined by the peak to peak voltage and the rise-time (for definition, see Figure 12) of the impulse at the electrical machine terminals, and on the frequency of the impulses produced by the converter.

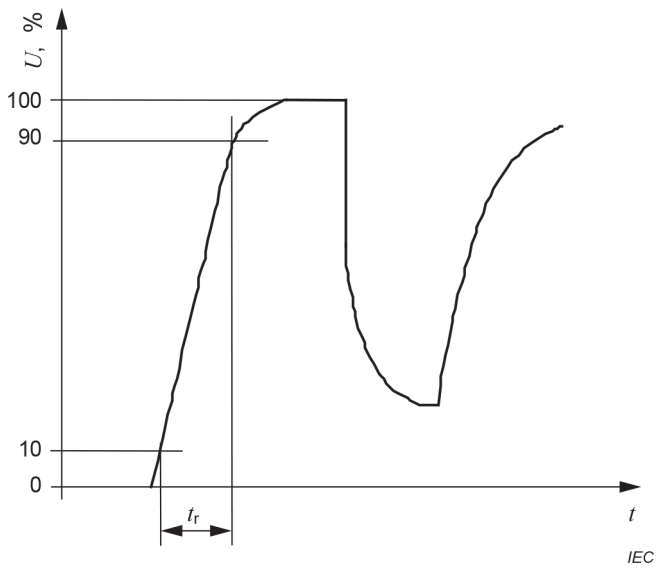

Figure 12 – Definition of the rise-time t_r of the voltage pulse at the electrical machine terminals

One part of the stress is determined by the level of voltage applied to the main insulation (phase-to-phase or phase-to-ground) of the winding coils. The other is limited by the inter-turn insulation and determined by the rise-time of the impulses. Short rise-time impulses result in the voltage being unevenly distributed throughout the coils, with high levels of stress present between turns at the line end coil(s) of the individual phase winding.

~~Figure 7 of IEC 60034-18-41:2014 which is reproduced here as~~ Figure 13 shows the worst-case distribution of the voltage across possibly adjacent first and last turns of a random-wound winding as a function of the rise-time.

If not known better, this can be considered as the expected worst-case voltage stressing the turn-turn-insulation of the electrical machine.

As illustrated, the shorter the rise-time, the more voltage appears across the first turn of the coil.

Documents
Document Sharing Hub
Full document details: IEC TS 60034-25 2022 CMV

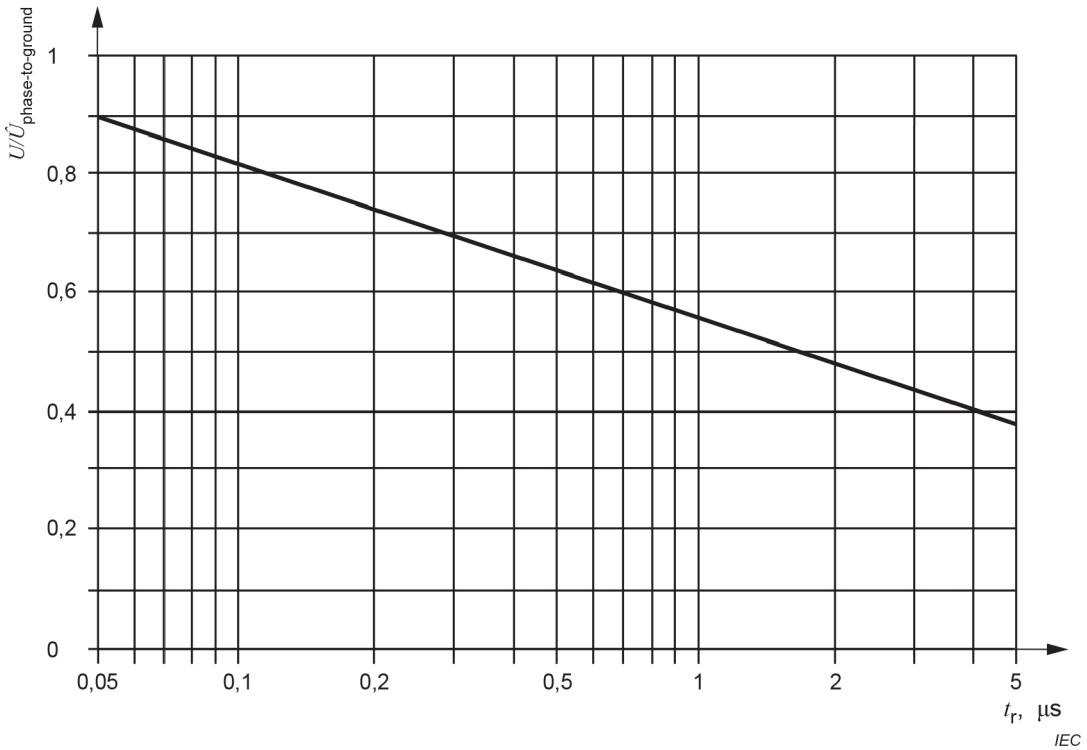

Key

~~A~~$U/\hat{U}_{phase\text{-}to\text{-}ground}$ fraction of jump phase-to-ground voltage t_r rise-time

Figure 13 – First turn voltage as a function of the rise-time

Short rise-time impulses at electrical machine terminals also cause high turn-to-turn voltages in the first coil(s) of each winding phase and can be followed by early dielectric breakdown turn-to-turn. ~~Such occurrences are often~~ This can be due to inadequate dielectric strength of the enamel coating, inadequate resin fill. However, field experience has shown, that in most cases no dielectric breakdown occurs, because the probability of critical turns to be located close to each other is rather low when the recommended IVIC are met.

7.4 Limits and responsibility

7.4.1 Electrical machines design for low voltage (≤ 1 000 V)

The insulation system of electrical machines rated at less than 1 000 V specifically designed for supply from voltage source converters may be qualified according to 60034-18-41 (without Partial Discharge Type I) or 60034-18-42 (with Partial Discharge Type II), possibly indicating this in the documentation and on the name plate of the electrical machine. It is the responsibility of the electrical machine manufacturer to ~~specify~~ document on the nameplate or provided machine documentation the ability of the electrical machine winding insulation. Assigning an IVIC will affect the withstand voltage test in IEC 60034-1.

For general purpose PDS applications it is recommended that the electrical machine should follow the impulse voltage insulation class C/B, Table 4~~, extracted from Table C.1 of IEC 60034-18-41:2014~~. Electrical machine manufacturer should ensure that the electrical machine complies with these levels, i.e. the values in Table 4~~ (Annex C of IEC 60034-18-41:2014)~~.

Higher and lower values as well as different combinations of P-P, P-G, T-T Classes for specific applications are given in IEC 60034-18-41~~:2014~~, in order to adapt electrical machine insulation abilities to system requirements economically and reliably.

Documents
Document Sharing Hub
Full document details: IEC TS 60034-25 2022 CMV

Ensuring that no significant service lifetime reduction of the electrical machine insulation occurs, the actual stress due to converter operation should be lower than the Impulse voltage insulation class (IVIC) for Type I Insulations according to IEC 60034-18-41 and the voltages per Type II Insulations according to IEC 60034-18-42 ~~(the next edition of IEC 60034-18-42 is intended to have IVIC as well)~~.

It should be known that dependent on the PDS topology significantly higher voltages could occur. The actual voltage stress to be expected can be determined according to IEC TS 61800-8, taking into account possible voltage reflection depending on the topology and operating mode of the converter, cable type and length, earthing, etc. Relevant parameters for insulation stress are: transient peak to peak voltage values, rise-time, repetition rate, etc.

The system integrator is responsible for determining and specifying the voltage stress level at the electrical machine terminals (see Annex C for an example of the calculation of these voltage stress levels).

In case the actual or expected levels at the electrical machine terminals are higher than those given in the impulse insulation class defined in Table 4 either the PDS topology or the electrical machine insulation shall be adapted. The maximum levels defined in Table 4 covers a sufficient number of typical applications, but it is possible that levels exceed this and the capability of the motor insulation system. It is the responsibility of the system integrator to make system changes or to communicate the special requirements to the electrical machine or converter manufacturer. Methods of insulation stress reduction are given in 7.5.

Table 4 – Operating voltage at the terminals in units of U_N where the electrical machines may operate reliably without special agreements between manufacturers and system integrators

Impulse voltage insulation class	Allowable peak/peak operating voltages in units of U_N	
	Phase/phase C	Phase/ground B
IVIC C/B	5,9	3,1

~~(See IEC 60034-18-41:2014, Annex C for details)~~

~~NOTE 1 Electrical machine manufacturer should ensure that the electrical machine complies with these levels.~~

NOTE ~~2~~ Special agreements between manufacturers and system integrators might be subject to a dedicated installation.

7.4.2 Electrical machines designed for medium and high voltage (> 1 000 V)

The insulation system of electrical machines rated at greater than 1 000 V specifically designed for supply from voltage source converter*s* may be qualified according to IEC 60034-18-42 (with Partial Discharge Type II), possibly indicating this in the documentation and on the name plate of the electrical machine. It is the responsibility of the electrical machine manufacturer to specify the ability of the electrical machine winding insulation. Assigning an IVIC may affect the withstand voltage test in IEC 60034-1. Since drive topologies will vary greatly, and these larger motors are mostly custom designed as needed, assigning default IVIC levels is not practical. The end user or system integrator shall work with the converter and motor manufacturer to ensure compatibility. If the drive topology and system are known, IEC TS 61800-8 can be an indication of the peak voltage seen at the at the motor terminals and therefore the motor's needed IVIC.

~~Until the next edition of IEC 60034-18-42 is issued, in order to ensure that no significant service lifetime reduction of the electrical machine insulation occurs, the actual stress due to converter operation should be lower than the maximum allowed stress limits declared by the machine manufacturer.~~

AVA Documents
Document Sharing Hub

Full document details: IEC TS 60034-25 2022 CMV

7.5 Methods of reduction of voltage stress

There are several possible solutions for reducing the surge severity in a given situation. These can be judged when viewing the complete PDS. Most of the influencing aspects can be calculated by following IEC TS 61800-8. Annex C gives an example of how simple it is to use IEC TS 61800-8.

7.6 Insulation stress limitation

The upper limited level at which this over-voltage stress becomes harmful is the PDIV (the voltage at which partial discharges begin to occur) or, in the air, the Corona Inception Voltage (CIV). Partial discharges may cause degradation of the insulation system through both chemical and mechanical erosion. The rate of insulation degradation depends on the energy and frequency of occurrence of the partial discharges.

PDIV and CIV in an electrical machine are influenced by:

- winding type: random or form-wound;
- design: phase separation and ground wall material;
- varnish type and impregnation technology;
- wire size: larger diameter wire has a higher PDIV;
- wire insulation type;
- enamel thickness: thicker enamel coating of wire increases PDIV;
- operating temperature: when the winding temperature increases, PDIV decreases (typically by 30 % from 25 °C to 155 °C); this is true only partially and in general not for form wound electrical machine windings;
- environment atmosphere (composition and pressure);
- condition of the insulation (contamination by dirt or humidity, etc.).

Figure 14 shows a partial discharge pulse that has resulted from a surge on one phase of a converter-fed electrical machine.

NOTE The discharge occurs at the rising edge of a converter generated voltage surge, as the voltage stress across a void in the insulation reaches its breakdown strength.

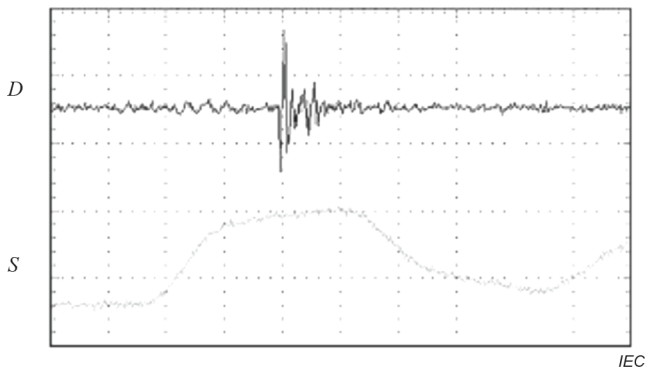

Key

S Voltage surge at electrical machine terminals

D Discharge pulse

Figure 14 – Discharge pulse occurring as a result of converter generated voltage surge at electrical machine terminals (100 ns/division)

Documents
Document Sharing Hub
Full document details: IEC TS 60034-25 2022 CMV

8 Bearing currents 4

8.1 Sources of bearing currents in converter-fed electrical ~~machines~~ motors

8.1.1 General

Several situations can cause bearing currents. ~~In all cases, bearing current will flow when a voltage is developed across the bearing sufficient to break down the insulating capacity of the lubricant. There are several sources of this voltage.~~ Bearings within electric motors as well as the driven load could be affected. The resulting material alternations at the raceways of the bearings in the form of corrugated patterns lead to an early and unplanned shutdown of the drive system. The classification of the different bearing current types is shown in Figure 15.

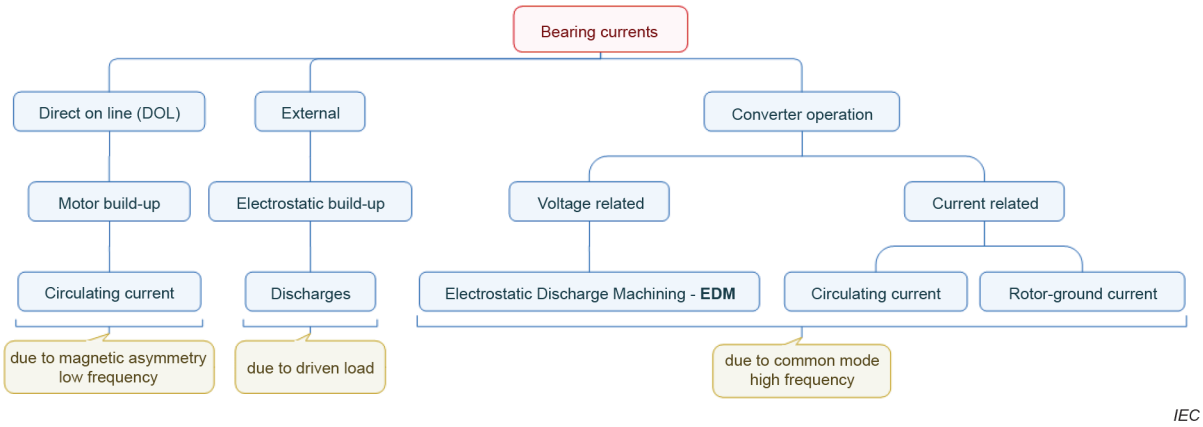

Figure 15 – Classification of bearing currents

NOTE Also auxiliary devices such as encoders or tachometers as per 9.1.4.4 which are connected to the electrical ~~machine~~ motor can be affected by bearing currents.

8.1.2 Circulating currents due to magnetic asymmetry

Asymmetry in the magnetic circuit of an electrical ~~machine~~ motor creates a situation that causes low frequency bearing currents. This is more common in electrical ~~machines~~ motors greater than 400 kW but can exist in small electrical ~~machines~~ motors with magnetic asymmetries, as well, such as those with a segmented construction. An asymmetric magnetic circuit results in a circumferential a.c. flux (ring flux) in the yoke. This induces an AC voltage in the conductive loop comprising the electrical ~~machine~~ motor shaft, the bearings, the end brackets, and the outer frame of the electrical ~~machine~~ motor. If the induced voltage is sufficient to break down the insulation provided by the lubricant, current will flow through the loop, including both bearings. This kind of bearing currents mainly appears in direct on-line operating motors systems

8.1.3 Electrostatic build-up

The voltage can also be caused by an electrostatic build up on the shaft due to the driven load such as an ionized filter fan.

8.1.4 High-frequency ~~voltages~~ effects in converter operation

~~The high-frequency common-mode voltage at the electrical machine terminals generates common-mode currents, part of which may flow through the bearings of the electrical machine or of the driven equipment. The common-mode currents may also generate a voltage across the bearings by transformer action. These effects result from the use of fast switching semiconductor devices, and can cause bearing problems, due to different effects, in electrical machines of all ratings. These effects are described in detail in 8.2.~~

Documents
Document Sharing Hub
Full document details: IEC TS 60034-25 2022 CMV

The converter transforms the input voltage from the supply, which is, as a first approximation, constant in amplitude and frequency, into a variable voltage in frequency and amplitude. For that purpose, a rectifier unit is feeding a DC voltage link, in which DC link capacitors act as voltage smoothers and energy storage. The subsequent inverter transforms the DC link voltage with the procedure of pulse-width modulation into a variable AC voltage. In this way, the connected electrical motor can be controlled in terms of speed and torque.

Regarding to the characteristics of inverter-related bearing currents, the high-frequency properties of the earthing system are of particular importance. Due to the use of fast switching semiconductors, which are operated at high switching frequencies, the inverter shall be assigned the role of an interference source within a Power Drive System – in sense of EMC. The interference sinks are the subsequent electro-mechanical components such as the electric motor, gear unit and driven machine, via which the conducted, asymmetrical interference currents flow. These cause additional, high-frequency voltage drops at the components of the drive system. Due to the respective parasitic conditions, each component of the system has a corresponding impedance to earth at which additional voltages drop. In Figure 16 these are marked u_{G0} to u_{G4}.

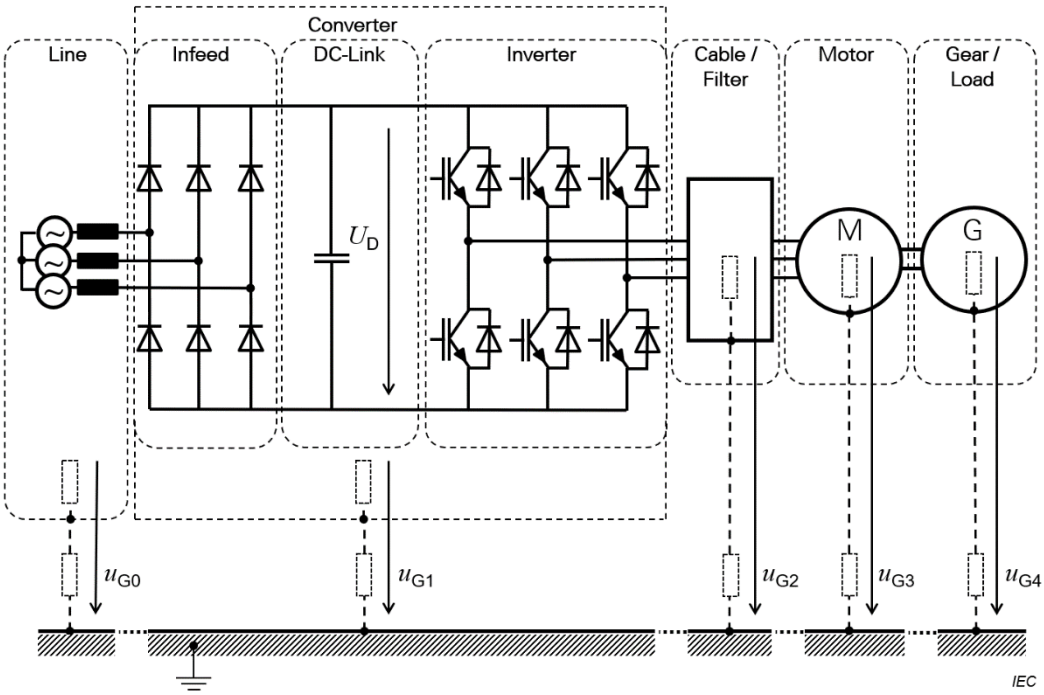

Figure 16 – Parasitic impedances to earth of drive system components

Based on the typical output voltage waveform of VSI converters, the mechanisms can be divided into three types of bearing currents: EDM, circulating and rotor ground currents. Due to the underlying mechanisms, these can be divided into two main groups: the current related and the voltage related bearing currents. Within the former group the bearing currents are caused by the high-frequency components of the common-mode current (circulating and rotor ground currents) while for the latter group these are generated due to the inherent common-mode voltage (EDM currents). The classification of the aforementioned bearing current types is depicted in Figure 15.

8.2 Generation of high-frequency bearing currents

~~8.2.1 General~~

~~The most important factors that define which mechanism is prominent are the size of the electrical machine and how the electrical machine's frame and shaft are grounded. The electrical installation, meaning a suitable cable type and proper bonding of the earthing~~

Documents
Document Sharing Hub

~~conductors and the electrical shield, also plays an important role, as well as the rated converter input voltage and the rate of rise of the converter output voltage. The source of bearing currents is the voltage across the bearing. There are three types of high frequency bearing currents: circulating, shaft earthing, and capacitive discharge.~~

~~Two types of bearing currents, high-frequency circulating current (I_C) and shaft earthing current (I_S), are shown schematically in Figure 15. These are strongly influenced by the earthing arrangements and earthing impedances.~~

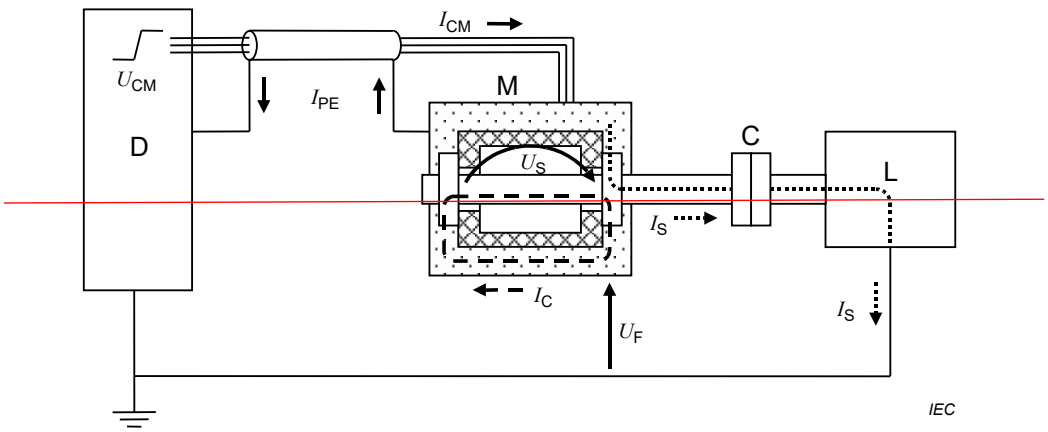

~~Key~~

~~D Converter~~ ~~M Electrical machine~~ ~~C Shaft coupling~~ ~~L Driven load~~

~~U_{CM} HF common-mode voltage~~

- ~~I_{CM} HF common-mode current~~
- ~~U_S HF shaft voltage~~
- ~~I_C HF circulating current~~
- ~~I_{PE} HF return current~~
- ~~U_F HF frame voltage~~
- ~~I_S HF shaft current~~

~~**Figure 15 – Possible bearing currents**~~

~~8.2.2 Circulating current~~

~~In large electrical machines, a high-frequency voltage is induced in the closed loop as described in 8.1.2 by the high-frequency flux circulating around the stator yoke. This flux is caused by capacitive currents leaking from the winding into the stator laminations. The induced shaft voltage may affect the bearings. If it is high enough to overcome the insulation of the bearings' lubricant film, a compensating current to balance the flux in the stator flows, looping the shaft, the bearing and the stator frame.~~

~~These high-frequency currents may be superimposed on low-frequency currents generated as described in 8.1.2.~~

~~8.2.3 Shaft earthing current~~

~~The current leaking into the stator frame needs to flow back to the converter, which is the source of the current. Any route back contains impedance, and therefore, the voltage of the electrical machine frame increases in comparison to the source ground level. If the electrical machine shaft is earth grounded via the driven machinery, the increase of the electrical machine frame voltage is seen across the bearings. If the voltage rises high enough to overcome the insulating capability of the bearing lubricant film, part of the current may flow via that bearing, the shaft and driven electrical machine back to the converter.~~

Documents
Document Sharing Hub
Full document details: IEC TS 60034-25 2022 CMV

~~**8.2.4 Capacitive discharge current**~~

~~The internal voltage division of the common-mode voltage over the internal capacitances of the electrical machine may cause bearing voltages high enough to breakdown the insulation of bearing lubrication film, creating high frequency bearing current pulses (referred to as electrostatic discharge machining currents). This can happen if the shaft is not grounded via the driven machinery while the electrical machine frame is tied to ground for protection.~~

8.2.1 Common mode voltage

A significant side effect in the operation of voltage source inverters (VSI) is the inherent occurrence of a common mode voltage. Since only discrete voltages and switching states are available in a VSI, the sum of the generated phase voltages (u_{RG}, u_{SG}, u_{TG}) is usually non-zero – which is different to classical three-phase AC system. In addition to that, the respective modulation methods inevitably require the switching of zero vectors to generate the desired output voltage. These are states of operation, where the positive or the negative DC link voltage is connected to the three motor terminals. The resulting common mode voltage represents the input voltage of the described parasitic network. This means, it is – as a source – also an influencing factor for the undesired, parasitic bearing current. The common mode voltage is equal to one third of the sum of the three voltages phase-to-ground. In Figure 17 – on the right, the typical common mode voltage waveform u_{CM} of a two-level inverter with a diode front end as three phase rectifier is exemplified as well as the resulting common mode currents. Steps of $\pm U_D/6$ and $\pm U_D/2$ with the corresponding fast voltage changes $\mathrm{d}u/\mathrm{d}t$ can occur. At each change, the resulting common mode current pulse i_{CM} is clearly visible.

The manner and degree to which this CMV is expressed at the terminals is dependent on the specific Converter topology converter infeed, grounding, etc. The resultant electrical bearing stress will depend on a number of system design factors including ASD carrier frequency, motor geometry, cable type and drive train interaction.

Documents
Document Sharing Hub

Full document details: IEC TS 60034-25 2022 CMV

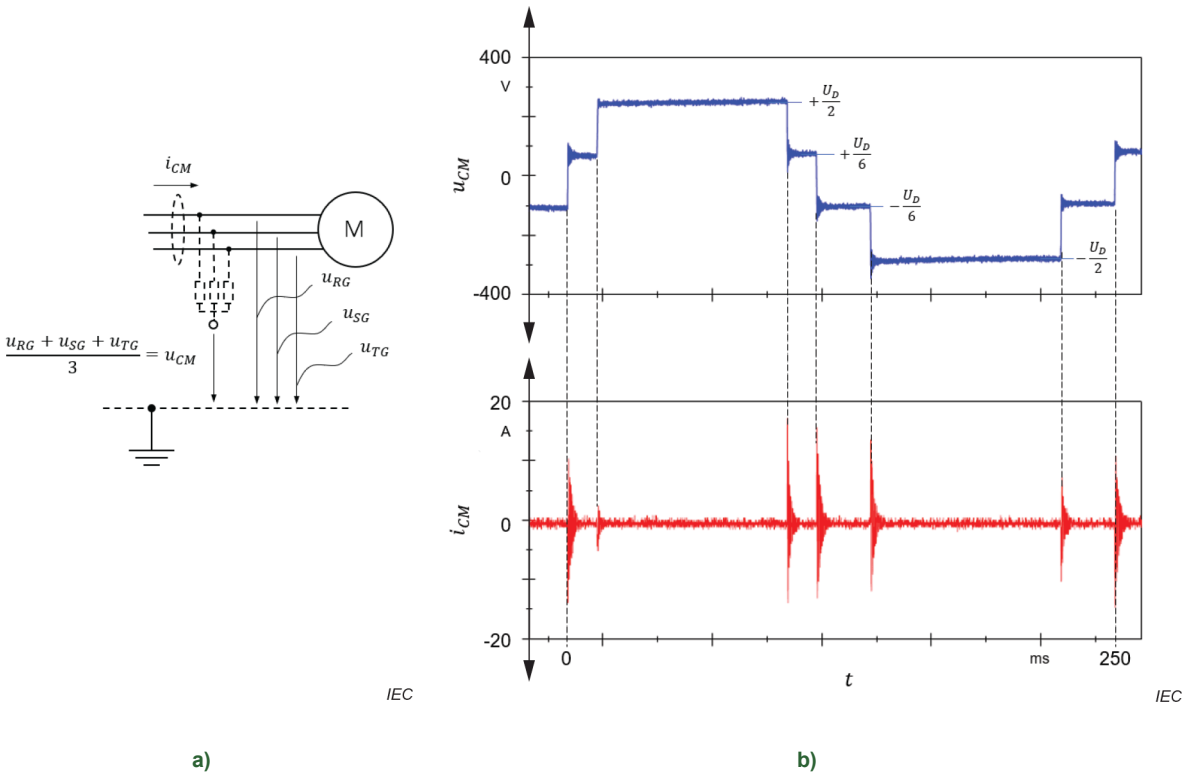

Figure 17 – Common mode voltage a) determination b) waveform example

8.2.2 Motor HF equivalent circuit and the resulting bearing current types

Practically, the common mode voltage is the input variable for the parasitic network which is established by the subsequent drive system. For the high-frequency equivalent circuit of the motor the components of this network shall be explicitly considered as interface areas, air gaps and insulation inside the drive system. The HF equivalent circuit diagram of the motor is depicted in Figure 18. The applied common mode voltage u_{CM} generates the current component i_{CM}, to flow mainly through the parasitic capacity component C_{WS}. This capacity component is formed between the winding system of a motor and its stator. Other capacities are present between winding and rotor (C_{WR}), between rotor and stator (C_{RS}) and inside the rolling bearings (C_B). While the first three portions are determined solely by the geometric dimensions, the latter is heavily dependent on the operating conditions. Speed, temperature, bearing load and the excitation of vibrations have a very strong impact on the bearing capacity.

The current flow into the bearings can change rapidly, depending on the condition of the bearing. For instance, the presence of capacitance in the bearings is only sustained for as long as the anti-friction bearings are covered in lubricant and are non-conducting. This capacitance can be short-circuited if the bearing voltage exceeds the threshold of the breakover value or if the bearing lubricant film is depleted and makes contact with both bearing races. At very low speed, the bearings may also have metallic contact due to the lack of insulating lubricant film.

The main focus is on the alterations in roller bearings. Slide bearings rarely show any irregularities caused by current passage, firstly due to a more distinct separation of the sliding partners (lubrication film thickness is 40 up to 50 times bigger compared to roller bearings) and secondly due to the non-existent rolling mechanism. As a consequence of this sleeve bearings usually have little to no abnormalities that could be traced back to an electrical stress on the bearings.

Documents
Document Sharing Hub
Full document details: IEC TS 60034-25 2022 CMV

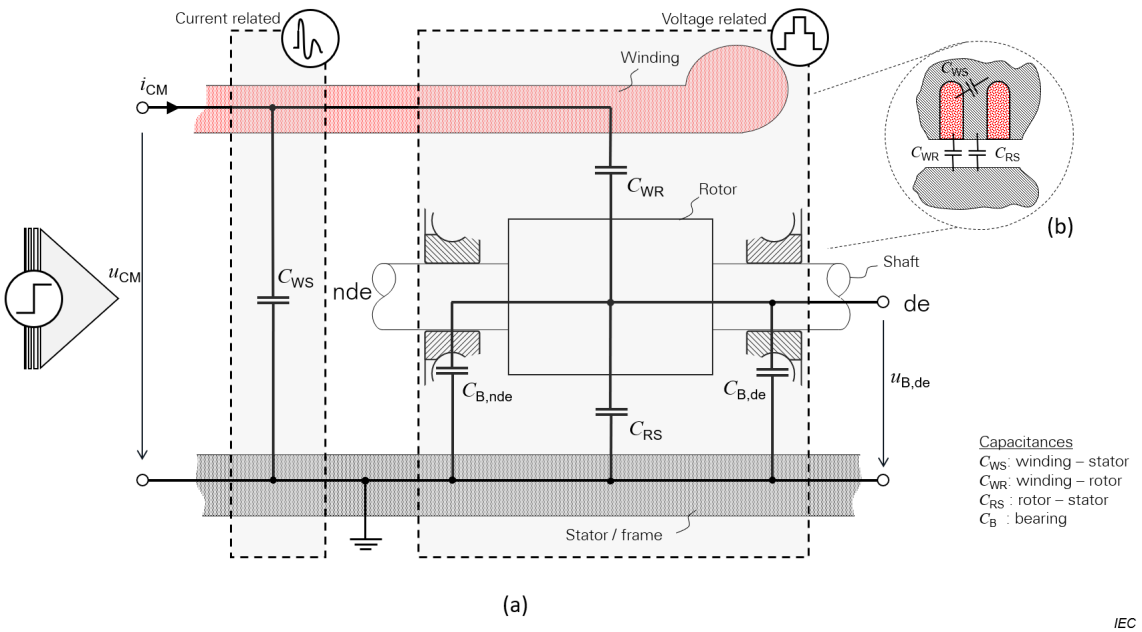

Figure 18 – HF equivalent circuit diagram (a) of a motor (b) geometrical representation of capacitances

A distinction is made between three types of bearing currents (Figure 15): high-frequency circular currents inside the motor as well as high-frequency currents from rotor to ground (current related bearing currents) and the EDM currents with flash-overs in the lubrication film of the bearing (voltage related bearing currents). For every rapid change of the common mode voltage a common mode current peak occurs (Figure 17). Only in this instant a current related bearing current may appear. The characteristically waveform for such a bearing current event can be described with two magnitudes: the peak value of the current and the basic frequency of the following damping oscillation which is in the range of 200 kHz to 300 kHz. Additionally, the number of peak events per time unit which is directly connected to the common mode voltage slope defines the appearance frequency of this current related bearing currents.

On the other hand, the voltage related bearing currents are strongly related to the voltage drop across the lubrication gap of the bearing which is a portion of the common mode voltage as depicted in the motor HF equivalent circuit (Figure 18). This kind of bearing current can be described also by a peak value and the basic frequency of the following damping oscillation which is in the range of 1 MHz to 5 MHz. In this case the number of peak events per time unit is directly connected to the isolation ability of the lubrication film inside the bearing.

A graphical representation of the different high harmonic bearing current types highlighting the involved physical components of the drive unit is shown in Figure 19. These types of bearing currents are principally shown in a schematic drive system in Figure 19. These are explained in detail in the following subclauses.

Documents
Document Sharing Hub
Full document details: IEC TS 60034-25 2022 CMV

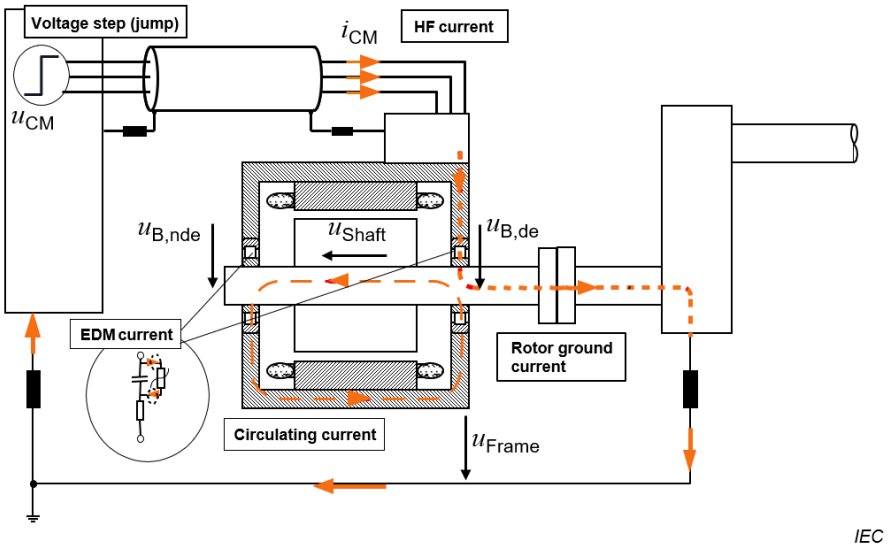

Figure 19 – Graphical representation of the different high frequency bearing current types in the drive unit highlighting the involved physical components

8.2.3 Circulating current

The circular currents depicted in the left part of the equivalent circuit diagram in Figure 20 has a crucial influence – in form of the parasitic capacity between winding and stator lamination C_{WS}. The high-frequency common mode current, which is flowing off via the slot insulation, induces a circular magnetic flux, which encircles the shaft of the motor. The voltage induced by that flux into the shaft of the motor causes a high-frequency circular current, which closes over: laminated core – bearing shield – motor bearing – shaft. This differs from the classical circular bearing current which leads to a circular current with motor fundamental frequency due to magnetic unbalances. The circular current caused by converter operation features has a significantly higher frequency. The circumstances are schematically shown in Figure 20, on the left. On the right-hand side, the current time plots, measured at both motor bearings are indicated. Both current courses show a phase displacement of 180° at identical amplitude and thus they represent a circular current. This circulating current typically causes damage to the bearings with typical peak values of 3 A to 20 A, depending on the size of the electrical motor, the rate of rise of the voltage at the electrical motor terminals and the DC link voltage level.

Documents
Document Sharing Hub
Full document details: IEC TS 60034-25 2022 CMV

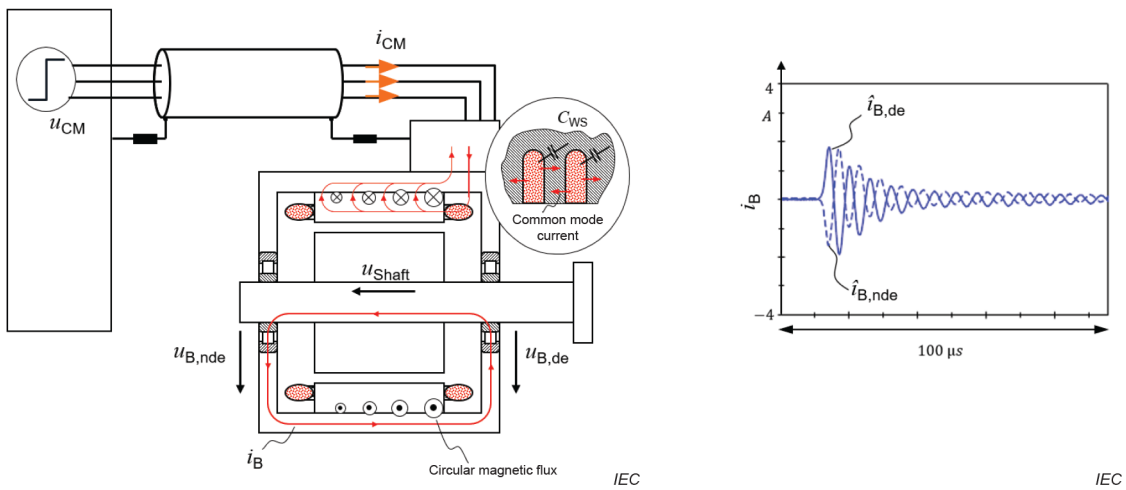

a) b)

Figure 20 – Principle of circulating currents formation

8.2.4 Rotor ground current

The current flowing from the winding through the capacity C_{WS} – illustrated in Figure 18 – to the stator core lamination is routed back via the enclosing grounding system to the source – the DC link of the converter. In case, the grounding conditions at the motor are designed in such a way, that a path of low impedance is leading to the shaft of the motor, currents of considerable amplitude can flow via the connection motor shaft coupling a load. In this way, they can potentially damage electrically passive plant component that are connected to the motor. Thus, the amplitude of the current from rotor to ground is strongly dependent on the quality of the enclosing grounding system. In Figure 21, the possible current paths are illustrated that are originated by the extension of the HF equivalent circuit diagram depicted in Figure 18. Here, the capacities of the motor, the load and the impedances of the enclosing grounding system can be identified.

Documents
Document Sharing Hub
Full document details: IEC TS 60034-25 2022 CMV