IEC TS 60079-39

Edition 1.0 2015-06

TECHNICAL SPECIFICATION

colour inside

Explosive atmospheres –
Part 39: Intrinsically safe systems with electronically controlled spark duration limitation

IEC TS 60079-39:2015-06(en)

Documents
Document Sharing Hub

Full document details: IEC TS 60079-39 2015

THIS PUBLICATION IS COPYRIGHT PROTECTED
Copyright © 2015 IEC, Geneva, Switzerland

All rights reserved. Unless otherwise specified, no part of this publication may be reproduced or utilized in any form or by any means, electronic or mechanical, including photocopying and microfilm, without permission in writing from either IEC or IEC's member National Committee in the country of the requester. If you have any questions about IEC copyright or have an enquiry about obtaining additional rights to this publication, please contact the address below or your local IEC member National Committee for further information.

IEC Central Office
3, rue de Varembé
CH-1211 Geneva 20
Switzerland

Tel.: +41 22 919 02 11
Fax: +41 22 919 03 00
info@iec.ch
www.iec.ch

About the IEC
The International Electrotechnical Commission (IEC) is the leading global organization that prepares and publishes International Standards for all electrical, electronic and related technologies.

About IEC publications
The technical content of IEC publications is kept under constant review by the IEC. Please make sure that you have the latest edition, a corrigenda or an amendment might have been published.

IEC Catalogue - webstore.iec.ch/catalogue
The stand-alone application for consulting the entire bibliographical information on IEC International Standards, Technical Specifications, Technical Reports and other documents. Available for PC, Mac OS, Android Tablets and iPad.

IEC publications search - www.iec.ch/searchpub
The advanced search enables to find IEC publications by a variety of criteria (reference number, text, technical committee,…). It also gives information on projects, replaced and withdrawn publications.

IEC Just Published - webstore.iec.ch/justpublished
Stay up to date on all new IEC publications. Just Published details all new publications released. Available online and also once a month by email.

Electropedia - www.electropedia.org
The world's leading online dictionary of electronic and electrical terms containing more than 30 000 terms and definitions in English and French, with equivalent terms in 15 additional languages. Also known as the International Electrotechnical Vocabulary (IEV) online.

IEC Glossary - std.iec.ch/glossary
More than 60 000 electrotechnical terminology entries in English and French extracted from the Terms and Definitions clause of IEC publications issued since 2002. Some entries have been collected from earlier publications of IEC TC 37, 77, 86 and CISPR.

IEC Customer Service Centre - webstore.iec.ch/csc
If you wish to give us your feedback on this publication or need further assistance, please contact the Customer Service Centre: csc@iec.ch.

AVA Documents
Document Sharing Hub

Full document details: IEC TS 60079-39 2015

IEC TS 60079-39

Edition 1.0 2015-06

TECHNICAL SPECIFICATION

colour inside

Explosive atmospheres –
Part 39: Intrinsically safe systems with electronically controlled spark duration limitation

INTERNATIONAL
ELECTROTECHNICAL
COMMISSION

ICS 29.260.20

ISBN 978-2-8322-2734-3

Warning! Make sure that you obtained this publication from an authorized distributor.

® Registered trademark of the International Electrotechnical Commission

Documents
Document Sharing Hub

Full document details: IEC TS 60079-39 2015

CONTENTS

FOREWORD 5
INTRODUCTION 7
1 Scope 8
2 Normative references 8
3 Definitions 9
4 Power-i architecture 10
5 Requirements for Power-i devices 11
5.1 General 11
5.2 Power-i source 11
5.3 Power-i field device 13
5.4 Power-i wiring 14
5.5 Power-i terminator 15
5.6 Test instruments for Power-i loop check 15
5.7 Power-i application classes 15
6 System requirements 16
6.1 Selection of the permissible Power- i current class of the Power-i source 16
6.2 Verification of a Power-i system 17
7 Assessment and testing 19
7.1 Procedure to define safety-relevant parameters 19
7.2 Type test 20
7.3 Routine test 20
8 Marking of Power-i devices 20
8.1 General 20
8.2 Examples of marking 20
9 Instructions 21
Annex A (normative) Assessment of Power-i safety parameters 22
A.1 General 22
A.2 Power-i specific test equipment 22
A.2.1 Power-i universal test equipment 22
A.2.2 Power-i dummy load 23
A.3 Determination of the safety-relevant parameters for Power-i devices and Power-i wiring 24
A.3.1 General 24
A.3.2 Safety-relevant parameters for the Power-i source 24
A.3.3 Safety-relevant parameters for the Power-i field devices 31
A.3.4 Safety-relevant parameters for Power-i wiring 34
A.3.5 Safety-relevant parameters for the Power-i terminator 36
Annex B (informative) Explanation and details of the Power-i basic concept 37
B.1 Physical basics of an ignition 37
B.2 Output characteristics of a Power-i source 39
B.3 Measurement and scientific results as basis for Power- i minimum ignition values 41
B.3.1 Test setups for the determination of the ignition probability 41
B.3.2 Result of the spark ignition tests and their implementation in Table 3 43

Documents
Document Sharing Hub
Full document details: IEC TS 60079-39 2015

Annex C (informative) Examples of Power-i devices and systems 46
C.1 Power-i application for a solenoid valve 46
C.2 Example of a generally designed Power-i source 47
C.3 Example of a Power-i field device 47
C.4 Example of a Power-i dummy load 48
C.5 Example of a Power-i terminator 48
Annex D (informative) Example of interconnection of Power-i devices including Power-i wiring to a Power-i system 50
D.1 Specific aim and given values 50
D.2 Solution example 50

Figure 1 – The simplest Power-i architecture 10
Figure 2 – Example of complex Power-i concept architecture 11
Figure 3 – Elements of a Power-i source with voltage and current limitation 12
Figure 4 – Example of a universal Power-i field device (basic structure) 14
Figure 5 – Basic assessment procedure for a Power-i system 19
Figure A.1 – Basic principle of the Power-i universal test equipment 23
Figure A.2 – Pulse output between terminals 3 and 1 of Figure A.1 23
Figure A.3 – Basic principle of a Power-i dummy load 24
Figure A.4 – Basic principle of the equipment for the determination of the response time $t_{\text{resp-source}}$ 25
Figure A.5 – Example of an oscillogram to determine the response time $t_{\text{resp-source}}$ 26
Figure A.6 – Test equipment for the determination of the assessment factor AF_{source} (basic principle) 27
Figure A.7 – Test equipment for the assessment factor test for Power-i source 28
Figure A.8 – Example of an oscillogram from a test of a Power-i source with an assessment factor AF = 8,29 for a break spark 29
Figure A.9 – Test equipment for transition pulse test of a Power-i source 30
Figure A.10 – Test equipment for the determination of the assessment factor $AF_{\text{field device}}$ for Power-i field devices (basic principle) 32
Figure A.11 – Test equipment for the transition pulse test of Power-i field devices 33
Figure A.12 – Evaluation parameter of test pulse U_{pulse} for transition pulse test 34
Figure A.13 – Test equipment for the determination of the response time of the Power-i trunk $t_{\text{resp-trunk}}$ (basic principle) 35
Figure B.1 – Example of a typical trace of a break spark supplied with a linearly limited source 38
Figure B.2 – Example of a typical trace of a break spark limited by a Power-i source 38
Figure B.3 – Example of output set of characteristic curves of a Power-i source during load connection 40
Figure B.4 – Basic principle of a Power-i power source for the voltage threshold return mode 41
Figure B.5 – Example of output set of characteristic curves of a Power-i source in the case of a failure 41
Figure B.6 – Test setup with STA for break sparks 42
Figure B.7 – Test setup with STA for make sparks 42
Figure B.8 – Power-i ignition values for voltage class 24V (24 VDC) 43
Figure B.9 – Power-i ignition values for voltage class 32V (32 VDC) 44

AVA Documents
Document Sharing Hub
Full document details: IEC TS 60079-39 2015

Figure B.10 – Power-i ignition values for voltage class 40V (40 VDC) 44
Figure B.11 – Ignition energy in relation to the used hydrogen percentage in the gas mixtures 45
Figure C.1 – Simple solenoid valve Power-i application (example) 46
Figure C.2 – Example of a generally styled Power-i field device 47
Figure C.3 – Example of a V-limitation unit (level of protection “ib”) 48
Figure C.4 – Example of a Power-i dummy load 48
Figure C.5 – Example of a Power-i terminator 49

Table 1 – Definition of Power-i voltage classes 16
Table 2 – Definition of Power-i current classes 16
Table 3 – Permitted combinations of Power-i application classes for Power-i sources as a function of the system response time for all Groups (n.a. = not allowed) 17
Table 4 – Power-i current classes of Power-i field devices or Power-i terminators matching the current class of the Power-i source 18
Table 5 – Relevance for Power-i test procedures 20

Documents
Document Sharing Hub

Full document details: IEC TS 60079-39 2015

INTERNATIONAL ELECTROTECHNICAL COMMISSION

EXPLOSIVE ATMOSPHERES –

Part 39: Intrinsically safe systems with electronically controlled spark duration limitation

FOREWORD

1) The International Electrotechnical Commission (IEC) is a worldwide organization for standardization comprising all national electrotechnical committees (IEC National Committees). The object of IEC is to promote international co-operation on all questions concerning standardization in the electrical and electronic fields. To this end and in addition to other activities, IEC publishes International Standards, Technical Specifications, Technical Reports, Publicly Available Specifications (PAS) and Guides (hereafter referred to as "IEC Publication(s)"). Their preparation is entrusted to technical committees; any IEC National Committee interested in the subject dealt with may participate in this preparatory work. International, governmental and non-governmental organizations liaising with the IEC also participate in this preparation. IEC collaborates closely with the International Organization for Standardization (ISO) in accordance with conditions determined by agreement between the two organizations.
2) The formal decisions or agreements of IEC on technical matters express, as nearly as possible, an international consensus of opinion on the relevant subjects since each technical committee has representation from all interested IEC National Committees.
3) IEC Publications have the form of recommendations for international use and are accepted by IEC National Committees in that sense. While all reasonable efforts are made to ensure that the technical content of IEC Publications is accurate, IEC cannot be held responsible for the way in which they are used or for any misinterpretation by any end user.
4) In order to promote international uniformity, IEC National Committees undertake to apply IEC Publications transparently to the maximum extent possible in their national and regional publications. Any divergence between any IEC Publication and the corresponding national or regional publication shall be clearly indicated in the latter.
5) IEC itself does not provide any attestation of conformity. Independent certification bodies provide conformity assessment services and, in some areas, access to IEC marks of conformity. IEC is not responsible for any services carried out by independent certification bodies.
6) All users should ensure that they have the latest edition of this publication.
7) No liability shall attach to IEC or its directors, employees, servants or agents including individual experts and members of its technical committees and IEC National Committees for any personal injury, property damage or other damage of any nature whatsoever, whether direct or indirect, or for costs (including legal fees) and expenses arising out of the publication, use of, or reliance upon, this IEC Publication or any other IEC Publications.
8) Attention is drawn to the Normative references cited in this publication. Use of the referenced publications is indispensable for the correct application of this publication.
9) Attention is drawn to the possibility that some of the elements of this IEC Publication may be the subject of patent rights. IEC shall not be held responsible for identifying any or all such patent rights.

The main task of IEC technical committees is to prepare International Standards. In exceptional circumstances, a technical committee may propose the publication of a technical specification when

- the required support cannot be obtained for the publication of an International Standard, despite repeated efforts, or
- the subject is still under technical development or where, for any other reason, there is the future but no immediate possibility of an agreement on an International Standard.

Technical specifications are subject to review within three years of publication to decide whether they can be transformed into International Standards.

IEC TS 60079-39, which is a technical specification, has been prepared by subcommittee 31G: Intrinsically safe apparatus, of IEC technical committee 31: Equipment for explosive atmospheres.

Documents
Document Sharing Hub

Full document details: IEC TS 60079-39 2015

The text of this technical specification is based on the following documents:

Enquiry draft	Report on voting
31G/236A/DTS	31G/242/RVC

Full information on the voting for the approval of this technical specification can be found in the report on voting indicated in the above table.

This publication has been drafted in accordance with the ISO/IEC Directives, Part 2.

A list of all parts in the IEC 60079 series, published under the general title *Explosive atmospheres*, can be found on the IEC website.

The committee has decided that the contents of this publication will remain unchanged until the stability date indicated on the IEC web site under "http://webstore.iec.ch" in the data related to the specific publication. At this date, the publication will be

- transformed into an International standard,
- reconfirmed,
- withdrawn,
- replaced by a revised edition, or
- amended.

A bilingual version of this publication may be issued at a later date.

The contents of the corrigendum of October 2020 have been included in this copy.

IMPORTANT – The 'colour inside' logo on the cover page of this publication indicates that it contains colours which are considered to be useful for the correct understanding of its contents. Users should therefore print this document using a colour printer.

Documents
Document Sharing Hub

Full document details: IEC TS 60079-39 2015

INTRODUCTION

This part of IEC 60079, which is a Technical Specification, is being issued as a “prospective standard for provisional application” in the field of *Explosive Atmospheres – Intrinsically safe systems with electronically controlled spark duration limitation* because there is an urgent need for guidance on how standards in this field should be used to meet an identified need.

Intrinsically safe systems with electronically controlled spark duration can provide more power available in intrinsically safe circuits while maintaining the level of protection “ib” or “ic”. In addition to limiting the voltage and current (similar to conventional intrinsically safe circuits), the duration of the spark is limited, which also restricts the amount of energy available for ignition.

The general requirements for the installation of IS equipment are applicable to Power-i circuits.

This new technology allows an expansion in the field of industrial applications using the type of protection Intrinsic Safety ‘i.

This technology, however, requires a new and more extensive approach of the type of protection Intrinsic Safety “i”.

Documents
Document Sharing Hub

Full document details: IEC TS 60079-39 2015

EXPLOSIVE ATMOSPHERES –

Part 39: Intrinsically safe systems with electronically controlled spark duration limitation

1 Scope

This Technical Specification specifies the construction, testing, installation and maintenance of Power-i apparatus and systems which utilise electronically controlled spark duration limitation to maintain an adequate level of intrinsic safety.

This Technical Specification contains requirements for intrinsically safe apparatus and wiring intended for use in explosive atmospheres and for associated apparatus intended for connection to intrinsically safe circuits entering such atmospheres.

This Technical Specification excludes the level of protection “ia” and the use of software-controlled circuits.

This Technical Specification applies to electrical equipment utilising voltages not higher than 40 V d.c. and a safety factor 1,5 for Groups IIB, IIA, I and III. It is also applicable to Group IIC “ic” apparatus with a safety factor 1,0. Group IIC “ib” apparatus with a safety factor 1,5 are restricted to voltages up to 32 V d.c.

This type of protection is applicable to electrical equipment in which the electrical circuits themselves are incapable of causing an explosion of the surrounding explosive atmospheres.

This Technical Specification is applicable to intrinsically safe apparatus and systems which utilise electronically controlled spark duration limitation with the aim of providing more electrical power while maintaining an adequate level of safety.

This Technical Specification is also applicable to electrical equipment or parts of electrical equipment located outside hazardous areas or protected by another type of protection listed in the IEC 60079 series, where the intrinsic safety of the electrical circuits in explosive atmospheres depends on the design and construction of such electrical equipment or parts of such electrical equipment. The electrical circuits located in the hazardous area are evaluated for use in such locations by applying this Technical Specification.

This Technical Specification supplements and modifies the requirements of IEC 60079-0, IEC 60079-11, IEC 60079-14, IEC 60079-17 and IEC 60079-25.

2 Normative references

The following documents, in whole or in part, are normatively referenced in this document and are indispensable for its application. For dated references, only the edition cited applies. For undated references, the latest edition of the referenced document (including any amendments) applies.

IEC 60079-0, *Explosive atmospheres – Part 0: Equipment – General requirements*

IEC 60079-11, *Explosive atmospheres – Part 11: Equipment protection by intrinsic safety "i"*

IEC 60079-14, *Explosive atmospheres – Part 14: Electrical installations design, selection and erection*

AVA Documents
Document Sharing Hub

Full document details: IEC TS 60079-39 2015

IEC 60079-25, *Explosive atmospheres – Part 25: Intrinsically safe electrical systems*

3 Definitions

For the purpose of this document, the terms and definitions given in IEC 60079-0 and IEC 60079-11, as well as the following apply.

3.1
Power-i
intrinsically safe concept where the level of protection is provided by voltage and current limitation and additional electronically controlled spark duration limitation

Note 1 to entry: Power-i contains Power-i devices and Power-i wiring.

Note 2 to entry: Power-i encompasses electric circuits which in the Power-i mode operate with voltage and current values which can exceed the values defined in IEC 60079-11.

3.2
Power-i device
Power-i source, Power-i field device(s) and (if applicable) Power-i terminator

3.3
Power-i terminator
unit to prevent reflections of voltage and current waves at the end of the Power-i wiring

Note 1 to entry: The Power-i terminator is only relevant where data transmission uses the Power-i wiring.

3.4
Power-i source
power supply for Power-i devices providing shutdown of power in case of faults

Note 1 to entry: Operating in two modes: Power-i mode and shutdown mode.

3.5
Power-i field device
device that is connected to one Power-i source via Power-i wiring

Note 1 to entry: Power-i field devices can have additional connections to other devices (e.g. loads).

3.6
Power-i mode
operating mode of the Power-i source delivering the rated Power-i output power

Note 1 to entry: In this mode the values of permitted voltage and current can exceed the values of curves and tables stated in IEC 60079-11.

3.7
shutdown mode
operating mode of the Power-i source after a spark event has been detected

3.8
spark pulse
information resulting from a spark event in the Power-i system

Note 1 to entry: A distinction is made between the make spark pulse and the break spark pulse.

Documents
Document Sharing Hub
Full document details: IEC TS 60079-39 2015

3.9
Power-i response time

3.9.1
$t_{resp\text{-}source}$
maximum delay time between the detection of the spark pulse and reaching the shutdown mode (only relevant for the Power-i source)

3.9.2
$t_{resp\text{-}trunk}$
propagation time of the trunk cable used (only relevant for Power-i wiring)

3.9.3
$t_{resp\text{-}system}$
time between the occurrence of a spark and the reduction of the spark power to safe operation in the shutdown mode in a Power-i system

3.10
assessment factor AF
factor of attenuation or sensitivity of Power-i devices and Power-i wiring

Note 1 to entry: The assessment factor has to be distinguished between:

– Assessment factor for Power-i field devices, for the Power-i terminator and for Power-i wiring: In these cases the assessment factor is a parameter for the attenuation of a spark pulse.

– Assessment factor for the Power-i source: In this case the assessment factor is a parameter defining the sensitivity for the detection of a spark pulse.

Note 2 to entry: The assessment factor should be expressed in logarithmic units.

4 Power-i architecture

In a Power-i system only one active Power-i source shall be connected via Power-i wiring to supply one or several Power-i field devices. The simplest structure consists of one active Power-i source, Power-i wiring and one Power-i field device (see Figure 1).

The use of redundant power supplies which present one effective source of power is permitted.

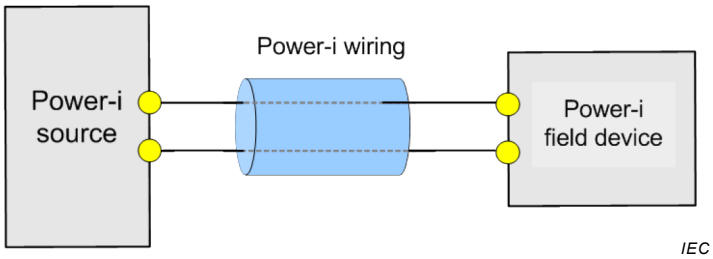

Figure 1 – The simplest Power-i architecture

A Power-i system may be extended to a complex system as shown in Figure 2.

Documents
Document Sharing Hub
Full document details: IEC TS 60079-39 2015

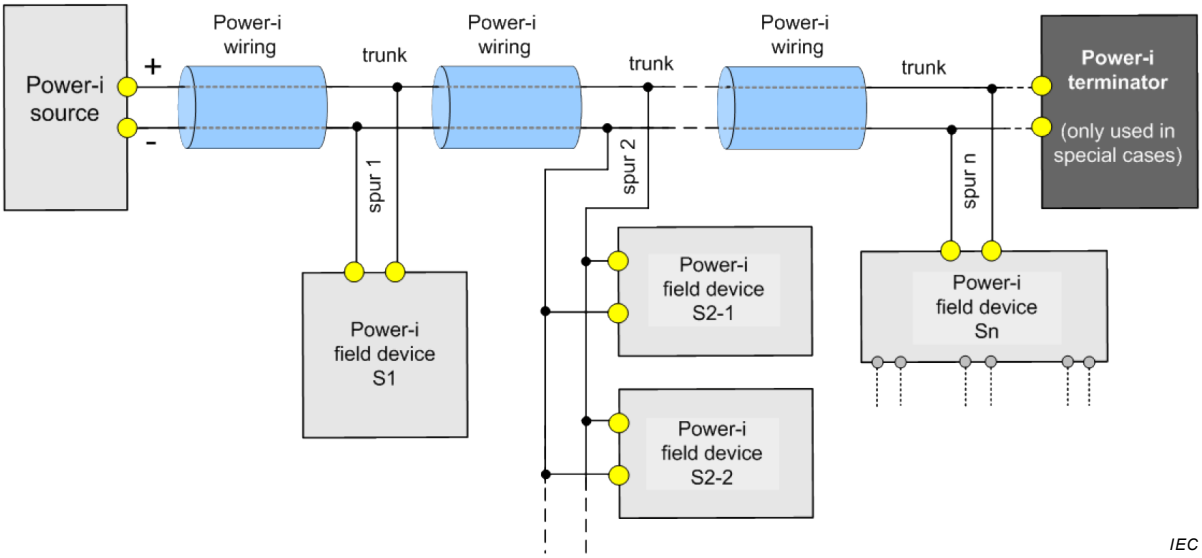

Figure 2 – Example of complex Power-i concept architecture

NOTE The Power-i field device Sn is identical to Power-i field device S1, S2-1 or S2-2 in terms of the connection to Power-i wiring but is shown with additional output/input terminals. These terminals are subject to requirements of a type of protection prescribed by the IEC 60079 series suitable for the applications.

5 Requirements for Power-i devices

5.1 General

Power-i has to be considered as a system. Therefore the following requirements for all Power-i devices apply:

a) The detection of the spark pulse shall not be invalidated during static or transient conditions (e.g. soft start) – neither by the Power-i wiring nor by the Power-i devices; therefore Power-i requires the consideration of the whole system.

b) All Power-i devices and the Power-i wiring shall be assessed and tested in accordance with Annex A.

c) All Power-i devices shall be classified in accordance with 5.7.

d) Power-i devices shall meet the requirements of IEC 60079-0, IEC 60079-11 and IEC 60079-25 as applicable in addition to other IEC 60079 standards (e.g. IEC 60079-7, IEC 60079-18 if applicable).

e) The application of these requirements shall additionally take into account any effect in timing and sensitivity of the safety function of the Power-i devices due to temperature effects and component tolerance.

f) Faults determined to be the most onerous (e.g. for timing, sensitivity etc.) for the safety function of Power-i devices shall be applied to equipment for all tests required by this Technical Specification.

5.2 Power-i source

There shall be only one active Power-i source per Power-i system. The Power-i source shall be placed at one end of the Power-i wiring (trunk).

A Power-i source shall detect make-sparks (sparks occurring when short-circuiting an electrical circuit causing a current change $+\frac{di}{dt}$) and break-sparks (sparks occurring when opening an electrical circuit causing a current change $-\frac{di}{dt}$) and it shall provide a fast shutdown of the output power when a spark pulse occurs. Figure 3 shows the core elements of a Power-i source with an upstream safety-relevant voltage and a current limitation unit.

AVA Documents Document Sharing Hub

Full document details: IEC TS 60079-39 2015

In all modes of operation where the intrinsically safe values based on conventional power limitation according to IEC 60079-11 and IEC 60079-25 are exceeded, the detection of current changes ± $\frac{di}{dt}$ shall not be invalidated. This includes the transition phase from the safe mode to the Power-i mode.

NOTE A current change $\frac{di}{dt}$ might be suppressed in the constant current mode; therefore a spark cannot be detected in this mode.

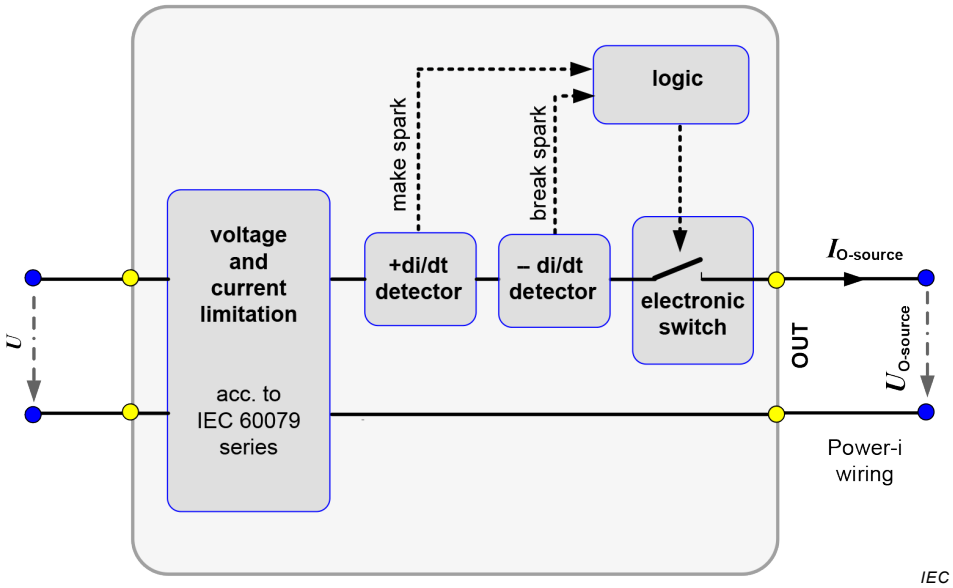

Figure 3 – Elements of a Power-i source with voltage and current limitation

The Power-i source shall conform to the following safety-relevant requirements:

a) The Power-i source output current $I_{O\text{-source}}$ and output voltage $U_{O\text{-source}}$ limited by the voltage and current limitation shall meet the requirements of Table 1 and Table 2.

b) The Power-i source shall be capable of detecting dynamic changes of the output current $I_O \pm \frac{di}{dt}$ as defined in A.3.2. The source shall react with a subsequent transition from Power-i mode to shutdown mode.

c) In the shutdown mode the value of the output current $I_{shutdown}$ may be zero but shall not exceed 50 % of the permissible current $I_{O\text{-IEC}}$ based on IEC 60079-11 or IEC 60079-25 with the applicable safety factor for the appropriate Power-i voltage class; in this case the following equation applies.

$$I_{shutdown} = I_{O-source} \leq 0{,}5 I_{O-IEC} .$$

d) Within 20 µs of the spark disturbance information arriving at the Power-i source, the output current of the Power-i source shall be equal to or less than 75% of the $I_{O\text{-IEC}}$ -value within the first 20 µs of the transition to shutdown mode a transient output current $I_{shutdown\text{-}20\mu s}$ of 75 % of the $I_{O\text{-IEC}}$ value is allowed (see Figure A.5); in this case the following equation applies:

$$I_{shutdown-20\mu s} = I_{O-source} \leq 0{,}75 I_{O-IEC} .$$

e) The transient output voltage overshoot $U_{overshoot\text{-}40\mu s}$ during shutdown mode shall not exceed the rated output voltage $U_{O\text{-source}}$ by more than 6 V for a maximum duration of 40 µs. In this case the following equation applies:

Documents
Document Sharing Hub
Full document details: IEC TS 60079-39 2015

$$U_{\text{overshoot}-40\mu\text{s}} \leq U_{\text{O}-\text{source}} + 6V \ .$$

f) The Power-i source shall meet the requirements of the test procedures of A.3.2.

g) The following components of the Power-i source (see Figure 3) are safety relevant and shall meet the requirements of 5.1 a) and d) for the respective type of protection:

- output voltage limitation $U_{\text{O-source}}$ and output current limitation $I_{\text{O-source}}$;
- $+\frac{di}{dt}$ detector and $-\frac{di}{dt}$ detector;
- logic and
- electronic switch.

h) The output circuit of a Power-i source shall be isolated from earth. The requirements for the isolation shall be taken from IEC 60079-11.

5.3 Power-i field device

Power-i field devices consist of a decoupling device and the actual load. Power-i field devices shall decouple the load from the Power-i wiring.

The design of a Power-i field device shall ensure the detection of a spark pulse in accordance with this Technical Specification.

Power-i field devices shall meet the following safety-relevant requirements:

a) They shall ensure that both, make-sparks and break-sparks, are not attenuated in any way that the detection by the Power-i source is invalidated.

b) Under normal or fault conditions as specified in IEC 60079-11 the power-i field device shall remain passive, that is the terminals shall not be a source of energy to the system except for a leakage current not greater than 50 μA.

The consideration of Li and Ci for Power-i field devices based on IEC 60079-11 is not required. This is taken into account in the test procedures described in A.3.3.

c) They shall have an appropriate type of protection in accordance with IEC 60079-0 for the respective explosive atmosphere in which they are used.

d) They shall have safety-relevant parameters determined in accordance with A.3.3.

NOTE Due to parallel connection with Power-i wiring, the Power-i response time for field devices is negligible.

e) All components determinant for both the assessment factor $AF_{\text{field device}}$ and the result of the transition pulse test (A.3.3.4) shall meet the requirements of 5.1 a).

f) The input circuit of a Power-i field device shall be isolated from earth. The requirements for the isolation from earth shall be taken from IEC 60079-11.

As an example the Power-i field device shown in Figure 4 conforms to the requirements mentioned above and can be used for a wide field of applications. The field device in Figure 4 consists of a decoupling device in combination with an arbitrary load.

The basic structure of the Power-i field device depicted in Figure 4 shows the elements necessary to ensure that both make and break sparks are not attenuated in such a way that the detection by the Power-i source is invalidated.

In Figure 4 inductance L, capacitance C, all diodes and the V-limitation unit are safety relevant and shall meet the requirements of 5.1 for the appropriate type of protection.

Documents
Document Sharing Hub
Full document details: IEC TS 60079-39 2015

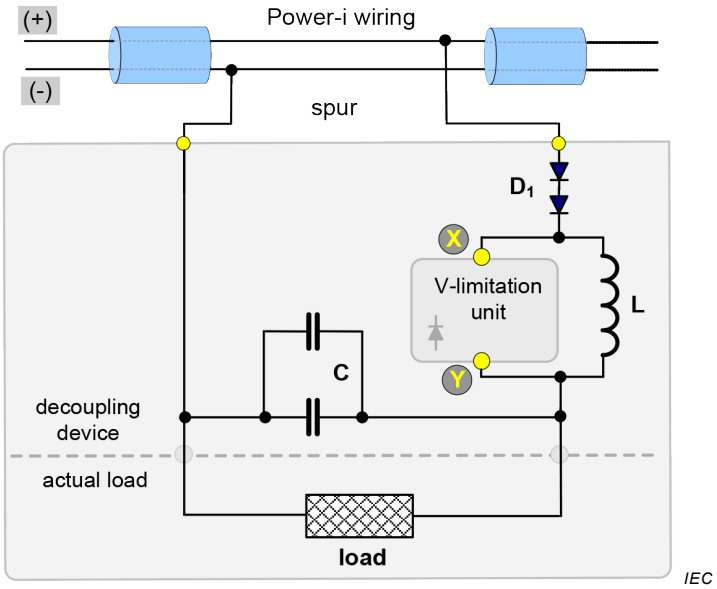

Figure 4 – Example of a universal Power-i field device (basic structure)

The V-limitation unit shall limit the positive voltage (plus (+) at point Y and minus (-) at point X) measured from Y to X to a value of 5 V ± 1 V and shall meet the requirements in accordance with A.3.3.4.

Practical examples of Figure 4 are shown in C.3.

5.4 Power-i wiring

The Power-i wiring shall meet the following requirements:

a) The transmission of a spark pulse shall not be impaired in a way that prevents the detection of a relevant make or break spark pulse;

b) All Power-i wiring (Power-i trunk cable including all spur cables) shall meet the specific requirements given in IEC 60079-11, IEC 60079-14 and IEC 60079-25;

c) Multi-core (multi-circuit) cable type C as defined in IEC 60079-25 shall be excluded for Power-i wiring;

d) The system response time $t_{resp\text{-}system}$ depends decisively on the length and propagation delay of the Power-i trunk cable used; the requirements of Table 3 shall apply;

NOTE The cable parameters and the cable length are safety-relevant and determine the maximum response time or the Power-i trunk (see A.3.4).

e) The maximum length of each spur is limited to 15 m. The maximum total length of all spurs in the whole Power-i system is 50 m;

f) If the Power-i trunk cable length is less than 40 m, the value of response time of this cable is considered to be 0,5 µs (see A.3.4.2);

in this case the spur length of each spur is limited to 10 m and the total length of all spurs in the whole Power-i system is 20 m;

g) The calculation basis for characteristic cable impedance Z_W in this Technical Specification is Z_W = 100 Ω; the permitted range of characteristic cable impedance Z_W for Power-i wiring is 80 Ω ≤ Z_W ≤ 120 Ω; the specified values for the characteristic cable impedance refer to a measuring frequency of 100 kHz ± 20 %.

Section g) does not apply for f);

h) The wiring shall meet the requirements of 6 and A.3.4;

Documents
Document Sharing Hub
Full document details: IEC TS 60079-39 2015

i) The use of a screen for Power-i wiring is not essential for safety; if a screen is used it may be earthed as long as it is isolated from the Power-i circuit in accordance with the cable dielectric strength requirements of IEC 60079-25;

j) The Power-i wiring shall be isolated from earth. The requirements for the isolation from earth shall be in accordance with the cable dielectric strength requirements of IEC 60079-25.

5.5 Power-i terminator

Where used, a Power-i terminator shall meet the following requirements:

a) It shall have safety-relevant parameters determined according to A.3.5.

b) All components of the Power-i terminator to prevent feeding back of the current from the Power-i terminator into the Power-i wiring and all components determinant for the assessment factor $AF_{\text{terminator}}$ (see A.3.5.3) are safety relevant and shall meet the requirements of 5.1 a).

c) It shall have a type of protection in accordance with IEC 60079-0 for use in the appropriate explosive atmosphere.

d) The input circuit of a Power-i terminator shall be isolated from earth. The requirements for the isolation from earth shall be taken from IEC 60079-11.

NOTE 1 The Power-i terminator ensures an ac-matching to the characteristic impedance of the connected trunk and is only necessary in case of data transmission as for example in fieldbus systems.

NOTE 2 Due to parallel connection with Power-i wiring, the Power-i response time for terminators is negligible.

An example of a Power-i terminator is shown in Figure C.5.

5.6 Test instruments for Power-i loop check

Intrinsically safe test instruments in accordance with IEC 60079-11 may be connected directly to Power-i wiring without further verification of the Power-i system if the following requirements are observed:

a) the effective inductance L_i of 5 μH is not exceeded ($L_i < 5$ μH);

b) the effective input capacitance C_i of 1 nF is not exceeded, additionally the input resistance R_s shall not be less than 10 kΩ ($R_S \geq 10$ kΩ);

c) the test instrument shall have input parameters U_i and I_i not less than the voltage and current class of the Power-i circuit;

d) the test instrument shall not be a source of energy to the system except for a leakage current not greater than 50 μA.

Alternatively where test instruments complying with the requirements for Power-i field devices are used, they shall be included in the verification of a Power-i system according to 6.2.

NOTE These requirements do not apply to test instruments used by the manufacturer during production, test, repair or overhaul.

5.7 Power-i application classes

Each Power-i device shall be classified into Power-i application classes according to Table 1 and Table 2.

Documents
Document Sharing Hub

Full document details: IEC TS 60079-39 2015