IEC TS 61496-5

Edition 1.0 2023-08

TECHNICAL SPECIFICATION

colour inside

Safety of machinery – Electro-sensitive protective equipment – Part 5: Particular requirements for radar-based protective devices

IEC TS 61496-5:2023-08(en)

Documents
Document Sharing Hub

Full document details: IEC TS 61496-5-2023

THIS PUBLICATION IS COPYRIGHT PROTECTED
Copyright © 2023 IEC, Geneva, Switzerland

All rights reserved. Unless otherwise specified, no part of this publication may be reproduced or utilized in any form or by any means, electronic or mechanical, including photocopying and microfilm, without permission in writing from either IEC or IEC's member National Committee in the country of the requester. If you have any questions about IEC copyright or have an enquiry about obtaining additional rights to this publication, please contact the address below or your local IEC member National Committee for further information.

IEC Secretariat
3, rue de Varembé
CH-1211 Geneva 20
Switzerland

Tel.: +41 22 919 02 11
info@iec.ch
www.iec.ch

About the IEC
The International Electrotechnical Commission (IEC) is the leading global organization that prepares and publishes International Standards for all electrical, electronic and related technologies.

About IEC publications
The technical content of IEC publications is kept under constant review by the IEC. Please make sure that you have the latest edition, a corrigendum or an amendment might have been published.

IEC publications search - webstore.iec.ch/advsearchform
The advanced search enables to find IEC publications by a variety of criteria (reference number, text, technical committee, …). It also gives information on projects, replaced and withdrawn publications.

IEC Just Published - webstore.iec.ch/justpublished
Stay up to date on all new IEC publications. Just Published details all new publications released. Available online and once a month by email.

IEC Customer Service Centre - webstore.iec.ch/csc
If you wish to give us your feedback on this publication or need further assistance, please contact the Customer Service Centre: sales@iec.ch.

IEC Products & Services Portal - products.iec.ch
Discover our powerful search engine and read freely all the publications previews. With a subscription you will always have access to up to date content tailored to your needs.

Electropedia - www.electropedia.org
The world's leading online dictionary on electrotechnology, containing more than 22 300 terminological entries in English and French, with equivalent terms in 19 additional languages. Also known as the International Electrotechnical Vocabulary (IEV) online.

Documents
Document Sharing Hub

Full document details: IEC TS 61496-5-2023

IEC TS 61496-5

Edition 1.0 2023-08

TECHNICAL SPECIFICATION

colour inside

Safety of machinery – Electro-sensitive protective equipment – Part 5: Particular requirements for radar-based protective devices

INTERNATIONAL
ELECTROTECHNICAL
COMMISSION

ICS 13.110; 29.260.99

ISBN 978-2-8322-7299-2

Warning! Make sure that you obtained this publication from an authorized distributor.

® Registered trademark of the International Electrotechnical Commission

Documents
Document Sharing Hub

Full document details: IEC TS 61496-5-2023

CONTENTS

FOREWORD 4
INTRODUCTION 6
1 Scope 7
2 Normative references 8
3 Terms and definitions 8
4 Functional, design and environmental requirements 10
4.1 Functional requirements 10
4.1.1 Normal operation 10
4.1.3 Types of ESPE 10
4.1.6 Zone with limited position accuracy 10
4.2 Design requirements 11
4.2.2 Fault detection requirements 11
4.2.12 Integrity of the RPD detection capability 12
4.2.13 Test targets for type testing 14
4.2.14 Radiation frequencies 15
4.2.15 Radiation intensity 15
4.2.16 Mechanical construction 15
4.3 Environmental requirements 15
4.3.5 Radio interference 15
4.3.6 Pollution interference 16
4.3.7 Interference by surrounding objects 16
4.3.8 Manual interference 16
4.3.9 Drift and ageing of components 16
5 Testing 16
5.1.2 Test conditions 17
5.2 Functional tests 18
5.2.1 Sensing function 18
5.2.2 Response time 20
5.2.3 Limited functional tests 24
5.2.9 Test target for type testing 25
5.2.10 Position accuracy 25
5.2.11 Sensitivity 25
5.2.12 Influences on detection 26
5.2.13 Radiation frequencies 26
5.2.14 Radiation intensity 27
5.2.15 Mechanical construction 27
5.3 Performance testing under fault conditions 27
5.3.2 Type 1 ESPE 27
5.3.3 Type 2 ESPE 27
5.3.4 Type 3 ESPE 27
5.3.5 Type 4 ESPE 27
5.4 Environmental tests 27
5.4.6 Radio frequency interference 27
5.4.7 Interference by surrounding objects 31
5.4.8 Manual interference 40
6 Marking for identification and for safe use 40

AVA Documents
Document Sharing Hub

6.1 General 40
7 Accompanying documents 41
Annex A (normative) Optional functions of the ESPE 42
Annex BB (informative) Relationship between resolution cell and probability of detection 44
Annex CC (informative) Corner reflector 47
Bibliography 49

Figure 1 – Definition of zones inside field of view of an RPD 13
Figure 2 – Radial approaches 21
Figure 3 – Picture illustrating a perpendicular approach (top view) 22
Figure 4 – Overhead setup 23
Figure 5 – Sensitivity test setup 26
Figure 6 – Test setup for continuous wave interference 29
Figure 7 – Example of placement of several additional RPDs 30
Figure 8 – Examples of interfering by moving object setup 32
Figure 9 – Typical installation for the static object interference test 34
Figure 10 – Example of setup for interference in the zone with limited position accuracy 36
Figure 11 – Example of setup for occlusion 38
Figure 12 – Example of detection with high RCS target test setup 39
Figure BB.1 – Relationship between position accuracy and detection zone 44
Figure BB.2 – Relationship between resolution cell and the probabilistic part of the tolerance zone 45
Figure BB.3 – Relationship between resolution cell and tolerance zone 46
Figure CC.1 – Example of a trihedral corner reflector 47
Figure CC.2 – Example values of σ for illuminating radars at 24 GHz and 80 GHz 48

Table 51 – Minimum tests required for the verification of detection capability requirements (see also 4.2.12) 19

Documents
Document Sharing Hub
Full document details: IEC TS 61496-5-2023

INTERNATIONAL ELECTROTECHNICAL COMMISSION

SAFETY OF MACHINERY – ELECTRO-SENSITIVE PROTECTIVE EQUIPMENT –

Part 5: Particular requirements for radar-based protective devices

FOREWORD

1) The International Electrotechnical Commission (IEC) is a worldwide organization for standardization comprising all national electrotechnical committees (IEC National Committees). The object of IEC is to promote international co-operation on all questions concerning standardization in the electrical and electronic fields. To this end and in addition to other activities, IEC publishes International Standards, Technical Specifications, Technical Reports, Publicly Available Specifications (PAS) and Guides (hereafter referred to as "IEC Publication(s)"). Their preparation is entrusted to technical committees; any IEC National Committee interested in the subject dealt with may participate in this preparatory work. International, governmental and non-governmental organizations liaising with the IEC also participate in this preparation. IEC collaborates closely with the International Organization for Standardization (ISO) in accordance with conditions determined by agreement between the two organizations.
2) The formal decisions or agreements of IEC on technical matters express, as nearly as possible, an international consensus of opinion on the relevant subjects since each technical committee has representation from all interested IEC National Committees.
3) IEC Publications have the form of recommendations for international use and are accepted by IEC National Committees in that sense. While all reasonable efforts are made to ensure that the technical content of IEC Publications is accurate, IEC cannot be held responsible for the way in which they are used or for any misinterpretation by any end user.
4) In order to promote international uniformity, IEC National Committees undertake to apply IEC Publications transparently to the maximum extent possible in their national and regional publications. Any divergence between any IEC Publication and the corresponding national or regional publication shall be clearly indicated in the latter.
5) IEC itself does not provide any attestation of conformity. Independent certification bodies provide conformity assessment services and, in some areas, access to IEC marks of conformity. IEC is not responsible for any services carried out by independent certification bodies.
6) All users should ensure that they have the latest edition of this publication.
7) No liability shall attach to IEC or its directors, employees, servants or agents including individual experts and members of its technical committees and IEC National Committees for any personal injury, property damage or other damage of any nature whatsoever, whether direct or indirect, or for costs (including legal fees) and expenses arising out of the publication, use of, or reliance upon, this IEC Publication or any other IEC Publications.
8) Attention is drawn to the Normative references cited in this publication. Use of the referenced publications is indispensable for the correct application of this publication.
9) IEC draws attention to the possibility that the implementation of this document may involve the use of (a) patent(s). IEC takes no position concerning the evidence, validity or applicability of any claimed patent rights in respect thereof. As of the date of publication of this document, IEC had not received notice of (a) patent(s), which may be required to implement this document. However, implementers are cautioned that this may not represent the latest information, which may be obtained from the patent database available at https://patents.iec.ch. IEC shall not be held responsible for identifying any or all such patent rights.

IEC TS 61496-5 has been prepared by IEC technical committee 44: Safety of machinery – Electrotechnical aspects. It is a Technical Specification.

The text of this Technical Specification is based on the following documents:

Draft	Report on voting
44/986/DTS	44/1007/RVDTS

Full information on the voting for its approval can be found in the report on voting indicated in the above table.

The language used for the development of this Technical Specification is English.

Documents
Document Sharing Hub

This document was drafted in accordance with ISO/IEC Directives, Part 2, and developed in accordance with ISO/IEC Directives, Part 1 and ISO/IEC Directives, IEC Supplement, available at www.iec.ch/members_experts/refdocs. The main document types developed by IEC are described in greater detail at www.iec.ch/publications.

This document is to be used in conjunction with IEC 61496-1:2020.

This document supplements or modifies the corresponding clauses in IEC 61496-1:2020 to specify particular requirements for the design, construction and testing of electro-sensitive protective equipment (ESPE) for the safeguarding of machinery, employing radar protective devices (RPDs) responsive to diffuse reflection for the sensing function.

Where a particular clause or subclause of IEC 61496-1:2020 is not mentioned in this document, that clause or subclause applies as far as is reasonable. Where this document states "*Addition*", "*Modification*" or "*Replacement*", the relevant text of IEC 61496-1:2020 is adapted accordingly.

Clauses and subclauses which are additional to those of IEC 61496-1:2020 are numbered sequentially, following on the last available number in IEC 61496-1:2020. Terminological entries (in Clause 3) which are additional to those in IEC 61496-1:2020 are numbered starting from 3.501. Additional annexes are lettered from AA onwards and additional tables are numbered with prefix 5.

A list of all the parts in the IEC 61496 series, published under the general title *Safety of machinery – Electro-sensitive protective equipment*, can be found on the IEC website.

The committee has decided that the contents of this document will remain unchanged until the stability date indicated on the IEC website under webstore.iec.ch in the data related to the specific document. At this date, the document will be

- reconfirmed,
- withdrawn,
- replaced by a revised edition, or
- amended.

IMPORTANT – The "colour inside" logo on the cover page of this document indicates that it contains colours which are considered to be useful for the correct understanding of its contents. Users should therefore print this document using a colour printer.

Documents
Document Sharing Hub

Full document details: IEC TS 61496-5-2023

INTRODUCTION

Electro-sensitive protective equipment (ESPE) is applied to machinery presenting a risk of personal injury. It provides protection by causing the machine to revert to a safe condition before a person can be placed in a hazardous situation.

Each type of machine presents its own particular hazards, and it is not the purpose of this document to recommend the manner of application of the ESPE to any particular machine. The application of the ESPE is a matter for agreement between the equipment supplier, the machine user and the enforcing authority. In this context, attention is drawn to the relevant guidance established internationally, for example, IEC 62046 and ISO 12100.

Due to the complexity of the technology, there are many issues that are highly dependent on analysis and expertise in specific test and measurement techniques. In order to provide a high level of confidence, independent review by relevant expertise is recommended.

Differences between worldwide frequency allocation can affect some tests due to national regulations.

Documents
Document Sharing Hub
Full document details: IEC TS 61496-5-2023

SAFETY OF MACHINERY – ELECTRO-SENSITIVE PROTECTIVE EQUIPMENT –

Part 5: Particular requirements for radar-based protective devices

1 Scope

Replacement:

This part of IEC 61496 provides particular requirements for the design, construction and testing of non-contact electro-sensitive protective equipment (ESPE) designed specifically to provide whole-body detection of a person or persons as part of a safety-related system, employing radar protective devices (RPDs) responsive to diffuse reflection of radar signals for the sensing function using frequency-modulated continuous-wave (FMCW) technique. Special attention is directed to features which ensure that an appropriate safety-related performance is achieved. An ESPE can include optional safety-related functions, the requirements for which are given in Annex A of IEC 61496-1:2020 and Annex A of this document.

The requirements given in this document are related to the detection of adult persons being present in an industrial manufacturing environment.

This document does not specify the dimensions or configurations of the detection zone and its disposition in relation to hazardous parts for any particular application, nor what constitutes a hazardous state of any machine. It is restricted to the functioning of the ESPE and how it interfaces with the machine.

This document does not consider the aspects of a moving RPD application. Additional consideration can be necessary, if the RPD supplier specifies the RPD for use on moving application.

Additional requirements and tests can apply if setup of the RPD differs from Figure 2 and Figure 4.

NOTE The Radar cross-section stated in this document is based on measurements using horizontal arrangements.

Where this document does not contain all necessary provisions, IEC TS 62998-1 is used.

For those aspects not considered in this document it is also possible to additionally use provisions from IEC TS 62998-1.

Excluded from this document are RPDs that employ electromagnetic radiation outside the range 9 GHz to 81 GHz (identified as subset of band 10 and band 11 in accordance with ITU Radio Regulations). For sensing devices that employ electromagnetic radiation outside this range, this document can be used as a guide. National regulations can limit the available frequencies.

This document can be relevant to applications other than those for the protection of persons, for example for the protection of machinery or products from mechanical damage. In those applications, different requirements can be appropriate, for example when the materials to be recognized by the sensing function have different properties from those of persons.

This document does not deal with requirements for ESPE functions not related to the protection of persons (e.g. using sensing unit data for navigation).

Documents
Document Sharing Hub

Full document details: IEC TS 61496-5-2023

While a data interface can be used to control optional safety-related ESPE functions (Annex A), this document does not provide specific requirements. Requirements for these safety-related functions can be determined by consulting other standards (for example, IEC 61508, IEC 62046, IEC 62061, and ISO 13849-1).

This document does not deal with EMC emission requirements.

2 Normative references

Clause 2 of IEC 61496-1:2020 applies, except as follows.

Addition:

IEC 61496-1:2020, *Safety of machinery – Electro-sensitive protective equipment – Part 1: General requirements and tests*

3 Terms and definitions

Clause 3 of IEC 61496-1:2020 applies, except as follows.

Replacement of 3.3 and 3.4:

3.3
detection capability
sensing function parameter limit(s) specified by the supplier that will cause actuation of the RPD

Note 1 to entry: Detection capability of RPD is often described by the minimum detectable object radar cross section, which refers to its size, the angle and the object properties (e.g. reflectivity, geometry, distance, velocity, approaching angle).

Note 2 to entry: A list of influences which can affect the RPD detection capability is given in 4.2.12.1.

3.4
detection zone
zone within which the specified test target(s) is detected by the RPD with a minimum required probability of detection

Addition:

3.501
radar protective device
RPD
device whose sensing function is performed by radio wave emitting and receiving elements that detect the diffuse reflection of an object present in a detection zone

3.502
radar cross section
RCS
equivalent echoing area which is 4π times the ratio of the power per unit solid angle scattered in a specified direction to the power per unit area in a plane wave incident on the scatterer from a specified direction

Note 1 to entry: See Bibliography [1] chapter 2.

[SOURCE: ISO 8729-2:2009, 3.3, modified – Note 1 to entry has been replaced.]

Documents
Document Sharing Hub

Full document details: IEC TS 61496-5-2023

3.503
FMCW
frequency-modulated continuous-wave

3.504
static residual movement
micro movement associated with a non-moving person (e.g. chest displacement during breathing)

Note 1 to entry: For additional information, see Bibliography [2].

3.505
basic test distance
BTD
radial distance from the supplier-specified origin of distance measurement on an RPD to the test target during the test performed

3.506
basic test angle
BTA
angle from the RPD's centre axis, specified by the supplier, at which the test target is placed during the tests performed

3.507
tolerance zone
zone outside of and adjacent to the detection zone and the zone with limited position accuracy within which the specified test target(s) is detected with a probability of detection lower than the required probability within the detection zone

Note 1 to entry: The tolerance zone is necessary to achieve the required probability of detection of the specified test target(s) within the detection zone.

Note 2 to entry: For explanation of the concept of probability of detection and the tolerance zone, see Annex BB.

Note 3 to entry: Test targets are specified in 4.2.13.

3.508
zone with limited position accuracy
zone, between the surface of RPD and the beginning of the detection zone, where the stated position accuracy is not ensured

[SOURCE: IEC 61496-3:2018, 3.310, modified – In the term, "detection capability" has been replaced with "position accuracy". In the definition, "optical windows" has been replaced with "surface of RPD", "detection capability" has been replaced with "stated position accuracy", and "achieved" has been replaced with "ensured".]

3.509
centre axis
line through the origin of distance measurement and the centre of the maximum detection zone stated by the supplier

[SOURCE: IEC 61496-3:2018, 3.305]

Documents
Document Sharing Hub
Full document details: IEC TS 61496-5-2023

4 Functional, design and environmental requirements

Clause 4 of IEC 61496-1:2020 applies, except as follows.

4.1 Functional requirements

4.1.1 Normal operation

Replacement:

Normal operation is the state of an RPD where no faults are detected and where the OSSD(s) are allowed to be in the ON-state or the OFF-state depending on the state of the sensing function and operating mode.

In normal operation, the RPD shall respond by giving (an) appropriate output signal(s) when a test target representing the detection capability enters or is in the detection zone.

The RPD response time shall not exceed that stated by the supplier. No means of adjustment of the response time shall be possible without the use of a key, keyword or tool.

4.1.3 Types of ESPE

Replacement:

In this document only a Type 3 ESPE is considered.

A Type 3 ESPE shall fulfil the fault detection requirements of 4.2.2.4 of this document. In normal operation, the output circuit of each of at least two output signal switching devices (OSSD(s)) of the type 3 ESPE shall go to the OFF-state when the sensing function is actuated, or when the power is removed from the device.

It is the responsibility of the machine supplier and/or the user to specify which type is required for a particular application.

When a single safety-related data interface is used to perform the functions of the OSSD(s), then the data interface and associated safety-related communication interface shall meet the requirements of 4.2.4.4 of IEC 61496-1:2020. In this case, a single safety-related data interface can substitute for two OSSD(s) in a Type 3 ESPE.

Addition:

4.1.6 Zone with limited position accuracy

The RPD may have a zone where the detection is ensured but the position accuracy is not ensured. This zone starts at the RPD front surface and ends at the minimum detection zone stated by the supplier.

Dimensions of the zone with limited position accuracy and appropriate information for use shall be provided by the supplier.

The supplier shall ensure that the specified targets are detected in the zone with limited position accuracy and that the zone with limited position accuracy shall not vary over time.

These requirements shall be verified by analysis and by tests in 5.4.7.2.1

Documents
Document Sharing Hub

Full document details: IEC TS 61496-5-2023

4.2 Design requirements

4.2.2 Fault detection requirements

Replacement:

4.2.2.2 Particular requirements for a type 1 ESPE

4.2.2.2 of IEC 61496-1:2020 does not apply.

4.2.2.3 Particular requirements for a type 2 ESPE

4.2.2.3 of IEC 61496-1:2020 does not apply.

4.2.2.4 Particular requirements for a type 3 ESPE

Replacement:

A single fault in the sensing device resulting in a complete loss of the stated ESPE detection capability shall cause the ESPE to go to a lock-out condition within the specified response time.

A single fault resulting in a deterioration of the stated ESPE detection capability shall cause the ESPE to go to a lock-out condition within a time period of 5 s following the occurrence of that fault.

NOTE Examples of deterioration of the ESPE detection capability can include:

– the increase of the minimum detectable radar cross section (RCS);
– the decrease of the signal-to-noise ratio (S/N);
– the decrease of position accuracy.

A single fault resulting in an increase in response time beyond the specified value or preventing at least one OSSD going to the OFF-state shall cause the ESPE to go to a lock-out condition within the response time, or immediately upon any of the following demand events where fault detection requires a change in state:

– on actuation of the sensing function;
– on power off/on;
– on reset of the start interlock or the restart interlock, if available (see Clauses A.5 and A.6 of IEC 61496-1:2020);
– on the application of an external test signal, if available.

In cases where a single fault which in itself does not cause a failure to danger is not detected, the occurrence of one additional fault shall not cause a failure to danger. For verification of this requirement, see 5.3.4.

An external test signal can be required if, for example, in a particular application, the frequency of actuation of the sensing function is foreseeably low and the OSSD(s) are monitored only at the change of state.

The occurrence of single faults shall be considered by analysis and/or test with each of the following conditions and throughout the entire detection zone:

– environmental conditions specified in 4.3;
– at the limits of alignment and/or adjustment if applicable.

4.2.2.5 Particular requirements for a type 4 ESPE

4.2.2.5 of IEC 61496-1:2020 does not apply.

Documents
Document Sharing Hub
Full document details: IEC TS 61496-5-2023

Replacement:

4.2.12 Integrity of the RPD detection capability

4.2.12.1 General

The design of the RPD shall ensure that the detection capability as specified by the supplier is not degraded by any of, but not limited to, the following influences:

a) Interference with objects in the detection zone;
b) Interference with objects outside the detection zone;
c) Velocity of test target movement;
d) Size and shape of the detection zone;
e) Calibration (where applicable);
f) Properties and/or limitations of the emitting/receiving element, and signal processing, for example the following:
    1) Signal noise;
    2) Dynamic range;
    3) Sensitivity and uniformity;
    4) Antenna pattern;
    5) Change of characteristics;
g) Coexistence of several RPDs where the detection capability could be influenced by other RPDs;
h) Component ageing;
i) Environmental factors, for example the following:
    1) Humidity/condensation;
    2) Moisture;
    3) Dust;
    4) Floor material;
    5) Temperature;
j) Production wastes in the environment of use of the RPDs, for example the following:
    1) Wood chips;
    2) Metal chips;
    3) Debris;
    4) Smoke;
    5) Steam;
    6) Water;
k) Influence on detection capability of a single RPD due to multiple test targets inside the configured detection zone(s).

4.2.12.2 Detection zone(s) and tolerance zone(s)

The supplier shall take into account worst-case conditions including, for example, signal-to-noise ratio S/N and standard deviation σ considering all influences listed in this document and any additional influences specified by the supplier (environmental influence, component faults, multi-path reflections, etc.).

The supplier shall specify the relevant parameters of the detection zone(s), including operating distance and angles (azimuth and elevation). The geometry shall be sufficient to ensure that a test target is detected at the maximum operating distance.

AVA Documents
Document Sharing Hub

Full document details: IEC TS 61496-5-2023

All points on a path projected from any point on the border of the detection zone(s) to the receiving element(s) of the RPD shall be within the detection zone or the zone with limited position accuracy (see 4.1.6).

The supplier shall specify the position and dimension of the tolerance zone(s).

The tolerance zone depends on systematic influences, measurement faults, resolution of the measurement values, etc. and is necessary to ensure the required detection probability within the detection zone.

The test target (see 4.2.13) shall be detected with a minimum probability of detection of 1×10^{-7} to $2{,}9 \times 10^{-7}$ throughout the detection zone(s).

To achieve this minimum probability of detection, the tolerance zones are added to the detection zone and to the zone with limited position accuracy (see Figure 1).

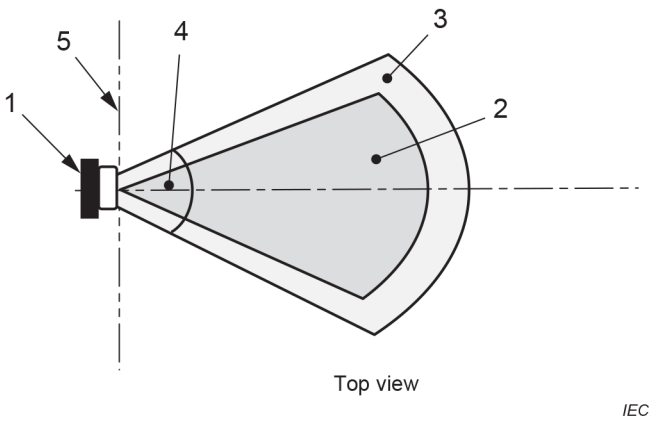

Key

1 – RPD
2 – detection zone
3 – tolerance zone
4 – zone with limited position accuracy
5 – origin of distance measurement

Figure 1 – Definition of zones inside field of view of an RPD

NOTE Information on probability of detection calculation methodology is available in Annex BB.

4.2.12.3 Influence of detection

Targets of minimum detectable RCS that are either stationary or moving within the detection zone at any speed of up to 1,6 m/s shall be detected by the RPD within the specified response time.

This requirement is verified by the test 5.2.3.3 for moving targets and by the test 5.2.3.5 for stationary targets.

NOTE 1 A stationary person still has static residual movement.

The response time shall be determined by the supplier, taking into account worst-case conditions and the movement of the target. Where the supplier states that an RPD can be used to detect the target moving at speeds greater than 1,6 m/s, the requirements shall be met at any speed up to and including the stated maximum speed.

NOTE 2 The speed range up to 1,6 m/s is considered as being representative for a walking person.

Documents
Document Sharing Hub
Full document details: IEC TS 61496-5-2023

4.2.12.4 Minimum detection zone(s)

The supplier shall specify the minimum detection zone(s), taking into account the conditions as described in 4.2.12.3.

4.2.12.5 Sensitivity

To verify the sensitivity, the RPD shall pass the test described in 5.2.11.

4.2.12.6 Position accuracy

The supplier shall determine the position accuracy and shall identify influences to be taken into account; for example, algorithms; antenna design; calibration of the RPD; number of transmitting and receiving channels; environmental conditions.

Replacement:

4.2.13 Test targets for type testing

4.2.13.1 General

The test targets are part of the RPD and shall therefore be provided by the supplier for use in the type tests of Clause 5. They shall be marked with a type reference and identification of the RPD with which they are intended to be used.

Other test targets may be used, providing they give equivalent results for testing detection capability and integrity of detection.

Where the term “test piece” is referenced in IEC 61496-1:2020, a test target in accordance with this document shall be used.

4.2.13.2 Corner reflector test target

The corner reflector test target shall be a trihedral corner reflector with an effective radar cross-section of 0,17 m^2 and shall be used for type testing in accordance with Clause 5.

NOTE 1 See Annex CC for more information about the manufacturing of a corner reflector.

NOTE 2 The RCS of 0,17 m^2 is considered as being representative for the 99 percentile value of an adult human being in accordance with ISO 7250-1 [3]. See Bibliography [4][1].

4.2.13.3 Articulated pedestrian test target

The pedestrian test target shall approximate the radar cross section of an adult person with dimensions based on ISO 7250-1 [3] and shall be used for type testing in accordance with Clause 5.

NOTE See Bibliography [5] for more information about the characteristics of the articulated pedestrian test target. The sizes represent a 50 % RAMSIS Bodybuilder based on the RAMSIS version 3.8.30 with a height of 1 800 mm.

4.2.13.4 Interfering test target

The interfering test target shall be a trihedral corner reflector with an effective radar cross-section of, at least, 40 m^2, and shall be used for type testing in accordance with Clause 5.

NOTE 1 See Annex CC for more information about the manufacturing of a corner reflector.

[1] Numbers in square brackets refer to the Bibliography.

Documents
Document Sharing Hub
Full document details: IEC TS 61496-5-2023

NOTE 2 The RCS of 40 m^2 is considered as being representative of large metallic objects (e.g. forklift) or multiple targets moving close together.

Addition:

4.2.14 Radiation frequencies

RPDs shall operate in the frequency range included between 9 GHz and 81 GHz.

4.2.15 Radiation intensity

The radiation intensity generated and emitted by the RPD shall at no time exceed the power or energy levels corresponding to maximum human exposure to non-ionizing radiation.

NOTE 1 It is the responsibility of the user to be aware of the applicable national and local regulations concerning the power or energy levels corresponding to maximum human exposure to non-ionizing radiation.

NOTE 2 Examples are given in IEC 62479:2010 [6] and EN 50364:2018 [7].

4.2.16 Mechanical construction

When the detection capability can be degraded below the limit stated by the supplier, as a result of a change of position of components, the fixing of those components shall not rely solely on friction.

NOTE The use of oblong mounting holes without additional means could lead, for example, to a change of the position of the detection zone under mechanical influence such as shock.

4.3 Environmental requirements

4.3 of IEC 61496-1:2020 applies, except as follows.

Replacement:

4.3.5 Radio interference

4.3.5.1 Interference from other radio sources

The RPD shall not fail to danger when subject to electromagnetic disturbances in the same frequency band.

The RPD shall not fail to danger when subject to electromagnetic disturbances in the frequency bands of 9 GHz to 81 GHz that are shown to be critical as a result of the analysis of the design and these frequency bands are relevant for the application.

NOTE Examples of electromagnetic disturbances in the same frequency band include:

– disturbances from other radio sources (e.g. door access points, radio link);
– interference from a continuous wave (CW) emitting source;
– interference from radar devices operating in the same occupied bandwidth but with different modulation parameters (e.g. different chirp parameters);
– intermodulation or image frequency.

These requirements shall be verified by the tests in 5.4.6.1.

4.3.5.2 Interference from RPD of identical design

The RPD shall not fail to danger when subject to radiation from other RPDs of identical design.

NOTE This can also be referred to as coexistence of similar RPDs.

Documents
Document Sharing Hub
Full document details: IEC TS 61496-5-2023