INTERNATIONAL STANDARD

ISO/IEEE 11073-10101

First edition
2004-12-15

AMENDMENT 1
2017-10

Health informatics — Point-of-care medical device communication —

Part 10101: **Nomenclature**

AMENDMENT 1: Additional definitions

Informatique de santé — Communication entre dispositifs médicaux sur le site des soins —

Partie 10101: Nomenclature

AMENDEMENT 1: Définitions supplementaires

Reference number
ISO/IEEE 11073-10101:2004/Amd 1:2017(E)

© IEEE 2015

Authorized licensed use limited to: Tsinghua University. Downloaded on February 24,2026 at 08:08:34 UTC from IEEE Xplore. Restrictions apply.

Full document details: IEEE 11073-10101-2004/Amd 1-2017

COPYRIGHT PROTECTED DOCUMENT

© IEEE 2015

All rights reserved. Unless otherwise specified, no part of this publication may be reproduced or utilized otherwise in any form or by any means, electronic or mechanical, including photocopying, or posting on the internet or an intranet, without prior written permission. Permission can be requested from IEEE at the address below.

ISO copyright office
Ch. de Blandonnet 8 • CP 401
CH-1214 Vernier, Geneva, Switzerland
Tel. +41 22 749 01 11
Fax +41 22 749 09 47
copyright@iso.org
www.iso.org

Institute of Electrical and Electronics Engineers, Inc
3 Park Avenue, New York
NY 10016-5997, USA

stds.ipr@ieee.org
www.ieee.org

© IEEE 2015 – All rights reserved
Authorized licensed use limited to: Tsinghua University. Downloaded on February 24,2026 at 08:08:34 UTC from IEEE Xplore. Restrictions apply.
Documents
Document Sharing Hub
Full document details: IEEE 11073-10101-2004/Amd 1-2017

Foreword

ISO (the International Organization for Standardization) is a worldwide federation of national standards bodies (ISO member bodies). The work of preparing International Standards is normally carried out through ISO technical committees. Each member body interested in a subject for which a technical committee has been established has the right to be represented on that committee. International organizations, governmental and non-governmental, in liaison with ISO, also take part in the work. ISO collaborates closely with the International Electrotechnical Commission (IEC) on all matters of electrotechnical standardization.

IEEE Standards documents are developed within the IEEE Societies and the Standards Coordinating Committees of the IEEE Standards Association (IEEE-SA) Standards Board. The IEEE develops its standards through a consensus development process, approved by the American National Standards Institute, which brings together volunteers representing varied viewpoints and interests to achieve the final product. Volunteers are not necessarily members of the Institute and serve without compensation. While the IEEE administers the process and establishes rules to promote fairness in the consensus development process, the IEEE does not independently evaluate, test, or verify the accuracy of any of the information contained in its standards.

The main task of technical committees is to prepare International Standards. Draft International Standards adopted by the technical committees are circulated to the member bodies for voting. Publication as an International Standard requires approval by at least 75 % of the member bodies casting a vote.

Attention is called to the possibility that implementation of this standard may require the use of subject matter covered by patent rights. By publication of this standard, no position is taken with respect to the existence or validity of any patent rights in connection therewith. ISO/IEEE is not responsible for identifying essential patents or patent claims for which a license may be required, for conducting inquiries into the legal validity or scope of patents or patent claims or determining whether any licensing terms or conditions provided in connection with submission of a Letter of Assurance or a Patent Statement and Licensing Declaration Form, if any, or in any licensing agreements are reasonable or non-discriminatory. Users of this standard are expressly advised that determination of the validity of any patent rights, and the risk of infringement of such rights, is entirely their own responsibility. Further information may be obtained from ISO or the IEEE Standards Association.

Amendment 1 to ISO/IEEE 11073-10101:2004/Amd 1:2017 was prepared by the 11073 Committee of the Engineering in Medicine and Biology Society of the IEEE (as IEEE 11073-10101:2004). It was adopted by Technical Committee ISO/TC 215, *Health informatics*, in parallel with its approval by the ISO/IEC national bodies, under the “fast-track procedure” defined in the Partner Standards Development Organization cooperation agreement between ISO and IEEE. IEEE is responsible for the maintenance of this document with participation and input from ISO/IEC national bodies.

Documents
Document Sharing Hub

© IEEE 2015 – All rights reserved

Authorized licensed use limited to: Tsinghua University. Downloaded on February 24,2026 at 08:08:34 UTC from IEEE Xplore. Restrictions apply.

Full document details: IEEE 11073-10101-2004/Amd 1-2017

Documents
Document Sharing Hub
Authorized licensed use limited to: Tsinghua University. Downloaded on February 24,2026 at 08:08:34 UTC from IEEE Xplore. Restrictions apply.
Full document details: IEEE 11073-10101-2004/Amd 1-2017

IEEE Std 11073-10101a™-2015
(Amendment to
ISO/IEEE 11073-10101:2004)

Health informatics—Point-of-care medical device communication

Part 10101: Nomenclature

Amendment 1: Additional Definitions

Sponsor

IEEE 11073™ Standards Committee
of the
IEEE Engineering in Medicine and Biology Society

Approved 5 December 2015

IEEE-SA Standards Board

Documents
Document Sharing Hub

Authorized licensed use limited to: Tsinghua University. Downloaded on February 24,2026 at 08:08:34 UTC from IEEE Xplore. Restrictions apply.

Full document details: IEEE 11073-10101-2004/Amd 1-2017

Abstract: Within the context of the ISO/IEEE 11073 family of standards for point-of-care (POC) medical device communication (MDC), the nomenclature defined by the base ISO/IEEE 11073-10101:2004 nomenclature standard is extended by this amendment. Significant extensions to support haemodynamics, respiration, ventilation and anesthesia monitoring, blood gas, urine, fluid-related metrics, and neurology, as well as units of measurements and measurement sites, are included. Formal definitions for observation identifiers used by the IEEE 11073 Personal Health Device standards and additional attributes for reporting their regulatory and certification status are also captured and provided. Information attributes to support alert communication and accurate medical device time synchronization and timekeeping are also defined.

Keywords: alert communication, anesthesia, blood gas, codes, Continua, fluid-related metrics, haemodynamics, IEEE 11073-10101a, IHE PCD, information model, ISO/IEEE 11073-10101, measurement sites, medical device certification, medical device communication, neurology, nomenclature, NTP, ontology, patient, PCHA, Personal Connected Health Alliance, POC, point-of-care, respiration, semantics, service model, terminology, time synchronization, timekeeping, units of measure, urine, ventilation

The Institute of Electrical and Electronics Engineers, Inc.
3 Park Avenue, New York, NY 10016-5997, USA

Copyright © 2015 by The Institute of Electrical and Electronics Engineers, Inc.
All rights reserved. Published 9 December 2015. Printed in the United States of America.

IEEE is a registered trademark in the U.S. Patent & Trademark Office, owned by The Institute of Electrical and Electronics Engineers, Incorporated.

PDF: ISBN 978-1-5044-0119-7 STD20525
Print: ISBN 978-1-5044-0120-3 STDPD20525

IEEE prohibits discrimination, harassment and bullying. For more information, visit http://www.ieee.org/web/aboutus/whatis/policies/p9-26.html.
No part of this publication may be reproduced in any form, in an electronic retrieval system or otherwise, without the prior written permission of the publisher.

Documents
Document Sharing Hub

Authorized licensed use limited to: Tsinghua University. Downloaded on February 24,2026 at 08:08:34 UTC from IEEE Xplore. Restrictions apply.

Full document details: IEEE 11073-10101-2004/Amd 1-2017

Important Notices and Disclaimers Concerning IEEE Standards Documents

IEEE documents are made available for use subject to important notices and legal disclaimers. These notices and disclaimers, or a reference to this page, appear in all standards and may be found under the heading "Important Notice" or "Important Notices and Disclaimers Concerning IEEE Standards Documents."

Notice and Disclaimer of Liability Concerning the Use of IEEE Standards Documents

IEEE Standards documents (standards, recommended practices, and guides), both full-use and trial-use, are developed within IEEE Societies and the Standards Coordinating Committees of the IEEE Standards Association ("IEEE-SA") Standards Board. IEEE ("the Institute") develops its standards through a consensus development process, approved by the American National Standards Institute ("ANSI"), which brings together volunteers representing varied viewpoints and interests to achieve the final product. Volunteers are not necessarily members of the Institute and participate without compensation from IEEE. While IEEE administers the process and establishes rules to promote fairness in the consensus development process, IEEE does not independently evaluate, test, or verify the accuracy of any of the information or the soundness of any judgments contained in its standards.

IEEE does not warrant or represent the accuracy or content of the material contained in its standards, and expressly disclaims all warranties (express, implied and statutory) not included in this or any other document relating to the standard, including, but not limited to, the warranties of: merchantability; fitness for a particular purpose; non-infringement; and quality, accuracy, effectiveness, currency, or completeness of material. In addition, IEEE disclaims any and all conditions relating to: results; and workmanlike effort. IEEE standards documents are supplied "AS IS" and "WITH ALL FAULTS."

Use of an IEEE standard is wholly voluntary. The existence of an IEEE standard does not imply that there are no other ways to produce, test, measure, purchase, market, or provide other goods and services related to the scope of the IEEE standard. Furthermore, the viewpoint expressed at the time a standard is approved and issued is subject to change brought about through developments in the state of the art and comments received from users of the standard.

In publishing and making its standards available, IEEE is not suggesting or rendering professional or other services for, or on behalf of, any person or entity nor is IEEE undertaking to perform any duty owed by any other person or entity to another. Any person utilizing any IEEE Standards document, should rely upon his or her own independent judgment in the exercise of reasonable care in any given circumstances or, as appropriate, seek the advice of a competent professional in determining the appropriateness of a given IEEE standard.

IN NO EVENT SHALL IEEE BE LIABLE FOR ANY DIRECT, INDIRECT, INCIDENTAL, SPECIAL, EXEMPLARY, OR CONSEQUENTIAL DAMAGES (INCLUDING, BUT NOT LIMITED TO: PROCUREMENT OF SUBSTITUTE GOODS OR SERVICES; LOSS OF USE, DATA, OR PROFITS; OR BUSINESS INTERRUPTION) HOWEVER CAUSED AND ON ANY THEORY OF LIABILITY, WHETHER IN CONTRACT, STRICT LIABILITY, OR TORT (INCLUDING NEGLIGENCE OR OTHERWISE) ARISING IN ANY WAY OUT OF THE PUBLICATION, USE OF, OR RELIANCE UPON ANY STANDARD, EVEN IF ADVISED OF THE POSSIBILITY OF SUCH DAMAGE AND REGARDLESS OF WHETHER SUCH DAMAGE WAS FORESEEABLE.

Translations

The IEEE consensus development process involves the review of documents in English only. In the event that an IEEE standard is translated, only the English version published by IEEE should be considered the approved IEEE standard.

Documents
Document Sharing Hub

Authorized licensed use limited to: Tsinghua University. Downloaded on February 24,2026 at 08:08:34 UTC from IEEE Xplore. Restrictions apply.

Full document details: IEEE 11073-10101-2004/Amd 1-2017

Official statements

A statement, written or oral, that is not processed in accordance with the IEEE-SA Standards Board Operations Manual shall not be considered or inferred to be the official position of IEEE or any of its committees and shall not be considered to be, or be relied upon as, a formal position of IEEE. At lectures, symposia, seminars, or educational courses, an individual presenting information on IEEE standards shall make it clear that his or her views should be considered the personal views of that individual rather than the formal position of IEEE.

Comments on standards

Comments for revision of IEEE Standards documents are welcome from any interested party, regardless of membership affiliation with IEEE. However, IEEE does not provide consulting information or advice pertaining to IEEE Standards documents. Suggestions for changes in documents should be in the form of a proposed change of text, together with appropriate supporting comments. Since IEEE standards represent a consensus of concerned interests, it is important that any responses to comments and questions also receive the concurrence of a balance of interests. For this reason, IEEE and the members of its societies and Standards Coordinating Committees are not able to provide an instant response to comments or questions except in those cases where the matter has previously been addressed. For the same reason, IEEE does not respond to interpretation requests. Any person who would like to participate in revisions to an IEEE standard is welcome to join the relevant IEEE working group.

Comments on standards should be submitted to the following address:

Secretary, IEEE-SA Standards Board
445 Hoes Lane
Piscataway, NJ 08854 USA

Laws and regulations

Users of IEEE Standards documents should consult all applicable laws and regulations. Compliance with the provisions of any IEEE Standards document does not imply compliance to any applicable regulatory requirements. Implementers of the standard are responsible for observing or referring to the applicable regulatory requirements. IEEE does not, by the publication of its standards, intend to urge action that is not in compliance with applicable laws, and these documents may not be construed as doing so.

Copyrights

IEEE draft and approved standards are copyrighted by IEEE under U.S. and international copyright laws. They are made available by IEEE and are adopted for a wide variety of both public and private uses. These include both use, by reference, in laws and regulations, and use in private self-regulation, standardization, and the promotion of engineering practices and methods. By making these documents available for use and adoption by public authorities and private users, IEEE does not waive any rights in copyright to the documents.

Photocopies

Subject to payment of the appropriate fee, IEEE will grant users a limited, non-exclusive license to photocopy portions of any individual standard for company or organizational internal use or individual, non-commercial use only. To arrange for payment of licensing fees, please contact Copyright Clearance Center, Customer Service, 222 Rosewood Drive, Danvers, MA 01923 USA; +1 978 750 8400. Permission to photocopy portions of any individual standard for educational classroom use can also be obtained through the Copyright Clearance Center.

Documents
Document Sharing Hub

Authorized licensed use limited to: Tsinghua University. Downloaded on February 24,2026 at 08:08:34 UTC from IEEE Xplore. Restrictions apply.

Full document details: IEEE 11073-10101-2004/Amd 1-2017

Updating of IEEE Standards documents

Users of IEEE Standards documents should be aware that these documents may be superseded at any time by the issuance of new editions or may be amended from time to time through the issuance of amendments, corrigenda, or errata. An official IEEE document at any point in time consists of the current edition of the document together with any amendments, corrigenda, or errata then in effect.

Every IEEE standard is subjected to review at least every ten years. When a document is more than ten years old and has not undergone a revision process, it is reasonable to conclude that its contents, although still of some value, do not wholly reflect the present state of the art. Users are cautioned to check to determine that they have the latest edition of any IEEE standard.

In order to determine whether a given document is the current edition and whether it has been amended through the issuance of amendments, corrigenda, or errata, visit the IEEE-SA Website at http://ieeexplore.ieee.org/xpl/standards.jsp or contact IEEE at the address listed previously. For more information about the IEEE SA or IEEE's standards development process, visit the IEEE-SA Website at http://standards.ieee.org.

Errata

Errata, if any, for all IEEE standards can be accessed on the IEEE-SA Website at the following URL: http://standards.ieee.org/findstds/errata/index.html. Users are encouraged to check this URL for errata periodically.

Patents

Attention is called to the possibility that implementation of this standard may require use of subject matter covered by patent rights. By publication of this standard, no position is taken by the IEEE with respect to the existence or validity of any patent rights in connection therewith. If a patent holder or patent applicant has filed a statement of assurance via an Accepted Letter of Assurance, then the statement is listed on the IEEE-SA Website at http://standards.ieee.org/about/sasb/patcom/patents.html. Letters of Assurance may indicate whether the Submitter is willing or unwilling to grant licenses under patent rights without compensation or under reasonable rates, with reasonable terms and conditions that are demonstrably free of any unfair discrimination to applicants desiring to obtain such licenses.

Essential Patent Claims may exist for which a Letter of Assurance has not been received. The IEEE is not responsible for identifying Essential Patent Claims for which a license may be required, for conducting inquiries into the legal validity or scope of Patents Claims, or determining whether any licensing terms or conditions provided in connection with submission of a Letter of Assurance, if any, or in any licensing agreements are reasonable or non-discriminatory. Users of this standard are expressly advised that determination of the validity of any patent rights, and the risk of infringement of such rights, is entirely their own responsibility. Further information may be obtained from the IEEE Standards Association.

Documents
Document Sharing Hub

Authorized licensed use limited to: Tsinghua University. Downloaded on February 24,2026 at 08:08:34 UTC from IEEE Xplore. Restrictions apply.

Full document details: IEEE 11073-10101-2004/Amd 1-2017

Participants

At the time this standard was submitted to the IEEE-SA Standards Board for approval, the Upper Layers Working Group had the following membership:

Jan Wittenber, *Chair*
Paul Schluter and Todd Cooper, *Vice Chairs*

Malcolm Clarke
Steven Dain
Kenneth Fuchs
Norman Jones
Kenneth Marks
John Rhoads
Jeff Rinda
Stefan Schlichting
John Walsh
Daidi Zhong

The following members of the individual balloting committee voted on this standard. Balloters may have voted for approval, disapproval, or abstention.

Susan Burgess
Keith Chow
Malcolm Clarke
Gion Durisch
Christoph Fischer
Kenneth Fuchs
John Garguilo
Joel Goergen
Randall Groves
Kai Hassing
Werner Hoelzl
Noriyuki Ikeuchi
Atsushi Ito
Piotr Karocki
Daniel Kraehenbuehl
Kenneth Marks
Melvin Reynolds
John Rhoads
Bartien Sayogo
Stefan Schlichting
Paul Schluter
Janek Schumann
Eugene Stoudenmire
Walter Struppler
John Walsh
J. Wiley
Jan Wittenber
Oren Yuen
Daidi Zhong

When the IEEE-SA Standards Board approved this standard on 5 December 2015, it had the following membership:

John D. Kulick, *Chair*
Jon Walter Rosdahl, *Vice Chair*
Richard H. Hulett, *Past Chair*
Konstantinos Karachalios, *Secretary*

Masayuki Ariyoshi
Ted Burse
Stephen Dukes
Jean-Philippe Faure
J. Travis Griffith
Gary Hoffman
Michael Janezic
Joseph L. Koepfinger*
David J. Law
Hung Ling
Andrew Myles
T. W. Olsen
Glenn Parsons
Ronald C. Petersen
Annette D. Reilly
Stephen J. Shellhammer
Adrian P. Stephens
Yatin Trivedi
Phillip Winston
Don Wright
Yu Yuan
Daidi Zhong

*Member Emeritus

Copyright © 2015 IEEE. All rights reserved.

Documents
Document Sharing Hub

Authorized licensed use limited to: Tsinghua University. Downloaded on February 24,2026 at 08:08:34 UTC from IEEE Xplore. Restrictions apply.

Full document details: IEEE 11073-10101-2004/Amd 1-2017

Introduction

This introduction is not part of IEEE Std 11073-10101a™-2015, Health informatics—Point-of-care medical device communication—Part 10101: Nomenclature—Amendment 1: Additional Definitions.

ISO/IEEE 11073 standards enable communication between medical devices and external computer systems. They provide automatic and detailed electronic data capture of patient vital signs information and device operational data. The primary goals are to:

— Provide real-time plug-and-play interoperability for patient-connected medical devices

— Facilitate the efficient exchange of vital signs and medical device data, acquired at the point-of-care, in all health care environments

This amendment extends the nomenclature originally defined by the base IEEE Std 11073-10101:2004 nomenclature standard. It reflects the continued innovation in medical device and system design for the past decade and is based on a highly successful collaboration with the following organizations:

— Integrating the Healthcare Enterprise (IHE) Patient Care Devices (PCD) domain

— Personal Connected Health Alliance (PCHA, formerly Continua Health Alliance)

— ISO/TC 121, Anaesthetic and respiratory equipment, Subcommittee 4, Terminology and semantics

In addition, other vendors and standards development and profiling organizations have contributed to and have recognized the value of this work and the benefit it provides to the user and provider communities and to the patients that we ultimately serve.

This nomenclature amendment includes significant extensions to support:

— haemodynamics

— respiratory, ventilation and anesthesia monitoring

— blood gas, urine, fluid chemistry and other fluid-related metrics

— neurology

— units of measurements and measurement sites

— new medical device types, including infant warmers and incubators

This amendment also provides:

— formal definitions for observation identifiers used by IEEE 11073 Personal Health Devices

— attributes for reporting medical device regulatory and certification status

— attributes to support alert communication

— attributes to support accurate medical device time synchronization and timekeeping

NOTES as used in this amendment (preceding editorial instructions) are not meant to be included in the rollup or part of the editorial instructions. They are used solely to provide informative guidance and background to the reader as to why certain changes were made.

Copyright © 2015 IEEE. All rights reserved.

Documents
Document Sharing Hub

Authorized licensed use limited to: Tsinghua University. Downloaded on February 24,2026 at 08:08:34 UTC from IEEE Xplore. Restrictions apply.

Full document details: IEEE 11073-10101-2004/Amd 1-2017

Contents

4. Terms and definitions 2

5. Symbols (and abbreviated terms) 2

Annex A (normative) Nomenclature semantics 4
A.5 Nomenclature, data dictionary, and codes for vital signs devices (Block A) 5
A.6 Terminology and codes for units of measurement (Block B) 8
A.7 Nomenclature, data dictionary, and codes for metrics (measurements and enumerations) (Block C) 14
A.7.3 Nomenclature and codes for hemodynamic monitoring measurements 14
A.7.4 Nomenclature and codes for respiratory, ventilator and anesthesia measurements 17
A.7.4.18 Gas concentration and partial pressure measurements 17
A.7.4.19 Inspiratory breath type classification 18
A.7.4.20 Nomenclature and code table 20
A.7.4.21 Nomenclature and codes for nebulizers 59
A.7.5 Nomenclature, data dictionary, and codes for common blood-gas, blood, urine, and other fluid chemistry measurements 61
A.7.8 Nomenclature, data dictionary, and codes for neurological monitoring measurements 64
A.7.11 Nomenclature and code extensions for miscellaneous measurements 66
A.7.11.7 Body Weight and Surface Area 67
A.7.12 Nomenclature and code extensions for infant incubator and warmer microenvironments 67
A.7.13 Nomenclature and code extensions for personal health devices 69
A.8 Nomenclature, data dictionary, and codes for body sites (Block D) 72
A.8.1 Sites for EEG-electrode placement on the head 72
A.11 Information attributes to support IHE PCD DEC and PCHA Continua WAN 73
A.11.1 Information attributes to support IHE PCD Alert Communication Management 73
A.11.2 Infrastructure attributes to support PCHA/Continua WAN and IHE PCD DEC 73
A.11.3 Information attributes to support PCHA/Continua WAN 74
A.11.4 Information attributes to support IHE PCD DEC and PCHA/Continua WAN timekeeping 75
A.11.5 Information attributes to support semantics defined by this standard 77

Annex C (normative) Terms and codes 78
C.1 Overview 78
C.2 Discriminator sets 78
C.3 Terms and discriminators 80

Annex D (informative) Breaths and inflations 97

Annex E (informative) Respiratory, ventilator, and anesthesia reference ID naming conventions 98

Annex F (informative) Anesthesia ventilation and breathing circuits 100
F.1 Bellows driven on expiratory side 102
F.2 Piston driven on inspiratory side 103
F.3 Mapleson circuits 104

Annex G (informative) Bibliography 105

Copyright © 2015 IEEE. All rights reserved.

Documents
Document Sharing Hub

Authorized licensed use limited to: Tsinghua University. Downloaded on February 24,2026 at 08:08:34 UTC from IEEE Xplore. Restrictions apply.

Full document details: IEEE 11073-10101-2004/Amd 1-2017

Health informatics—Point-of-care medical device communication

Part 10101: Nomenclature

Amendment 1: Additional Definitions

IMPORTANT NOTICE: IEEE Standards documents are not intended to ensure safety, security, health, or environmental protection, or ensure against interference with or from other devices or networks. Implementers of IEEE Standards documents are responsible for determining and complying with all appropriate safety, security, environmental, health, and interference protection practices and all applicable laws and regulations.

This IEEE document is made available for use subject to important notices and legal disclaimers. These notices and disclaimers appear in all publications containing this document and may be found under the heading "Important Notice" or "Important Notices and Disclaimers Concerning IEEE Documents." They can also be obtained on request from IEEE or viewed at http://standards.ieee.org/IPR/disclaimers.html.

NOTE—The editing instructions contained in this **amendment** define how to merge the material contained therein into the existing base standard and its amendments to form the comprehensive standard.

The editing instructions are shown in ***bold italic***. Four editing instructions are used: change, delete, insert, and replace. ***Change*** is used to make corrections in existing text or tables. The editing instruction specifies the location of the change and describes what is being changed by using ~~strikethrough~~ (to remove old material) and underscore (to add new material). ***Delete*** removes existing material. ***Insert*** adds new material without disturbing the existing material. Insertions may require renumbering. If so, renumbering instructions are given in the editing instruction. ***Replace*** is used to make changes in figures or equations by removing the existing figure or equation and replacing it with a new one. Editing instructions, change markings, and this NOTE will not be carried over into future editions because the changes will be incorporated into the base standard.

Copyright © 2015 IEEE. All rights reserved.

Documents
Document Sharing Hub

Authorized licensed use limited to: Tsinghua University. Downloaded on February 24,2026 at 08:08:34 UTC from IEEE Xplore. Restrictions apply.

Full document details: IEEE 11073-10101-2004/Amd 1-2017

4. Terms and definitions

Replace the boilerplate paragraph (and its footnote) with the following sentence as shown. Renumber footnotes accordingly.

For the purposes of this document, the following terms and definitions apply. The *IEEE Standards Dictionary Online* should be consulted for terms not defined in this clause.[1]

Insert the following new terms and definitions in alphabetical order:

base term: A fundamental semantic concept.

co-constraint: A rule describing a constraint whose scope is inclusive of more than one term.

constraint: A restriction on the set of values being assigned.

discriminators: A mechanism to provide additional semantic refinement to multiple base terms.

domain information model (DIM): The model describing common concepts and relationships for a problem domain.

electronic health records: A longitudinal collection of electronic health information about individual patients or populations. It is a record in digital format that is capable of being shared within or across different health care settings by being embedded in network-connected enterprise-wide information system.

reference ID (REFID): A unique, symbolic, and programmatic form for the term. The form is correlated to the context-free code (i.e., terms are by definition context-free with respect to all other terms); in this standard, terms are prefixed with "MDC_" for consistency.

systematic name: An organization of differentiating, relational descriptors that are unique for each term.

terminology: A synonym for nomenclature.

5. Symbols (and abbreviated terms)

Insert the following abbreviated terms into the existing list, in alphabetical order:

aka	also known as
DIM	domain information model
ECG	electrocardiogram
HL7	Health Level Seven
ID	identifier

[1] IEEE Standards Dictionary Online subscription is available at:
http://www.ieee.org/portal/innovate/products/standard/standards_dictionary.html.

Copyright © 2015 IEEE. All rights reserved.

Documents
Document Sharing Hub

Authorized licensed use limited to: Tsinghua University. Downloaded on February 24,2026 at 08:08:34 UTC from IEEE Xplore. Restrictions apply.

Full document details: IEEE 11073-10101-2004/Amd 1-2017

IHE PCD	Integrating the Healthcare Enterprise Patient Care Devices
MDC	Medical Device Communication
PCHA	Personal Connected Health Alliance (formerly Continua Health Alliance)
PHD	IEEE 11073 Personal Health Device series of communication standards, including the IEEE Std 11073-20601 base standard and -104XX Device Specializations
REFID	IEEE 11073 reference identifier
typ	typical

Copyright © 2015 IEEE. All rights reserved.

Documents
Document Sharing Hub

Authorized licensed use limited to: Tsinghua University. Downloaded on February 24,2026 at 08:08:34 UTC from IEEE Xplore. Restrictions apply.

Full document details: IEEE 11073-10101-2004/Amd 1-2017

Annex A

(normative)

Nomenclature semantics

[*NOTES* in this amendment are not meant to be included in the rollup or part of the editorial instructions. They are used in this amendment solely to provide informative guidance and background to the reader as to why certain changes were made.]

***NOTE*—**This amendment extends the nomenclature defined by the base ISO/IEEE 11073-10101:2004 nomenclature standard. It includes significant extensions to support haemodynamics, respiration, ventilation and anesthesia monitoring, blood gas, urine, fluid-related metrics, and neurology, as well as specialized units of measurements and measurement sites. It also captures and provides formal definitions for observation identifiers used by the IEEE 11073 Personal Health Device standards and additional attributes for reporting their regulatory and certification status.

The nomenclature extensions may be used in other persistent storage and communication standards [e.g., Health Level Seven International (HL7) V2 and V3, and Digital Imaging and Communications in Medicine (DICOM)] for use by various applications, including clinical information systems, electronic patient records, and clinical research.

These enterprise-facing communication standards require that the IEEE 11073 concept of a ‘partition’ and ‘code’ be combined into a single 32-bit ‘context-free’ identifier, as part of a single Medical Device Communication (MDC) vocabulary identifier. In this amendment, the combined partition and code information is listed in the ‘Part::Code’ column, augmenting the earlier context-sensitive ‘Code’ column. This also facilitates aggregation and processing of medical device data defined in multiple IEEE 11073 partitions, such as advanced diagnostic electrocardiography, implanted devices, and personal health devices.

All new terms defined by this amendment express the context-free *Part::Code* identifiers without braces. Existing context-free from IEEE Std 11073-10101:2004 are enclosed in square braces [*Part::Code*] and ‘refid-synonyms’ are enclosed in wavy braces {*Part::Code*} terms. The braces indicate substantial equivalency to existing *Part::Code* identifiers and are used to identify terms that have been included for completeness or have been modified for clarity.

Copyright © 2015 IEEE. All rights reserved.

Documents
Document Sharing Hub

Authorized licensed use limited to: Tsinghua University. Downloaded on February 24,2026 at 08:08:34 UTC from IEEE Xplore. Restrictions apply.

Full document details: IEEE 11073-10101-2004/Amd 1-2017

A.5 Nomenclature, data dictionary, and codes for vital signs devices (Block A)

A.5.7 Code table

NOTE—This table includes vital signs devices from Annex B of IEEE Std 11073-10101:2004 that were not defined in Annex A and new vital signs devices. It does not include vital signs devices that were already defined in Annex A (codes 1::4100 to 1::4508, inclusive). All are assigned to the partition MDC_PART_OBJ (1).

Insert the following rows at the end of Table A.5.1 as shown:

Table A.5.1—Nomenclature and codes for vital signs devices *(continued)*

Systematic name	Common term	Description/Definition	Reference ID	Part::Code
Device | | | <type>	Generic device	Generic device, may be used as placeholder.	MDC_DEV	1::4096
Device, general | | | <type>	General device	Generic device, of any type.	MDC_DEV_GENERAL	1::5120
Device, auxiliary | | | <type>	Auxiliary device	Generic device, of any type.	MDC_DEV_AUX	1::5124
Device | ElectricalPotential, Respiration | Lung, transthoracic impedance | <type>	ECG-derived respiration	Instrument for the indirect measurement of respiration rate by estimating transthoracic impedance using the ECG leads.	MDC_DEV_ECG_RESP	1::5128
Device | ElectricalPotential | Heart, arrhythmia or conduction disturbance | <type>	ECG arrhythmia	Instrument for acquisition, analysis and detection of cardiac arrhythmias or conduction disturbances.	MDC_DEV_ARRHY	1::5132
Device | Pressure | Haemodynamic | <type>	Haemodynamic pulse rate	Instrument for acquisition, analysis and detection of haemodynamic pulse rate and other information.	MDC_DEV_PULS	1::5136
Device | ElectricalPotential | Heart, ST deviation and cardiac repolarization | <type>	ECG ST	Instrument for acquisition, analysis and detection of ST deviation and cardiac repolarization disturbances.	MDC_DEV_ST	1::5140
Analyzer | Concentration | Airway, CO2 | <type>	CO2 gas analyzer, capnometer, capnograph	Instrument for the direct measurement of airway CO2 concentration and respiration rate.	MDC_DEV_CO2	1::5144
Device | Pressure, non-invasive | Blood | <type>	Non-invasive blood pressure	Instrument for the non-invasive measurement of blood pressure.	MDC_DEV_PRESS_BLD_NONINV	1::5148
Device | Flow, perfusion | Blood, cerebral | <type>	Cerebral perfusion	Instrument for the measurement of the level of blood perfusion in cerebral tissue.	MDC_DEV_CEREB_PERF	1::5152
Device | Concentration or PartialPressure, CO2 | Continuous | <type>	Continuous CO2	Instrument for the direct and continuous measurement of CO2 concentration or partial pressure.	MDC_DEV_CO2_CTS	1::5156
Device | PartialPressure, pCO2 | Skin, surface | <type>	Transcutaneous pCO2	Instrument for the indirect measurement of pCO2 partial pressure on the surface of the skin.	MDC_DEV_CO2_TCUT	1::5160
Analyzer | Concentration | Airway, O2 | <type>	O2 gas analyzer	Instrument for the direct measurement of airway O2 concentration and respiration rate.	MDC_DEV_O2	1::5164
Device | Concentration or PartialPressure, O2 | Continuous | <type>	Continuous O2	Instrument for the direct and continuous measurement of O2 concentration or partial pressure.	MDC_DEV_O2_CTS	1::5168

Copyright © 2015 IEEE. All rights reserved.

Documents
Document Sharing Hub

Authorized licensed use limited to: Tsinghua University. Downloaded on February 24,2026 at 08:08:34 UTC from IEEE Xplore. Restrictions apply.

Full document details: IEEE 11073-10101-2004/Amd 1-2017

Table A.5.1—Nomenclature and codes for vital signs devices *(continued)*

Systematic name	Common term	Description/Definition	Reference ID	Part::Code
Device | PartialPressure, pO2 | Skin, surface | <type>	Transcutaneous pO2	Instrument for the indirect measurement of pO2 partial pressure on the surface of the skin.	MDC_DEV_O2_TCUT	1::5172
Meter | Temperature | Difference | <type>	Temperature difference probe	Instrument that measures temperature difference between two body sites or temperature reference.	MDC_DEV_TEMP_DIFF	1::5176
Controller | | | <type>	Generic controller	Instrument that controls specific aspects of a device.	MDC_DEV_CNTRL	1::5180
Alert | | | <type>	Generic alarm	Instrument that processes or annunciates an alarm.	MDC_DEV_AL	1::5184
Device | Pressure, Pulmonary Artery, Occluded | Blood | <type>	Pulmonary wedge pressure	Instrument for the direct measurement of the pulmonary artery wedge pressure.	MDC_DEV_WEDGE	1::5188
Analyzer | Concentration | Blood, Venous | <type>	SvO2 monitor	Instrument that derives the % of venous O2.	MDC_DEV_O2_VEN_SAT	1::5192
Device | Persistent Metric Store | | <type>	Data storage	Device that stores physiologic information.	MDC_DEV_PMSTORE	1::5196
Analyzer | Rate | Heart | <type>	Heart rate analyzer	Instrument for measuring the rate of heart contractions.	MDC_DEV_CARD_RATE	1::5200
Monitor | Vital Signs | Physiologic | <type>	Vital signs monitor	Instrument for direct measurement and analysis of vital signs such as temperature, pulse or heart rate, blood pressure and respiratory rate.	MDC_DEV_SYS_VS	1::5204
Monitor | Vital Signs, Configurable | Physiologic | <type>	Configurable (modular) vital signs monitor	Configurable (modular) instrument for direct measurement and analysis of vital signs.	MDC_DEV_SYS_VS_CONFIG	1::5208
Monitor | Vital Signs, Non-configurable | Physiologic | <type>	Non-configurable vital signs monitor	Non-configurable (fixed functionality) instrument for direct measurement and analysis of vital signs.	MDC_DEV_SYS_VS_UNCONFIG	1::5212
Alert | | Status | <type>	Generic alarm status indicator	Instrument displays alarm status.	MDC_DEV_AL_STAT	1::5216
Device, waveform | | | <type>	General waveform device	Generic waveform device, of any type.	MDC_DEV_WV_GENERAL	1::5220
Device, numeric | | | <type>	General numeric device	Generic numeric device, of any type.	MDC_DEV_NU_GENERAL	1::5224
Meter | Pressure | | <type>	Pressure meter or sensor	Instrument or sensor for the direct measurement of pressure	MDC_DEV_METER_PRESS	1::5228
Device | Flow, perfusion | Blood | <type>	Perfusion	Instrument for the measurement of blood perfusion.	MDC_DEV_ANALY_PERF_REL	1::5232
Device | Plethysmograph | | <type>	Plethysmograph	Instrument for measuring changes in volume within an organ or body part due to fluctuations in the amount of blood or air it contains.	MDC_DEV_PLETH	1::5236
Calculator | Multi-Parameter | Cardiac | <type>	Cardiac calculator	Instrument that derives cardiac parameters	MDC_DEV_CALC_CARD	1::5240
Calculator | Multi-Parameter | Pulmonary | <type>	Pulmonary calculator	Instrument that derives pulmonary parameters	MDC_DEV_CALC_PULM	1::5244
Calculator | Multi-Parameter, with estimates | Pulmonary | <type>	Pulmonary estimates calculator	Instrument that derives pulmonary parameters, where one or more inputs to the calculation may be clinically acceptable approximations or alternative values.	MDC_DEV_CALC_PULM_EST	1::5248
Analyzer | Concentration, O2 | Blood, Arterial | <type>	SpO2 monitor	Instrument that derives the % of arterial O2 and pulse rate parameters (blood flow) and other analytes.	MDC_DEV_ANALY_SAT_O2_ART	1::5252
Analyzer | Concentration, O2 | Blood, Venous | <type>	SvO2 monitor	Instrument that derives the % of venous O2.	MDC_DEV_ANALY_SAT_O2_VEN	1::5256

Copyright © 2015 IEEE. All rights reserved.

Authorized licensed use limited to: Tsinghua University. Downloaded on February 24,2026 at 08:08:34 UTC from IEEE Xplore. Restrictions apply.

Full document details: IEEE 11073-10101-2004/Amd 1-2017

Table A.5.1—Nomenclature and codes for vital signs devices *(continued)*

Systematic name	Common term	Description/Definition	Reference ID	Part::Code
Analyzer | Concentration, PgCO2 | Gastric, Mucosal | <type>	Gastric PgCO2 monitor	Instrument that measures gastric PgCO2 with tonometric catheters	MDC_DEV_ANALY_PCO2_GASTRIC	1::5260
Analyzer | ElectricalPotential, Bispectral Index | Brain | <type>	Bispectral Index	Instrument that measures the EEG and derives a "bispectral index", a computed EEG parameter.	MDC_DEV_EEG_BIS	1::5264
Analyzer | ElectricalPotential, Entropy | Brain | <type>	Entropy	Instrument that measures the EEG and derives an "entropy" index, a computed EEG parameter.	MDC_DEV_EEG_ENTROPY	1::5268
Analyzer | ElectricalPotential, SNAP Index | Brain | <type>	SNAP Index	Instrument that measures the EEG and derives an "SNAP" index, a computed EEG parameter.	MDC_DEV_EEG_SNAP	1::5272
Analyzer | ElectricalPotential, Patient State Index | Brain | <type>	Patient State Index	Instrument that measures the EEG and derives a "patient state index", a computed EEG parameter.	MDC_DEV_EEG_PSI	1::5276
Analyzer | Flow, Continuous | Blood | <type>	Continuous cardiac output	Instrument that continuously derives heart output from direct measurement of blood flow.	MDC_DEV_ANALY_CARD_OUTPUT_CTS	1::5280
Analyzer | Flow, Continuous, Non-invasive | Blood | <type>	Continuous non-invasive Cardiac Output	Instrument that derives heart output from direct measurement of blood flow.	MDC_DEV_ANALY_CARD_OUTPUT_NONINV	1::5284
Regulator | Microenvironment | Body, infant | <type>	Incubator, warmer, heater, humidifier	Instrument for modifying the ambient microenvironment for an infant, including skin temperature and ambient temperature, humidity and oxygen.	MDC_DEV_INFANT_MICROENV	1::5288
Regulator | Microenvironment, temperature | ambient | <type>	Incubator, warmer, heater.	Instrument for modifying the ambient temperature for an infant.	MDC_DEV_INFANT_MICROENV_TEMP_ENV	1::5292
Regulator | Microenvironment, temperature | patient | <type>	Incubator, warmer, heater.	Instrument for modifying the patient temperature for an infant.	MDC_DEV_INFANT_MICROENV_TEMP_PATIENT	1::5296
Regulator | Microenvironment, heater, convective | patient | <type>	Convective heater	Instrument for modifying the patient temperature using convective heating.	MDC_DEV_INFANT_MICROENV_HEATER_CONVECTIVE	1::5300
Regulator | Microenvironment, heater, radiant | patient | <type>	Radiant heater	Instrument for modifying the patient temperature using radiant heating.	MDC_DEV_INFANT_MICROENV_HEATER_RADIANT	1::5304
Analyzer | Concentration | Airway, N2 | <type>	N2 gas analyzer	Instrument for the direct measurement of airway N2 concentration.	MDC_DEV_N2	1::5308
Analyzer | Concentration | Airway, N2O | <type>	N2O gas analyzer	Instrument for the direct measurement of airway N2O concentration.	MDC_DEV_N2O	1::5312
Nebulizer | | | <type>	Nebulizer	Device that aerosolizes medications, diluents and water in airway gas for inhalation by patient.	MDC_DEV_NEBULIZER	1::5316
Device | ElectricalConductivity | Transthoracic conductance | <type>	Impedance cardiography	Instrument for the indirect measurement and estimation of cardiac and/or respiratory parameters by measuring the electrical conductivity of the thorax and its changes over time.	MDC_DEV_ICG	1::5320

Copyright © 2015 IEEE. All rights reserved.

Authorized licensed use limited to: Tsinghua University. Downloaded on February 24,2026 at 08:08:34 UTC from IEEE Xplore. Restrictions apply.

Full document details: IEEE 11073-10101-2004/Amd 1-2017

A.6 Terminology and codes for units of measurement (Block B)

A.6.4 Units of measurement

NOTE—A total of 137 new base units of measure have been defined; the decade scale factor replaces the _X_ in the Reference ID. These are assigned to the MDC_PART_DIM partition (4).

Insert the following rows at the end of Table A.6.3 as shown:

Table A.6.3—Vital signs units of measurement *(continued)*

Dimension	Unit of measurement	Symbol (not normative)	Reference ID	Part::Code
Boolean	«boolean»	1/0	MDC_DIM_BOOLEAN	4::7776
decibel (reference level)	decibel («magnitude» volt)	dB(V), dB(mV) …	MDC_DIM_DECIBEL_X_VOLT	4::7808
	decibel (10 «magnitude» volts)	dB(10V), dB(10mV) …	MDC_DIM_DECIBEL_10_X_VOLT	4::7840
	decibel (10 nV)	dB(10nV)	MDC_DIM_DECIBEL_10_NANO_VOLT	4::7860
	decibel («magnitude» watt)	dB(W), db(10mW) …	MDC_DIM_DECIBEL_X_WATT	4::7872
	square «magnitude» cm(s)	cm^2	MDC_DIM_SQ_X_CM	4::8032
	«magnitude» gram(s) per square meter	$g\ m^{-2}$	MDC_DIM_X_G_PER_M_SQ	4::7744
	per «magnitude» second squared	s^{-2}	MDC_DIM_PER_X_SEC_SQ	4::8064
	revolutions per minute	rpm	MDC_DIM_X_ROTATIONS_PER_MIN	4::8096
mass dose rate per body weight	«magnitude» drops(s) per minute	$drops\ min^{-1}$	MDC_DIM_X_DROPS_PER_MIN	4::8128
	«magnitude» gram(s) per pound per minute	$g\ lb^{-1}\ min^{-1}$	MDC_DIM_X_G_PER_LB_PER_MIN	4::6784
	«magnitude» gram(s) per pound per hour	$g\ lb^{-1}\ h^{-1}$	MDC_DIM_X_G_PER_LB_PER_HR	4::6752
mass dose rate per body surface area	«magnitude» gram(s) per square meter per minute	$g\ m^2\ min^{-1}$	MDC_DIM_X_G_PER_M_SQ_PER_MIN	4::6848
	«magnitude» gram(s) per square meter per hour	$g\ m^2\ h^{-1}$	MDC_DIM_X_G_PER_M_SQ_PER_HR	4::6816
	«magnitude» gram(s) per square meter per day	$g\ m^2\ d^{-1}$	MDC_DIM_X_G_PER_M_SQ_PER_DAY	4::7168
Compliance per body weight	«magnitude» liter per centimeter of water per body weight	$l\ (cmH_2O)^{-1}\ kg^{-1}$	MDC_DIM_X_L_PER_CM_H2O_PER_KG	4::8160
	«magnitude» Tesla (magnetic flux density)	$Wb\ m^{-2}$	MDC_DIM_X_TESLA	4::8192
	«magnitude» volt-seconds	V.s	MDC_DIM_X_VOLT_SEC	4::8224
	«magnitude» volts per second	V/s	MDC_DIM_X_VOLT_PER_SEC	4::8256
	per «magnitude» ohm(s) (*aka* "Siemens")	Ω^{-1}, S	MDC_DIM_PER_X_OHM	4::8288
mol dose rate per body surface area	«magnitude» mole(s) per square meter	$mol\ m^{-2}$	MDC_DIM_X_MOLE_PER_M_SQ	4::7552
	«magnitude» equivalents per kilogram	$eq\ kg^{-1}$	MDC_DIM_X_EQUIV_PER_KG	4::7584
	«magnitude» equivalents per square meter	$eq\ m^{-2}$	MDC_DIM_X_EQUIV_PER_M_SQ	4::7616

Copyright © 2015 IEEE. All rights reserved.

Authorized licensed use limited to: Tsinghua University. Downloaded on February 24,2026 at 08:08:34 UTC from IEEE Xplore. Restrictions apply.

Full document details: IEEE 11073-10101-2004/Amd 1-2017

Table A.6.3—Vital signs units of measurement *(continued)*

Dimension	Unit of measurement	Symbol (not normative)	Reference ID	Part::Code
mol dose rate per body surface area	«magnitude» mole(s) per square meter per second	mol m^{-2} s^{-1}	MDC_DIM_X_MOLE_PER_M_SQ_PER_SEC	4::7424
	«magnitude» mole(s) per square meter per minute	mol m^{-2} min^{-1}	MDC_DIM_X_MOLE_PER_M_SQ_PER_MIN	4::7456
	«magnitude» mole(s) per square meter per hour	mol m^{-2} h^{-1}	MDC_DIM_X_MOLE_PER_M_SQ_PER_HR	4::7488
	«magnitude» mole(s) per square meter per day	mol m^{-2} d^{-1}	MDC_DIM_X_MOLE_PER_M_SQ_PER_DAY	4::7520
eq dose rate per body weight	«magnitude» equivalents per pound per minute	eq lb^{-1} min^{-1}	MDC_DIM_X_EQUIV_PER_LB_PER_MIN	4::7040
	«magnitude» equivalents per pound per hour	eq lb^{-1} h^{-1}	MDC_DIM_X_EQUIV_PER_LB_PER_HR	4::7008
eq dose rate per body surface area	«magnitude» equivalents per square meter per minute	eq m^{-2} min^{-1}	MDC_DIM_X_EQUIV_PER_M_SQ_PER_MIN	4::7104
	«magnitude» equivalents per square meter per hour	eq m^{-2} h^{-1}	MDC_DIM_X_EQUIV_PER_M_SQ_PER_HR	4::7072
	«magnitude» equivalents per square meter per day	eq m^{-2} d^{-1}	MDC_DIM_X_EQUIV_PER_M_SQ_PER_DAY	4::7136
IU dose quantity per body weight	«magnitude» int. units per kilogram	i.u. kg^{-1}	MDC_DIM_X_INTL_UNIT_PER_KG	4::7680
IU dose quantity per body surface area	«magnitude» int. units per square meter	i.u. m^{-2}	MDC_DIM_X_INTL_UNIT_PER_M_SQ	4::7712
IU dose rate per body weight	«magnitude» international units per pound per minute	i.u. lb^{-1} min^{-1}	MDC_DIM_X_INTL_UNIT_PER_LB_PER_MIN	4::6912
	«magnitude» international units per pound per hour	i.u. lb^{-1} h^{-1}	MDC_DIM_X_INTL_UNIT_PER_LB_PER_HR	4::10400
	«magnitude» international units per pound per day	i.u. lb^{-1} d^{-1}	MDC_DIM_X_INTL_UNIT_PER_LB_PER_DAY	4::6880
IU dose rate per body surface area	«magnitude» int. units per square meter per sec	i.u. m^{-2} sec^{-1}	MDC_DIM_X_INTL_UNIT_PER_M_SQ_PER_SEC	4::7648
	«magnitude» international units per square meter per min	i.u. m^{-2} min^{-1}	MDC_DIM_X_INTL_UNIT_PER_M_SQ_PER_MIN	4::6976
	«magnitude» international units per square meter per hour	i.u. m^{-2} h^{-1}	MDC_DIM_X_INTL_UNIT_PER_M_SQ_PER_HR	4::6944
	«magnitude» international units per square meter per day	i.u. m^{-2} d^{-1}	MDC_DIM_X_INTL_UNIT_PER_M_SQ_PER_DAY	4::7200
Pulmonary/ Systemic Vascular Resistance Index	dyne seconds square meter per centimeter to the power of 5	dyne s m^2 cm^{-5}	MDC_DIM_DYNE_SEC_M_SQ_PER_CM_5	4::8320
thermal calories	«magnitude» calories (thermal)	cal	MDC_DIM_X_CAL	4::8352
nutrition label calories	«magnitude» nutritional calories (= 1000 thermal cal)	nutr cal	MDC_DIM_X_NUTR_CAL	4::8384
thermal caloric rate	«magnitude» calories (thermal) per day	cal per day	MDC_DIM_X_CAL_PER_DAY	4::8416
Flow rate per body weight	«magnitude» liters per kg per minute	L per kg per min	MDC_DIM_X_L_PER_KG_PER_MIN	4::7264
	«magnitude» liters per kg per hour	L per kg per hour	MDC_DIM_X_L_PER_KG_PER_HR	4::7232
	«magnitude» liters per kg per day	L per kg per day	MDC_DIM_X_L_PER_KG_PER_DAY	4::7296

Copyright © 2015 IEEE. All rights reserved.

Authorized licensed use limited to: Tsinghua University. Downloaded on February 24,2026 at 08:08:34 UTC from IEEE Xplore. Restrictions apply.

Full document details: IEEE 11073-10101-2004/Amd 1-2017

Table A.6.3—Vital signs units of measurement *(continued)*

Dimension	Unit of measurement	Symbol (not normative)	Reference ID	Part::Code
Flow rate per body surface area	«magnitude» liters per meter squared per minute	L per m^2 per min	MDC_DIM_X_L_PER_M_SQ_PER_MIN	4::7328
	«magnitude» liters per meter squared per hour	L per m^2 per hour	MDC_DIM_X_L_PER_M_SQ_PER_HR	4::7360
	«magnitude» liters per meter squared per day	L per m^2 per day	MDC_DIM_X_L_PER_M_SQ_PER_DAY	4::7392
Work of breathing (per breath)	«magnitude» joule(s) per breath	J/breath	MDC_DIM_X_JOULES_PER_BREATH	4::8448
Work of breathing (per unit volume)	«magnitude» joule(s) per liter	J/L	MDC_DIM_X_JOULES_PER_L	4::8480
	«magnitude» joule(s) per milliliter	J/mL	MDC_DIM_X_JOULES_PER_ML	4::10528
Work of breathing (per unit time)	«magnitude» joule(s) per day	J/day	MDC_DIM_X_JOULES_PER_DAY	4::10496
Vascular Resistance	dyne seconds per centimeter to the power of 5	dyne s cm^{-5}	MDC_DIM_DYNE_SEC_PER_CM_5	4::8512
Vascular Resistance (Peripheral Reistance Unit)	mm[Hg] per (mL per sec)	PRU	MDC_DIM_MMHG_SEC_PER_ML	4::8544
Vascular Resistance (Wood's unit, pediatric)	mm[Hg] per (liter per minute)	Woods Unit, WU, HRU	MDC_DIM_MMHG_MIN_PER_L	4::8576
Amount of information	Bit	bit, b	MDC_DIM_BIT	4::8608
	Byte (8 bits)	byte, B	MDC_DIM_BYTE	4::8640
Volume concentration	drops per L	drops/L	MDC_DIM_DROPS_PER_X_L	4::8672
Shallow Breathing Index (breath)	breaths per minute per L	breaths/min/L	MDC_DIM_BREATHS_PER_MIN_PER_L	4::8704
Shallow Breathing Index (breaths squared)	number of breaths squared per minute per L	$breaths^2$/min/L	MDC_DIM_SQUARE_BREATHS_PER_MIN_PER_L	4::8736
Volume per minute per body weight	«magnitude» volume per minute per body weight	L/min/kg	MDC_DIM_X_L_PER_MIN_PER_KG	4::8768
Oxygen saturation-seconds	sat % seconds	sat-sec	MDC_DIM_O2_SAT_PERCENT_SEC	4::8800
millimeters per millivolt (display gain)	«magnitude» meters per volt	mm/mV	MDC_DIM_X_M_PER_VOLT	4::8832
Cardiac stroke work	«magnitude» gram-force meters	gf.m [trad g.m]	MDC_DIM_X_G_FORCE_M	4::8864
Cardiac stroke work per liter of fluid	«magnitude» gram-force meters per liter	gf.m/L [trad g.m/L]	MDC_DIM_X_G_FORCE_M_PER_L	4::8896
Cardiac Stroke Work per Body Surface Area	«magnitude» gram-force meters per square meter	gf.m/m^2 [trad g.m/m^2]	MDC_DIM_X_G_FORCE_M_PER_M_SQ	4::8928
Thermal caloric dose quantity per body weight	«magnitude» calories (thermal) per kg	cal per kg	MDC_DIM_X_CAL_PER_KG	4::8960
Thermal caloric dose rate per body weight	«magnitude» calories (thermal) per kg per day	cal per kg per day	MDC_DIM_X_CAL_PER_KG_PER_DAY	4::8992

Copyright © 2015 IEEE. All rights reserved.

Authorized licensed use limited to: Tsinghua University. Downloaded on February 24,2026 at 08:08:34 UTC from IEEE Xplore. Restrictions apply.

Full document details: IEEE 11073-10101-2004/Amd 1-2017

Table A.6.3—Vital signs units of measurement *(continued)*

Dimension	Unit of measurement	Symbol (not normative)	Reference ID	Part::Code
Thermal caloric dose "concentration"	«magnitude» calories (thermal) per mL	cal per mL	MDC_DIM_X_CAL_PER_ML	4::9024
Arbitrary Unit (arb'U) [1]	«magnitude» arbitrary unit	arb.u	MDC_DIM_X_ARB_UNIT	4::9056
arb'U concentration	«magnitude» arbitrary units per cubic centimeter	arb.u cm^{-3}	MDC_DIM_X_ARB_UNIT_PER_CM_CUBE	4::9088
	«magnitude» arbitrary units per cubic meter	arb.u m^{-3}	MDC_DIM_X_ARB_UNIT_PER_M_CUBE	4::9120
	«magnitude» arbitrary units per liter	arb.u l^{-1}	MDC_DIM_X_ARB_UNIT_PER_L	4::9152
	«magnitude» arbitrary units per milliliter	arb.u ml^{-1}	MDC_DIM_X_ARB_UNIT_PER_ML	4::9184
arb'U mass flow rate	«magnitude» arbitrary units per second	arb.u s^{-1}	MDC_DIM_X_ARB_UNIT_PER_SEC	4::9216
	«magnitude» arbitrary units per minute	arb.u min^{-1}	MDC_DIM_X_ARB_UNIT_PER_MIN	4::9248
	«magnitude» arbitrary units per hour	arb.u h^{-1}	MDC_DIM_X_ARB_UNIT_PER_HR	4::9280
	«magnitude» arbitrary units per day	arb.u d^{-1}	MDC_DIM_X_ARB_UNIT_PER_DAY	4::9312
arb'U dose quantity per body weight	«magnitude» arbitrary units per kilogram	arb.u kg^{-1}	MDC_DIM_X_ARB_UNIT_PER_KG	4::9344
arb'U dose quantity per body surface area	«magnitude» arbitrary units per square meter	arb.u m^{-2}	MDC_DIM_X_ARB_UNIT_PER_M_SQ	4::9376
arb'U dose rate per body weight	«magnitude» arbitrary units per kilogram per second	arb.u kg^{-1} s^{-1}	MDC_DIM_X_ARB_UNIT_PER_KG_PER_SEC	4::9408
	«magnitude» arbitrary units per kilogram per minute	arb.u kg^{-1} min^{-1}	MDC_DIM_X_ARB_UNIT_PER_KG_PER_MIN	4::9440
	«magnitude» arbitrary units per kilogram per hour	arb.u kg^{-1} h^{-1}	MDC_DIM_X_ARB_UNIT_PER_KG_PER_HR	4::9472
	«magnitude» arbitrary units per kilogram per day	arb.u kg^{-1} d^{-1}	MDC_DIM_X_ARB_UNIT_PER_KG_PER_DAY	4::9504
	«magnitude» arbitrary units per pound per minute	arb.u lb^{-1} min^{-1}	MDC_DIM_X_ARB_UNIT_PER_LB_PER_MIN	4::9536
	«magnitude» arbitrary units per pound per hour	arb.u lb^{-1} h^{-1}	MDC_DIM_X_ARB_UNIT_PER_LB_PER_HR	4::10432
	«magnitude» arbitrary units per pound per day	arb.u lb^{-1} d^{-1}	MDC_DIM_X_ARB_UNIT_PER_LB_PER_DAY	4::9568
arb'U dose rate per body surface area	«magnitude» arbitrary units per square meter per sec	arb.u m^{-2} sec^{-1}	MDC_DIM_X_ARB_UNIT_PER_M_SQ_PER_SEC	4::9600
	«magnitude» arbitrary units per square meter per min	arb.u m^{-2} min^{-1}	MDC_DIM_X_ARB_UNIT_PER_M_SQ_PER_MIN	4::9632
	«magnitude» arbitrary units per square meter per hour	arb.u m^{-2} h^{-1}	MDC_DIM_X_ARB_UNIT_PER_M_SQ_PER_HR	4::9664
	«magnitude» arbitrary units per square meter per day	arb.u m^{-2} d^{-1}	MDC_DIM_X_ARB_UNIT_PER_M_SQ_PER_DAY	4::9696

[1] International (IU) and United States Pharmacopeia (USP) units are defined in terms of comparison to a physical reference preparation; the mass or volume that constitutes one 'unit' varies based on which substance is being measured and the variance is based on the biological activity or effect. IU and USP units are used to quantify vitamins, hormones, some medications, vaccines, blood products, and other biologically active substances. Although the meaning of IU and USP units differs from substance to substance, comparisons to the underlying WHO or USP reference preparation can be made, facilitating interoperability across multiple institutions. In contrast, arbitrary units [arb'U] contain an arbitrary scale factor and preclude any meaningful comparison across multiple institutions (although comparability within a given institution may be possible).

Copyright © 2015 IEEE. All rights reserved.

Documents
Document Sharing Hub

Authorized licensed use limited to: Tsinghua University. Downloaded on February 24,2026 at 08:08:34 UTC from IEEE Xplore. Restrictions apply.

Full document details: IEEE 11073-10101-2004/Amd 1-2017

Table A.6.3—Vital signs units of measurement *(continued)*

Dimension	Unit of measurement	Symbol (not normative)	Reference ID	Part::Code
USP unit	«magnitude» USP unit	USP.u	MDC_DIM_X_USP_UNIT	4::9728
USP concentration	«magnitude» USP units per cubic centimeter	USP.u cm^{-3}	MDC_DIM_X_USP_UNIT_PER_CM_CUBE	4::9760
	«magnitude» USP units per cubic meter	USP.u m^{-3}	MDC_DIM_X_USP_UNIT_PER_M_CUBE	4::9792
	«magnitude» USP units per liter	USP.u l^{-1}	MDC_DIM_X_USP_UNIT_PER_L	4::9824
	«magnitude» USP units per milliliter	USP.u ml^{-1}	MDC_DIM_X_USP_UNIT_PER_ML	4::9856
USP mass flow rate	«magnitude» USP units per second	USP.u s^{-1}	MDC_DIM_X_USP_UNIT_PER_SEC	4::9888
	«magnitude» USP units per minute	USP.u min^{-1}	MDC_DIM_X_USP_UNIT_PER_MIN	4::9920
	«magnitude» USP units per hour	USP.u h^{-1}	MDC_DIM_X_USP_UNIT_PER_HR	4::9952
	«magnitude» USP units per day	USP.u d^{-1}	MDC_DIM_X_USP_UNIT_PER_DAY	4::9984
USP dose quantity per body weight	«magnitude» USP units per kilogram	USP.u kg^{-1}	MDC_DIM_X_USP_UNIT_PER_KG	4::10016
USP dose quantity per body surface area	«magnitude» USP units per square meter	USP.u m^{-2}	MDC_DIM_X_USP_UNIT_PER_M_SQ	4::10048
USP dose rate per body weight	«magnitude» USP units per kilogram per second	USP.u kg^{-1} s^{-1}	MDC_DIM_X_USP_UNIT_PER_KG_PER_SEC	4::10080
	«magnitude» USP units per kilogram per minute	USP.u kg^{-1} min^{-1}	MDC_DIM_X_USP_UNIT_PER_KG_PER_MIN	4::10112
	«magnitude» USP units per kilogram per hour	USP.u kg^{-1} h^{-1}	MDC_DIM_X_USP_UNIT_PER_KG_PER_HR	4::10144
	«magnitude» USP units per kilogram per day	USP.u kg^{-1} d^{-1}	MDC_DIM_X_USP_UNIT_PER_KG_PER_DAY	4::10176
	«magnitude» USP units per pound per minute	USP.u lb^{-1} min^{-1}	MDC_DIM_X_USP_UNIT_PER_LB_PER_MIN	4::10208
	«magnitude» USP units per pound per hour	USP.u lb^{-1} h^{-1}	MDC_DIM_X_USP_UNIT_PER_LB_PER_HR	4::10464
	«magnitude» USP units per pound per day	USP.u lb^{-1} d^{-1}	MDC_DIM_X_USP_UNIT_PER_LB_PER_DAY	4::10240
USP dose rate per body surface area	«magnitude» USP units per square meter per sec	USP.u m^{-2} sec^{-1}	MDC_DIM_X_USP_UNIT_PER_M_SQ_PER_SEC	4::10272
	«magnitude» USP units per square meter per min	USP.u m^{-2} min^{-1}	MDC_DIM_X_USP_UNIT_PER_M_SQ_PER_MIN	4::10304
	«magnitude» USP units per square meter per hour	USP.u m^{-2} h^{-1}	MDC_DIM_X_USP_UNIT_PER_M_SQ_PER_HR	4::10336
	«magnitude» USP units per square meter per day	USP.u m^{-2} d^{-1}	MDC_DIM_X_USP_UNIT_PER_M_SQ_PER_DAY	4::10368

Copyright © 2015 IEEE. All rights reserved.

Authorized licensed use limited to: Tsinghua University. Downloaded on February 24,2026 at 08:08:34 UTC from IEEE Xplore. Restrictions apply.

Full document details: IEEE 11073-10101-2004/Amd 1-2017

Table A.6.3—Vital signs units of measurement *(continued)*

Dimension	Unit of measurement	Symbol (not normative)	Reference ID	Part::Code
Slope of component gas concentration per expired total gas volume	volume percent gas concentration per liter	vol % per liter	MDC_DIM_VOL_PERCENT_PER_L	4::10560
elastance	«magnitude» pascal per liter	Pa l^{-1}	MDC_DIM_X_PASCAL_PER_L	4::10592
	«magnitude» pascal per milliliter	Pa ml^{-1}	MDC_DIM_X_PASCAL_PER_ML	4::10624
	«magnitude» bar per liter	bar l^{-1}	MDC_DIM_X_BAR_PER_L	4::10656
	(«magnitude» bar per liter) /10	bar l^{-1} 10^{-1}	MDC_DIM_X_BAR_PER_L_PER_10	4::10688
	«magnitude» bar per milliliter	bar ml^{-1}	MDC_DIM_X_BAR_PER_ML	4::10720
resistance (hydraulic)	«magnitude» bar second per liter	bar s l^{-1}	MDC_DIM_X_BAR_SEC_PER_L	4::10752
	(«magnitude» bar second per liter) /10	bar s l^{-1} 10^{-1}	MDC_DIM_X_BAR_SEC_PER_L_PER_10	4::10784
compliance	«magnitude» liter per hectoPascal	L hPa^{-1}	MDC_DIM_X_L_PER_HPA	4::10816
	«magnitude» liter per bar	L bar^{-1}	MDC_DIM_X_L_PER_BAR	4::10848
	«magnitude» liter per millibar	L $mbar^{-1}$	MDC_DIM_X_L_PER_MBAR	4::10880
work (of breathing) per liter per unit time	«magnitude» joules per liter per second	J/L/s	MDC_DIM_X_JOULES_PER_L_PER_SEC	4::10912
rate of pressure change	millimeter mercury per minute	mmHg min^{-1}	MDC_DIM_MM_HG_PER_MIN	4::10944
	millimeters mercury per second	mmHg s^{-1}	MDC_DIM_MM_HG_PER_SEC	4::10976
	«magnitude» bars per second	bar s^{-1}	MDC_DIM_X_BAR_PER_SEC	4::11008
	centimeter of water per second	cmH_2O s^{-1}	MDC_DIM_CM_H2O_PER_SEC	4::11040
relative rate of change	percent per half-hour	% per 1/2 hr	MDC_DIM_PERCENT_PER_HALF_HOUR	4::11072
cardiac stroke volume per body surface area	«magnitude» liters per beat per square meter	L/beat/m^2	MDC_DIM_X_L_PER_BEAT_PER_M2	4::11104
electric field strength	«magnitude» volt per centimeter	V cm^{-1}	MDC_DIM_X_VOLT_PER_CM	4::11136
irradiance (flux density per wavelength)	«magnitude» watts per square centimeter per nm	W cm^{-2} nm^{-1}	MDC_DIM_X_WATT_PER_CM2_PER_NM	4::11168
pressure to voltage calibration	centimeter of water pressure per microvolt	cmH_2O μV^{-1}	MDC_DIM_CM_H2O_PER_UV	4::11200

Copyright © 2015 IEEE. All rights reserved.

Authorized licensed use limited to: Tsinghua University. Downloaded on February 24,2026 at 08:08:34 UTC from IEEE Xplore. Restrictions apply.

Full document details: IEEE 11073-10101-2004/Amd 1-2017

A.7 Nomenclature, data dictionary, and codes for metrics (measurements and enumerations) (Block C)

A.7.3 Nomenclature and codes for hemodynamic monitoring measurements

A.7.3.6 Code table

NOTE—This table includes additional hemodynamic measurements and calculations based on non-invasive impedance cardiography (ICG) and an additional invasive blood pressure measurement obtained at the femoral artery.

Insert the following rows at the end of Table A.7.3.1 as shown:

Table A.7.3.1—Nomenclature and codes for haemodynamic monitoring measurements *(continued)*

Systematic name	Reference ID	Common term	Acronym	Description/Definition	Part::Code
Acceleration, initial | BloodFlow | Flow | Aorta, CVS	MDC_ACCELERATION_INDEX	Acceleration Index	ACI	Initial acceleration of blood flow in the aorta, which occurs within the first 10 to 20 milliseconds	2::19540
Ratio, Duration | electrical pre-ejection, mechanical systole | Flow | Aorta, CVS	MDC_SYSTOLIC_TIME_RATIO	Systolic Time Ratio	STR	The ratio of the electrical and mechanical systole duration (PEP/LVET).	2::19544
Fluid Content, Thoracic | | Conductivity | ChestCavity, CVS	MDC_THORACIC_FLUID_CONTENT	Thoracic Fluid Content	TFC	The electrical conductivity of the chest cavity, which is primarily determined by the intravascular, intraalveolar and the interstitial fluids in the thorax.	2::19548
Duration | AorticValve, Opening to Closing | Flow | Aorta, CVS	MDC_TIME_PD_VENT_L_AORT_EJCT	Left Ventricular Ejection Time	LVET	The time interval from opening to the closing of the aortic valve (mechanical systole).	2::19552
Duration | Pre-Ejection | Flow | Aorta, CVS	MDC_TIME_PD_VENT_L_AORT_PRE_EJCT	Pre-Ejection Period	PEP	The time interval from the beginning of electrical stimulation of the ventricles to the opening of the aortic valve (electrical systole).	2::19556
Index, Velocity | BloodFlow, Peak | Flow | Aorta, CVS	MDC_VELOCITY_INDEX	Velocity Index	VI	Peak velocity of blood flow in the aorta.	2::19560
Index | PerSurfaceArea | StrokeVolume | LeftVentricle, CVS	MDC_VOL_BLD_STROKE_INDEX	Stroke Volume Index	p-SVI	Left-ventricular stroke volume per heart beat, normalized for body surface area.	2::19564
Index | | Work, PerMinute, PerSurfaceArea | LeftVentricle, CVS	MDC_WK_LV_WORK_INDEX	Left Ventricular Work Index (per minute)	LVWI	Work performed by the left ventricle of the heart to eject the stroke volume over one minute's time, normalized for body surface area.	2::19568

Copyright © 2015 IEEE. All rights reserved.

Documents
Document Sharing Hub

Authorized licensed use limited to: Tsinghua University. Downloaded on February 24,2026 at 08:08:34 UTC from IEEE Xplore. Restrictions apply.

Full document details: IEEE 11073-10101-2004/Amd 1-2017

Table A.7.3.1—Nomenclature and codes for haemodynamic monitoring measurements *(continued)*

Systematic name	Reference ID	Common term	Acronym	Description/Definition	Part::Code
Index | | Work, PerStroke, PerSurfaceArea | LeftVentricle, CVS	MDC_WK_LV_STROKE_INDEX	Left Ventricular Stroke Work Index	LVSWI	Work of left ventricle of the heart in one cardiac cycle and related to body surface area (LVSW/BSA)	[2::18692]
Index | | Work, PerStroke, PerSurfaceArea | RightVentricle, CVS	MDC_WK_RV_STROKE_INDEX	Right Ventricular Stroke Work Index	RVSWI	Work of right ventricle of the heart in one cardiac cycle and related to body surface area (RVSW/BSA)	2::19572
Pressure | | Blood | FemoralArtery, CVS	MDC_PRESS_BLD_ART_FEMORAL	Femoral Artery Pressure	.	Pressure of the blood in the femoral artery.	2::19576
Pressure | Systolic | Blood | FemoralArtery, CVS	MDC_PRESS_BLD_ART_FEMORAL_SYS	Systolic Femoral Arterial Catheter Pressure	.	Systolic pressure of the blood in the femoral artery.	2::19577
Pressure | Diastolic | Blood | FemoralArtery, CVS	MDC_PRESS_BLD_ART_FEMORAL_DIA	Diastolic Femoral Arterial Catheter Pressure	.	Mean pressure of the blood in the femoral artery.	2::19578
Pressure | Mean | Blood | FemoralArtery, CVS	MDC_PRESS_BLD_ART_FEMORAL_MEAN	Mean Femoral Arterial Catheter Pressure	.	Diastolic pressure of the blood in the femoral artery.	2::19579
Flow | | Blood, PulmonaryCapillary | CVS	MDC_FLOW_BLD_PULM_CAP	Pulmonary Capillary Blood Flow	.	Flow of the blood in the pulmonary capillaries.	2::19580
Ratio, Concentration | arterial oxygen, inspired oxygen (PaO2/FiO2) | ArterialOxygen | Blood, CVS	MDC_O2_OXYGENATION_RATIO	Oxygenation Ratio	PaO_2/FiO_2, PFr	Oxygenation Ratio, calculated as the ratio of PaO2 (partial pressure of arterial oxygen) divided by FiO2 (the fractional of inspired oxygen, e.g. FiO2 in air = 0.21).	2::19584
Ratio, Concentration | arterial oxygen, inspired oxygen (PaO2/FiO2) | ArterialOxygen | Blood, CVS	MDC_SPO2_OXYGENATION_RATIO	SPO2 Oxygenation Ratio	SpO_2/FiO_2, SFr	Peripheral oxygen saturation level (of hemoglobin) to fraction of inspired oxygen ratio. Equation: 100*SpO2(%)/FiO2(%). Note: this calculated value may be considered invalid under certain conditions, e.g. SpO2 is not sufficiently correlated with PaO2.	2::19600
Volume | PerMinute | Blood | Left Ventricle, CVS, by Fick method	MDC_OUTPUT_CARDIAC_FICK	Cardiac Output	CO	Quantity of blood pumped by the left ventricle into the aorta per minute, specifically by using the Fick method	2::19588
Volume | Per Minute Per Body Surface Area | ConsumedOxygen | Blood, CVS	MDC_SAT_O2_CONSUMP_INDEX	(Estimated) O2 Consumption Index	.	Estimated O2 Consumption, normalized by body surface area	2::19592

Copyright © 2015 IEEE. All rights reserved.

Authorized licensed use limited to: Tsinghua University. Downloaded on February 24,2026 at 08:08:34 UTC from IEEE Xplore. Restrictions apply.

Full document details: IEEE 11073-10101-2004/Amd 1-2017

Table A.7.3.1—Nomenclature and codes for haemodynamic monitoring measurements *(continued)*

Systematic name	Reference ID	Common term	Acronym	Description/Definition	Part::Code
Volume | Per Minute Per Body Surface Area | DeliveredOxygen | Blood, CVS	MDC_SAT_O2_DELIV_INDEX	(Estimated) O2 Delivery Index	.	Estimated O2 Delivery, normalized by body surface area	2::19596
Pressure | | Blood | FemoralVein, CVS	MDC_PRESS_BLD_VEN_FEMORAL	Femoral Venous Pressure	.	Pressure of the blood in the femoral vein.	2::19604
Pressure | | Blood | BrachialArtery, CVS	MDC_PRESS_BLD_ART_BRACHIAL	Brachial Arterial Pressure	.	Pressure of the blood in the brachial artery.	2::19608
Rate | Beats | Heart | CVS, transthoracic impedance	MDC_TTHOR_HEART_RATE	Heart rate by transthoracic impedance	HR	Heart rate obtained from the variation of transthoracic impedance.	2::18482
Rate | Beats | Heart | CVS, manual palpation	MDC_PALPATION_HEART_RATE	Heart rate by palpation	HR	Heart rate obtained from an artery that is close to the surface and a pulse can be felt. [The most common places to measure heart rate using palpation are at the wrist (radial artery) and the neck (carotid artery).]	2::18490

Copyright © 2015 IEEE. All rights reserved.

Authorized licensed use limited to: Tsinghua University. Downloaded on February 24,2026 at 08:08:34 UTC from IEEE Xplore. Restrictions apply.

Full document details: IEEE 11073-10101-2004/Amd 1-2017

A.7.4 Nomenclature and codes for respiratory, ventilator and anesthesia measurements

Delete subclause A.7.4.6 and Table A.7.4.1 and renumber the subclauses and tables accordingly. Insert new subclauses at the end of subclause A.7.4 as shown. Include new figures and footnotes and renumber accordingly.

A.7.4.18 Gas concentration and partial pressure measurements

Two top-level vocabulary branches for gas concentration and partial pressure measurements are defined: MDC_CONC_AWAY for measurements typically obtained at the patient connector port and MDC_CONC_GASDLV for measurements obtained in the system supplying the gas to the patient, with or without a mechanical ventilator.[1,2] The vocabulary branch Reference ID prefix is followed by the gas identifier and measurement phase on the waveform, similar to convention previously established in ISO/IEEE 11073-10101:2004. Additional Reference ID conventions are described in Annex E.

The gas measurement site may be conveyed by a separate attribute in cases where additional precision is required.[3] The gas measurement sites for gas flow, pressure, volume, concentration and partial pressure measurements are enumerated in Table A.7.4.4 and are keyed to Figure A.7.4.1.

Default measurement sites are defined for three subsets of Reference IDs listed in Table A.7.4.5. In all other cases, the allowed measurement sites and default site location (if any) are specified as co-constraints by other standards and profiles.

Additional gas measurement sites and breathing circuit components are described in Annex F. These may be used to describe alternative and more complex configurations, including:

— ***open systems*** that have no reservoir and no rebreathing;

— ***semiopen systems*** that have a reservoir but no rebreathing;

— ***semiclosed systems*** that have a reservoir and partial rebreathing; and

— ***closed systems*** that have a reservoir and complete rebreathing.

The topology of the breathing circuit can be described using a sequence of the site and component identifiers that closely follows the overall flow of gas, starting at the fresh gas port and ending at one or more exhaust or scavenger ports.

[1] The MDC_CONC_AWAY_ Reference ID prefix is already defined in ISO/IEEE 11073-10101-2004 and has been extended to support additional gases. The Part::Code identifiers are enclosed in square braces […] to indicate that existing MDC_CONC_AWAY_ numeric codes are used for this set of terms.

[2] The new MDC_CONC_GASDLV_ prefix has been defined as a 'synonym' to the existing MDC_VENT_CONC_ Reference ID prefix. The Part::Code identifiers are enclosed in wavy braces {…} to indicate that existing MDC_VENT_CONC_ numeric codes are used for this set of terms.

[3] For example, the gas measurement site is conveyed by OBX-20 in an HL7 V2.6 message,.

Copyright © 2015 IEEE. All rights reserved.

Documents
Document Sharing Hub

Authorized licensed use limited to: Tsinghua University. Downloaded on February 24,2026 at 08:08:34 UTC from IEEE Xplore. Restrictions apply.

Full document details: IEEE 11073-10101-2004/Amd 1-2017

Table A.7.4.4—Gas measurement sites

Reference ID	Key	Description	Part::Code
MDC_GAS_MSMT_SITE_NOS		not specified	7::2048
MDC_GAS_MSMT_SITE_AWAY	①	airway adaptor (patient connection port)	7::2049
MDC_GAS_MSMT_SITE_YPI	②	Y-piece patient interface (circle)	7::2050
MDC_GAS_MSMT_SITE_ETT	③	endotracheal tube	7::2051
MDC_GAS_MSMT_SITE_FGF	④	fresh gas flow	7::2052
MDC_GAS_MSMT_SITE_EXH	⑤	exhaust (or scavenger)	7::2053
MDC_GAS_MSMT_SITE_IL	⑥	inspiratory limb	7::2054
MDC_GAS_MSMT_SITE_EL	⑦	expiratory limb	7::2055
MDC_GAS_MSMT_SITE_RB	⑧	right bronchus	7::2058
MDC_GAS_MSMT_SITE_LB	⑨	left bronchus	7::2057
MDC_GAS_MSMT_SITE_PI		patient interface	7::2060
MDC_GAS_MSMT_SITE_ETTC		endotracheal tube, near the carina	7::2061

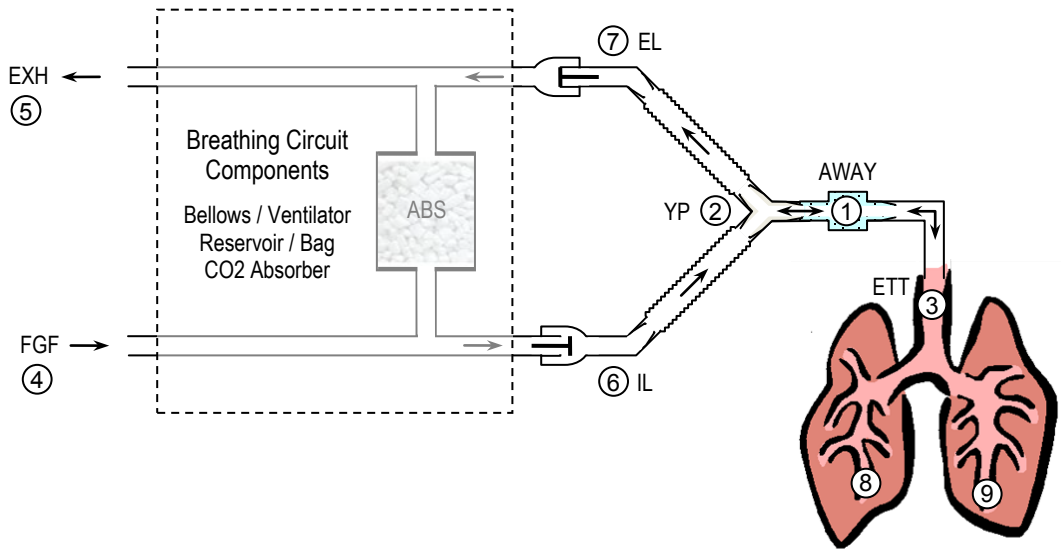

Figure A.7.4.1—Gas concentration and partial pressure measurement locations

Table A.7.4.5—Default gas measurement sites

Reference IDs that contain	Default gas measurement site	Description
_AWAY	MDC_GAS_MSMT_SITE_AWAY	patient connection port
MDC_CONC_GASDLV *and* _INSP	MDC_GAS_MSMT_SITE_IL	inspiratory limb during inspiratory phase
MDC_CONC_GASDLV *and* _EXP	MDC_GAS_MSMT_SITE_EL	expiratory limb during expiratory phase

A.7.4.19 Inspiratory breath type classification

In order to classify ventilator and patient interaction in response to a patient's breathing effort or an inflation delivered by the ventilator, the IEEE 11073 and ISO/TC121/SC4 Working Groups have defined a set of five observed breath-types: controlled, synchronized assisted, assisted, supported and unassisted. The five breath types and related precursor events are shown in Figure A.7.4.2.

Copyright © 2015 IEEE. All rights reserved.
Documents
Document Sharing Hub
Authorized licensed use limited to: Tsinghua University. Downloaded on February 24,2026 at 08:08:34 UTC from IEEE Xplore. Restrictions apply.
Full document details: IEEE 11073-10101-2004/Amd 1-2017

Numeric observations such as breath rate, minute volume, and tidal volume reported by ventilators may be based on these breath types. In present-day ventilators, breaths are often classified either as spontaneous or mandatory. In an effort to provide clinicians, researchers and others with more specific data, the IEEE 11073 and ISO/TC121/SC4 Working Groups have defined more specific rate and volume observations (in this Standard and in ISO/CD 19223 [B2], respectively). Measurements qualified in this manner may be used to characterize the breathing patterns of the ventilated patient and obtain an indication of the degree of patient dependence on the ventilator. This Standard provides terms for both current use and in ISO 19223.

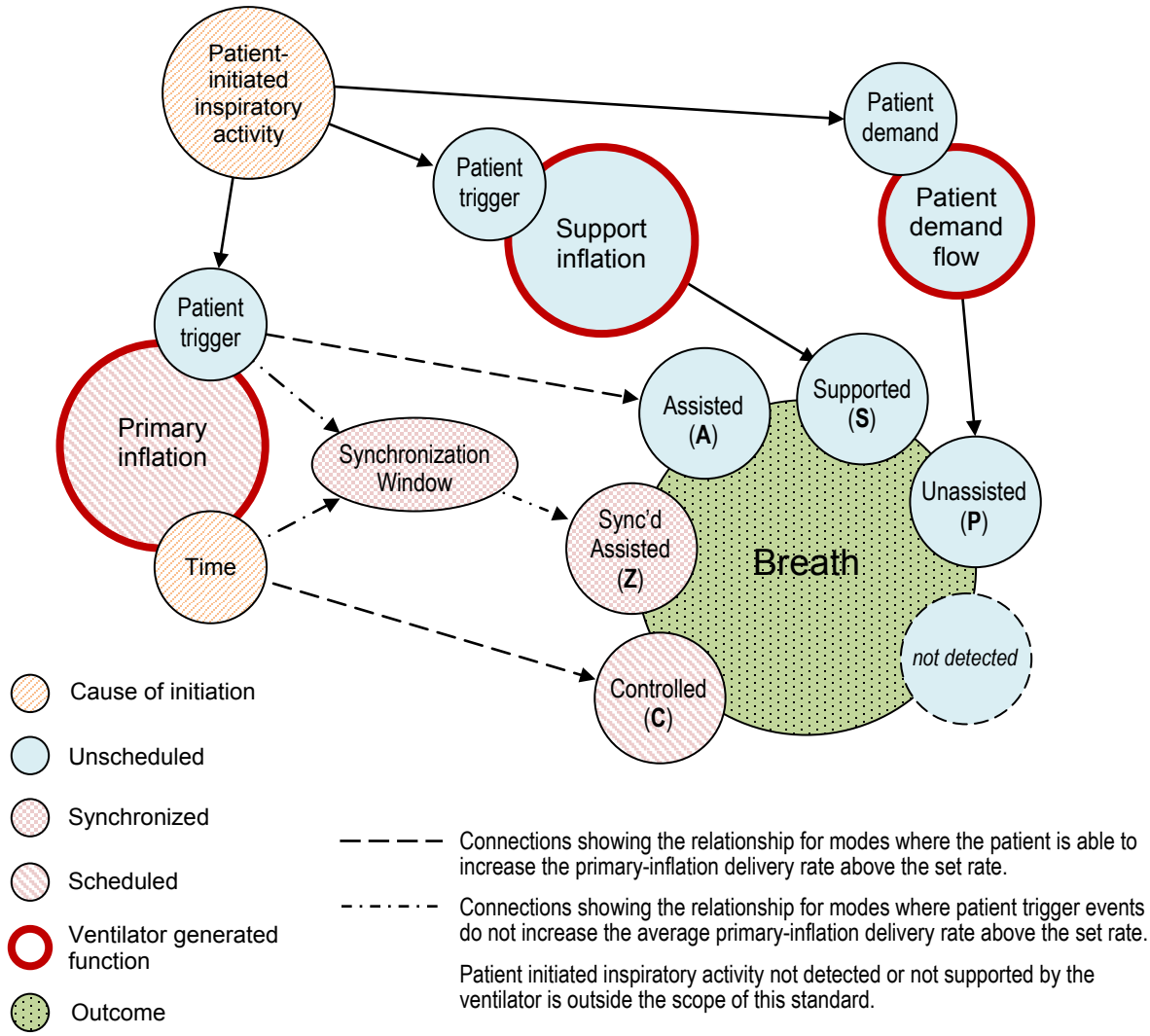

Figure A.7.4.2—Relationship between breaths and Inflations

The five breath type definitions are based the *initiation* of the breath (patient or ventilator) and its *intended delivery* – unassisted, *aka* **p**atient (P), **s**upport (S), **a**ssisted (A), synchron**i**zed assisted (Z) or **c**ontrolled (C). The five breath types are identified using the single-letter SD-codes { P, S, A, Z, C } that convey the start and intended delivery of the inspiratory phase of each breath or inflation. The SD-codes are defined in Table A.7.4.6.[4]

[4] SD-codes are *not* intended to provide a complete breath-by-breath description; instead, they focus primarily on the patient and ventilator synchronization implied by the words "spontaneous" and "mandatory" and concurrency of a patient (P) or support (S) breath with respect to an underlying assisted (A) or controlled (C) primary inflation.

Copyright © 2015 IEEE. All rights reserved.
Documents
Document Sharing Hub
Authorized licensed use limited to: Tsinghua University. Downloaded on February 24,2026 at 08:08:34 UTC from IEEE Xplore. Restrictions apply.
Full document details: IEEE 11073-10101-2004/Amd 1-2017

Table A.7.4.6—Inspiratory breath type classifications

SD	SD description and examples
P	The ventilator performs no action on behalf of the patient: breaths or inspiratory gas flow are initiated and terminated by the **patient** where pressure and flow/volume delivery are determined by the patient without support or assistance by the ventilator. Includes unassisted breaths that are superimposed on the intermittently elevated baseline pressure with APRV, bilevel or spontaneous-only modes (see Note 1).
S	Ventilator inflations or inspiratory gas flow that are initiated by the patient and that are intended to be terminated by the patient where the inspiratory pressure is raised above baseline to **support** some portion of the work of breathing (WOB). Includes proportional assist ventilation (PAV) where the ventilator provides a level of support proportional to patient effort. Includes supported breaths that are superimposed on the intermittently elevated baseline pressure with APRV, bilevel or spontaneous-only modes.
A	Primary inflations that are initiated by the patient at greater than the set rate (see Note 2). The associated breaths are classified as having been **assisted** by the inflation.
Z	Primary inflations that have been assured to be delivered at the average set rate but which are initiated by the patient within a timed synchronization window. The associated breaths are classified as having had **synchronized assistance** by the inflation.
C	Primary inflations that are initiated by the ventilator at the set rate. The resulting breaths are classified as being **controlled** by the inflation. This includes backup ventilation breaths, apnea ventilation breaths and APRV and bilevel baseline pressure changes.

NOTE 1—APRV (Airway Pressure Relief Ventilation) or bilevel refer to ventilation modes where the baseline pressure is changed from time to time while allowing the patient to initiate either unassisted or supported breaths superimposed above the current baseline pressure level.

NOTE 2—A *primary inflation* is a ventilator inflation type that has been selected for assured delivery at or greater than the set rate according to the selected mode. The selected inflation type will be one that is intended to be terminated by the ventilator if not initiated by the patient.

The SD-codes { P, S, A, Z, C } provide a concise notation that can describe a subset of one or more inspiratory breath or inflation types that are included in a breath rate or other calculation. In a real-time setting this information can be sent immediately after the beginning of the inspiratory phase since the start and intended delivery information are known at that time.

The "concurrency" of unassisted and support breaths that are superimposed above a baseline or mandatory inspiratory phase (and expiratory phase) can be determined if the end of the inspiratory phase is reported at a later time. Annex D (informative) provides examples of how the SD-codes can be used to calculate a variety of breath rates when this information is known.

The five breath types { P, S, A, Z, C } are encoded using two REFID 'atoms': the first is '_BTSD', denoting 'Breath Type Start Delivery', and the second specifies one to five single-letter SD-codes { P, S, A, Z, C }. If a concurrency relationship between a P (patient breath) or S (support inflation) and an underlying A (assisted) or Z (synchronized assisted) or C (controlled) inflation is expressed, the P or S shall be prefaced by a lower-case 'i' to indicate the concurrency with respect to the underlying inspiratory phase of the A, Z or C inflation.

For example, using the base term MDC_VENT_RESP_RATE, the REFID for traditional 'spontaneous' breath rate is identified as MDC_VENT_RESP_BTSD_PS_RATE. Although legacy 'spontaneous' terms may be used when detailed { P, S, A, Z, C } information is not available, the newer '_BTSD' breath and inflation types should be used whenever possible. Additional breath rate examples and { P, S, A, Z, C } encodings are provided in Annex D.

A.7.4.20 Nomenclature and code table

This subclause defines nomenclature and code extensions for respiratory, ventilator and anesthesia measurements. It includes respiratory, ventilator and anesthesia terms that were originally defined in Table A.7.4.1 of IEEE Std 11073-10101-2004 as well as new terms defined since its publication.

Copyright © 2015 IEEE. All rights reserved.

Documents
Document Sharing Hub

Authorized licensed use limited to: Tsinghua University. Downloaded on February 24,2026 at 08:08:34 UTC from IEEE Xplore. Restrictions apply.

Full document details: IEEE 11073-10101-2004/Amd 1-2017

This subclause also introduces several new conventions for REFID construction to support reporting of gas concentration and partial pressure and for supporting numeric observations such as breath rate, minute volume and tidal volume that are based on a subset of breath types. It also defines several new Reference ID 'synonyms' to support new conventions for their construction and to improve clarity.

This subclause also identifies terms from IEEE Std 11073-10101-2004 that are *not* recommended for new implementations, again with the goal of support a more systematic and contemporary treatment of ventilator terminology. For example, units-of-measure are assumed to be conveyed by a separate attribute, eliminating the need for separate observation identifiers for partial pressure (e.g., kPa or mm[Hg]) or concentration (% or {vol}%).

This subclause also introduces the _SETTING 'über-discriminator' convention. Gas setting identifiers are derived from the corresponding observation identifiers by appending '_SETTING' to the Reference ID and adding 0x01000000 to the Partition::Code. For example, the observed ventilator respiration rate is MDC_VENT_RESP_RATE [2::20514] and the corresponding setting is MDC_VENT_RESP_RATE_SETTING [258::20514], where the upper 16-bit partition value of 258 is 0x0100 + 2. This convention may be applied to any observation identifier in the SCADA partition.

The gas concentration and partial pressure measurement identifiers are summarized in Table A.7.4.7. Gases and volatile anesthetic agents are used to identify columns. The first seven rows indicate the physiologic and clinical role for each gas or agent. The lower group of 'MDC gas and phase' rows indicate the supported gas measurements that can be obtained at the patient airway (AWAY), the gas delivery system (GASDLV) and gas consumption over a single case or the total over multiple cases.

Table A.7.4.8 lists the nomenclature and codes for respiratory measurements, and includes all 'new' terms with a context free *Part::Code* (without braces) and 'existing' terms [*Part::Code*] and 'REFID-synonym' {*Part::Code*} terms, where braces indicate substantial equivalency to an existing *Part::Code* identifier.

NOTE—Per the editing instructions for subclause A.7.4, Table A.7.4.1 has been deleted and is replaced by Table A.7.4.8 that merges existing Table A.7.4.1 content with new content in a single comprehensive table. The following conventions were used to indicate the editing changes that were made to Table A.7.4.1 to create Table A.7.4.8:

— *Rows in Table A.7.4.8 that do not have a Part::Code that starts with '[' or '{' were* ***inserted*** *in the existing Table A.7.4.1.*

— *Rows in Table A.7.4.8 that have a Part::Code that starts with '[' **change** an existing Table A.7.4.1 row by using strikethrough (to remove old material) and underscore (to add new material).*

— *Rows in Table A.7.4.8 that have a Part::Code that starts with '{' were* ***inserted*** *in the existing Table A.7.4.1 as a Reference ID 'synonym' that may be used in lieu of an existing Reference ID having the same Part::Code. Although the existing Reference ID may be used, the newer Reference ID is preferred.*

— *Terms listed in Table A.7.4.10 are not recommended for future use; the mapping shown in Table A.7.4.9 should be used to convert an existing term to its equivalent term in Table A.7.4.8.*

Copyright © 2015 IEEE. All rights reserved.

Documents
Document Sharing Hub

Authorized licensed use limited to: Tsinghua University. Downloaded on February 24,2026 at 08:08:34 UTC from IEEE Xplore. Restrictions apply.

Full document details: IEEE 11073-10101-2004/Amd 1-2017

Table A.7.4.7—Deployment of gas partial pressure and concentration and consumption information (informative)

Agents/Gases	Agent	Desflurane	Enflurane	Halothane	Isoflurane	Sevoflurane	N_2O	Xe	O_2	CO_2	Air	N_2	Ar	He	NO	NO_2	CO	Ethanol	CH_4
Volatile Agents	●	●	●	●	●	●													
MAC Gas	●	●	●	●	●	●	●	●											
Balance Gas							●	●	●		●	●	●	●					
Metabolically Useful									●	●									
Metabolically Consumed									●										
Metabolically Produced										●									
Unwanted Gas													●			●	●	●	●
MDC gas and phase																			
MDC_CONC_AWAY_*gas*	✓	✓	✓	✓	✓	✓	✓	✓	✓	✓		✓	✓	✓	✓	✓			
MDC_CONC_AWAY_*gas*_ET	✓	✓	✓	✓	✓	✓	✓	✓	✓	✓		✓	✓	✓	✓	✓			
MDC_CONC_AWAY_*gas*_INSP	✓	✓	✓	✓	✓	✓	✓	✓	✓	✓		✓	✓	✓	✓	✓			
MDC_CONC_AWAY_*gas*_EXP		✓	✓	✓	✓	✓	✓	✓	✓	✓		✓	✓	✓	✓	✓			
MDC_CONC_GASDLV_*gas*		✓	✓	✓	✓	✓	✓	✓	✓	✓		✓	✓	✓	✓	✓			
MDC_CONC_GASDLV_*gas*_INSP		✓	✓	✓	✓	✓	✓	✓	✓	✓		✓	✓	✓	✓	✓			
MDC_CONC_GASDLV_*gas*_EXP		✓	✓	✓	✓	✓	✓	✓	✓	✓		✓	✓	✓	✓	✓			
MDC_FLOW_*gas*_FG							✓		✓		✓								
MDC_PRESS_*gas*_SUPPLY							✓		✓		✓								
MDC_PRESS_*gas*_CYL							✓		✓[12]		✓								
MDC_VOL_DELIV_*gas*_CASE		✓	✓	✓	✓	✓	✓	✓	✓	✓	✓								
MDC_VOL_DELIV_*gas*_TOTAL		✓	✓	✓	✓	✓	✓	✓	✓	✓	✓								
MDC_VOL_DELIV_*gas*_LIQUID_CASE		✓	✓	✓	✓	✓													
MDC_VOL_DELIV_*gas*_LIQUID_TOTAL		✓	✓	✓	✓	✓													

Copyright © 2015 IEEE. All rights reserved.

Documents
Document Sharing Hub

Authorized licensed use limited to: Tsinghua University. Downloaded on February 24,2026 at 08:08:34 UTC from IEEE Xplore. Restrictions apply.

Full document details: IEEE 11073-10101-2004/Amd 1-2017

Table A.7.4.8—Nomenclature and codes for respiratory measurements

Systematic name	Reference ID	Common term	Acronym	Description/Definition	Part::Code
Respiratory Rates – method specific					
Rate | NOS | Breath | Breathing	MDC_RESP_RATE	Respiration rate	RR	Rate of breathing; method not specified	[2::20490]
Rate | | Breath | Patient, Spontaneous	MDC_RESP_SPONT_RATE	Spontaneous respiration rate (legacy devices and systems)	RR	Spontaneous respiration rate, the rate of breaths initiated and terminated by the patient where pressure and flow/volume delivery are determined by the patient without support or assistance by a ventilator. [This term may be used with legacy devices and systems where the precise definition of 'spontaneous' is unknown; otherwise, the more precise term MDC_RESP_BTSD_PS_RATE should be used.]	2::20594
Rate | | Breath | Patient, Spontaneous	MDC_RESP_BTSD_PS_RATE	Spontaneous respiration rate (preferred)	RR	Spontaneous respiration rate, the rate of breaths or inspiratory gas flow initiated by the patient where flow and/or volume is determined by the patient and are delivered with the intention that the breath will be terminated by the patient.	2::20602
Rate | Airway | Breath | Breathing	MDC_AWAY_RESP_RATE	Respiration rate	RR	Rate of breathing; method: direct airway flow measurement.	[2::20498]
Rate | Pressure | Breath | Breathing	MDC_PRESS_RESP_RATE	Respiration rate	RR	Rate of breathing; method: non-airway pressure measurement, e.g. central venous blood pressure (CVP).	[2::20530]
Rate | CO2 | Breath | Breathing	MDC_CO2_RESP_RATE	Respiration rate	RR	Rate of breathing; method: carbon dioxide measurement	[2::20522]
Rate | CO2 | Breath | Ventilator	MDC_VENT_CO2_RESP_RATE	Ventilation rate	.	Rate of mechanical ventilation; method: carbon dioxide concentration measurement. [This refers to the CO2 respiration rate measured by the ventilator and is not the set ventilator rate nor the ventilator inflation rate; it can include unassisted spontaneous breaths as well.]	[2::20538]
Rate | Acoustic | Breath | Breathing	MDC_ACOUSTIC_RESP_RATE	Acoustic Respiration Rate	RR-a	Rate of breathing; method: acoustic.	2::20578
Rate | Plethysmographic | Breath | Breathing	MDC_PULS_OXIM_PLETH_RESP_RATE	Plethysmographic Respiration Rate	RR-p	Rate of breathing; method: SpO2 plethysmography	2::20586
Rate | Transthoracic | Breath | Breathing	MDC_TTHOR_RESP_RATE	Respiration rate	RR	Rate of breathing; method: transthoracic impedance variations	[2::20506]
ElectricalImpedance | Transthoracic | Respiration | Breathing	MDC_IMPED_TTHOR	Transthoracic Impedance	Z0	Transthoracic measurement of electrical impedance (influenced by respiration and other factors)	[2::20708]
Ventilator Respiratory and Inflation Rates					
Rate | NOS | Breath | Ventilator	MDC_VENT_RESP_RATE	Ventilation rate	RR	Rate of mechanical ventilation; method not specified	[2::20514]
Rate | Displayed or Actual | Breath | Ventilator, Setting	MDC_VENT_RESP_RATE_SETTING	Set inflation rate	set RR	Displayed minimum and/or actual ventilator rate setting, may be mode dependent.	[258::20514]

Copyright © 2015 IEEE. All rights reserved.

Documents
Document Sharing Hub

Authorized licensed use limited to: Tsinghua University. Downloaded on February 24,2026 at 08:08:34 UTC from IEEE Xplore. Restrictions apply.

Full document details: IEEE 11073-10101-2004/Amd 1-2017

Table A.7.4.8—Nomenclature and codes for respiratory measurements *(continued)*

Systematic name	Reference ID	Common term	Acronym	Description/Definition	Part::Code
Rate | Minimum assured | Breath | Ventilator, Setting	MDC_VENT_RESP_RATE_MIN_SETTING	Minimum assured ventilation inflation rate setting	.	Minimum assured ventilator-initiated inflation rate, e.g. in continuous mandatory ventilation or assist/mandatory ventilation mode.	[258::20516]
Rate | Average | Breath | Ventilator, Setting	MDC_VENT_RESP_RATE_MEAN_SETTING *MDC_VENT_RESP_RATE_AVG_SETTING*	Average ventilation rate setting	.	Average ventilator-initiated inflation rate, e.g. in Synchronized Intermittent Mandatory Ventilation (SIMV) ventilation mode.	[258::20517]
Rate | Target, Calculated | Breath | Ventilator, all breath and inflation types	MDC_VENT_RESP_TARGET_AUTO_RATE	Target respiratory rate	target RR	The ventilator calculated target respiratory rate, typically used to achieve a desired minute volume or other objective.	2::21490
Rate | Backup | Breath | Ventilator	MDC_VENT_RESP_BACKUP_RATE	Backup ventilation rate	.	Minimum assured ventilation rate in modes that support spontaneous breaths	2::21410
Rate | Backup | Breath | Ventilator, Setting	MDC_VENT_RESP_BACKUP_RATE_SETTING	Backup ventilation rate setting	.	Apnea (backup) rate, e.g. in CSV mode.	258::21410
Rate | NOS | Breath | Ventilator and Patient, total breath rate, all breath types	MDC_VENT_RESP_BTSD_PSAZC_RATE	Total respiratory rate; total breath rate	.	Total rate of breaths or inspiratory gas flow comprised of unassisted (P), supported (S), assisted (A), synchronized assisted (Z) and controlled (C) breath types.	2::21418
Rate | NOS | Breath | Ventilator and Patient, patient-initiated breaths, unassisted by ventilator	MDC_VENT_RESP_BTSD_P_RATE	Unassisted spontaneous breath rate; respiration rate	.	Rate of breaths or inspiratory gas flow initiated and terminated by the patient where pressure and flow/volume delivery are determined by the **patient** without support or assistance by the ventilator. Includes unassisted breaths that are superimposed on the intermittently elevated baseline pressure with APRV, bilevel or spontaneous-only modes.	2::21426
Rate | NOS | Breath | Ventilator and Patient, patient-initiated breaths, delivered as supported breaths	MDC_VENT_RESP_BTSD_S_RATE	Supported breath rate	.	Rate of inflations or inspiratory gas flow initiated by the patient and that are intended to be terminated by the patient where the inspiratory pressure is raised above baseline to **support** some portion of the work of breathing (WOB). Includes proportional assist ventilation (PAV) where the ventilator provides a level of support proportional to patient effort. Includes supported breaths that are superimposed on the intermittently elevated baseline pressure with APRV, bilevel or spontaneous-only modes.	2::21434
Rate | NOS | Breath | Ventilator and Patient, patient-initiated primary inflations at a rate greater than set rate, delivered as assisted breaths	MDC_VENT_RESP_BTSD_A_RATE	Assisted breath rate	.	Rate of primary inflations initiated by the patient at greater than the set rate. The associated breaths are classified as having been **assisted** by the inflation.	2::21442

Copyright © 2015 IEEE. All rights reserved.

Documents
Document Sharing Hub

Authorized licensed use limited to: Tsinghua University. Downloaded on February 24,2026 at 08:08:34 UTC from IEEE Xplore. Restrictions apply.

Full document details: IEEE 11073-10101-2004/Amd 1-2017