IEEE SA
STANDARDS
ASSOCIATION

STANDARDS

Health Informatics—Device Interoperability

Part 10421: Personal Health Device Communication—Device Specialization—Peak Expiratory Flow Monitor (Peak Flow)

IEEE Engineering in Medicine and Biology Society

Developed by the
IEEE 11073™ Standards Committee

IEEE Std 11073-10421™-2023
(Revision of IEEE Std 11073-10421-2010)

IEEE

Documents
Document Sharing Hub

Authorized licensed use limited to: Tsinghua University. Downloaded on February 24,2026 at 08:58:31 UTC from IEEE Xplore. Restrictions apply.

Full document details: IEEE 11073-10421-2023

IEEE Std 11073-10421™-2023
(Revision of IEEE Std 11073-10421-2010)

Health Informatics—Device Interoperability

Part 10421: Personal Health Device Communication—Device Specialization—Peak Expiratory Flow Monitor (Peak Flow)

Developed by the

IEEE 11073™ Standards Committee
of the
IEEE Engineering in Medicine and Biology Society

Approved 30 March 2023

IEEE SA Standards Board

Documents
Document Sharing Hub

Authorized licensed use limited to: Tsinghua University. Downloaded on February 24,2026 at 08:58:31 UTC from IEEE Xplore. Restrictions apply.

Full document details: IEEE 11073-10421-2023

Abstract: Within the context of the ISO/IEEE 11073 family of standards for device communication, a normative definition of communication is established in this standard between personal telehealth peak expiratory flow monitor devices and compute engines (e.g., cell phones, personal computers, personal health appliances, and set-top boxes) in a manner that enables plug-and-play interoperability. Appropriate portions of existing standards are leveraged, including ISO/IEEE 11073 terminology, information models, application profile standards, and transport standards. The use of specific term codes, formats, and behaviors is specified in telehealth environments restricting optionality in base frameworks in favor of interoperability. A common core of communication functionality is defined for personal telehealth peak expiratory flow monitor devices.

Keywords: forced expiratory volume, IEEE 11073-10421™, medical device communication, peak expiratory flow, peak expiratory flow monitor, peak flow, personal health devices

The Institute of Electrical and Electronics Engineers, Inc.
3 Park Avenue, New York, NY 10016-5997, USA

Copyright © 2023 by The Institute of Electrical and Electronics Engineers, Inc.
All rights reserved. Published 30 June 2023. Printed in the United States of America.

IEEE is a registered trademark in the U.S. Patent & Trademark Office, owned by The Institute of Electrical and Electronics Engineers, Incorporated.

PDF: ISBN 978-1-5044-9626-1 STD26098
Print: ISBN 978-1-5044-9627-8 STDPD26098

IEEE prohibits discrimination, harassment, and bullying.
For more information, visit https://www.ieee.org/about/corporate/governance/p9-26.html.
No part of this publication may be reproduced in any form, in an electronic retrieval system or otherwise, without the prior written permission of the publisher.

Documents
Document Sharing Hub

Authorized licensed use limited to: Tsinghua University. Downloaded on February 24,2026 at 08:58:31 UTC from IEEE Xplore. Restrictions apply.

Full document details: IEEE 11073-10421-2023

Important Notices and Disclaimers Concerning IEEE Standards Documents

IEEE Standards documents are made available for use subject to important notices and legal disclaimers. These notices and disclaimers, or a reference to this page (https://standards.ieee.org/ipr/disclaimers.html), appear in all standards and may be found under the heading "Important Notices and Disclaimers Concerning IEEE Standards Documents."

Notice and Disclaimer of Liability Concerning the Use of IEEE Standards Documents

IEEE Standards documents are developed within IEEE Societies and subcommittees of IEEE Standards Association (IEEE SA) Board of Governors. IEEE develops its standards through an accredited consensus development process, which brings together volunteers representing varied viewpoints and interests to achieve the final product. IEEE standards are documents developed by volunteers with scientific, academic, and industry-based expertise in technical working groups. Volunteers are not necessarily members of IEEE or IEEE SA and participate without compensation from IEEE. While IEEE administers the process and establishes rules to promote fairness in the consensus development process, IEEE does not independently evaluate, test, or verify the accuracy of any of the information or the soundness of any judgments contained in its standards.

IEEE makes no warranties or representations concerning its standards, and expressly disclaims all warranties, express or implied, concerning this standard, including but not limited to the warranties of merchantability, fitness for a particular purpose and non-infringement IEEE Standards documents do not guarantee safety, security, health, or environmental protection, or guarantee against interference with or from other devices or networks. In addition, IEEE does not warrant or represent that the use of the material contained in its standards is free from patent infringement. IEEE Standards documents are supplied "AS IS" and "WITH ALL FAULTS."

Use of an IEEE standard is wholly voluntary. The existence of an IEEE standard does not imply that there are no other ways to produce, test, measure, purchase, market, or provide other goods and services related to the scope of the IEEE standard. Furthermore, the viewpoint expressed at the time a standard is approved and issued is subject to change brought about through developments in the state of the art and comments received from users of the standard.

In publishing and making its standards available, IEEE is not suggesting or rendering professional or other services for, or on behalf of, any person or entity, nor is IEEE undertaking to perform any duty owed by any other person or entity to another. Any person utilizing any IEEE Standards document, should rely upon their own independent judgment in the exercise of reasonable care in any given circumstances or, as appropriate, seek the advice of a competent professional in determining the appropriateness of a given IEEE standard.

IN NO EVENT SHALL IEEE BE LIABLE FOR ANY DIRECT, INDIRECT, INCIDENTAL, SPECIAL, EXEMPLARY, OR CONSEQUENTIAL DAMAGES (INCLUDING, BUT NOT LIMITED TO: THE NEED TO PROCURE SUBSTITUTE GOODS OR SERVICES; LOSS OF USE, DATA, OR PROFITS; OR BUSINESS INTERRUPTION) HOWEVER CAUSED AND ON ANY THEORY OF LIABILITY, WHETHER IN CONTRACT, STRICT LIABILITY, OR TORT (INCLUDING NEGLIGENCE OR OTHERWISE) ARISING IN ANY WAY OUT OF THE PUBLICATION, USE OF, OR RELIANCE UPON ANY STANDARD, EVEN IF ADVISED OF THE POSSIBILITY OF SUCH DAMAGE AND REGARDLESS OF WHETHER SUCH DAMAGE WAS FORESEEABLE.

Documents
Document Sharing Hub

Authorized licensed use limited to: Tsinghua University. Downloaded on February 24,2026 at 08:58:31 UTC from IEEE Xplore. Restrictions apply.

Full document details: IEEE 11073-10421-2023

Translations

The IEEE consensus balloting process involves the review of documents in English only. In the event that an IEEE standard is translated, only the English version published by IEEE is the approved IEEE standard.

Official statements

A statement, written or oral, that is not processed in accordance with the IEEE SA Standards Board Operations Manual shall not be considered or inferred to be the official position of IEEE or any of its committees and shall not be considered to be, nor be relied upon as, a formal position of IEEE. At lectures, symposia, seminars, or educational courses, an individual presenting information on IEEE standards shall make it clear that the presenter's views should be considered the personal views of that individual rather than the formal position of IEEE, IEEE SA, the Standards Committee, or the Working Group. Statements made by volunteers may not represent the formal position of their employer(s) or affiliation(s).

Comments on standards

Comments for revision of IEEE Standards documents are welcome from any interested party, regardless of membership affiliation with IEEE or IEEE SA. However, **IEEE does not provide interpretations, consulting information, or advice pertaining to IEEE Standards documents**.

Suggestions for changes in documents should be in the form of a proposed change of text, together with appropriate supporting comments. Since IEEE standards represent a consensus of concerned interests, it is important that any responses to comments and questions also receive the concurrence of a balance of interests. For this reason, IEEE and the members of its Societies and subcommittees of the IEEE SA Board of Governors are not able to provide an instant response to comments, or questions except in those cases where the matter has previously been addressed. For the same reason, IEEE does not respond to interpretation requests. Any person who would like to participate in evaluating comments or in revisions to an IEEE standard is welcome to join the relevant IEEE working group. You can indicate interest in a working group using the Interests tab in the Manage Profile & Interests area of the IEEE SA myProject system.[1] An IEEE Account is needed to access the application.

Comments on standards should be submitted using the Contact Us form.[2]

Laws and regulations

Users of IEEE Standards documents should consult all applicable laws and regulations. Compliance with the provisions of any IEEE Standards document does not constitute compliance to any applicable regulatory requirements. Implementers of the standard are responsible for observing or referring to the applicable regulatory requirements. IEEE does not, by the publication of its standards, intend to urge action that is not in compliance with applicable laws, and these documents may not be construed as doing so.

[1] Available at: https://development.standards.ieee.org/myproject-web/public/view.html#landing.
[2] Available at: https://standards.ieee.org/content/ieee-standards/en/about/contact/index.html.

Documents
Document Sharing Hub
Authorized licensed use limited to: Tsinghua University. Downloaded on February 24,2026 at 08:58:31 UTC from IEEE Xplore. Restrictions apply.
Full document details: IEEE 11073-10421-2023

Data privacy

Users of IEEE Standards documents should evaluate the standards for considerations of data privacy and data ownership in the context of assessing and using the standards in compliance with applicable laws and regulations.

Copyrights

IEEE draft and approved standards are copyrighted by IEEE under U.S. and international copyright laws. They are made available by IEEE and are adopted for a wide variety of both public and private uses. These include both use, by reference, in laws and regulations, and use in private self-regulation, standardization, and the promotion of engineering practices and methods. By making these documents available for use and adoption by public authorities and private users, neither IEEE nor its licensors waive any rights in copyright to the documents.

Photocopies

Subject to payment of the appropriate licensing fees, IEEE will grant users a limited, non-exclusive license to photocopy portions of any individual standard for company or organizational internal use or individual, non-commercial use only. To arrange for payment of licensing fees, please contact Copyright Clearance Center, Customer Service, 222 Rosewood Drive, Danvers, MA 01923 USA; +1 978 750 8400; https://www.copyright.com/. Permission to photocopy portions of any individual standard for educational classroom use can also be obtained through the Copyright Clearance Center.

Updating of IEEE Standards documents

Users of IEEE Standards documents should be aware that these documents may be superseded at any time by the issuance of new editions or may be amended from time to time through the issuance of amendments, corrigenda, or errata. An official IEEE document at any point in time consists of the current edition of the document together with any amendments, corrigenda, or errata then in effect.

Every IEEE standard is subjected to review at least every 10 years. When a document is more than 10 years old and has not undergone a revision process, it is reasonable to conclude that its contents, although still of some value, do not wholly reflect the present state of the art. Users are cautioned to check to determine that they have the latest edition of any IEEE standard.

In order to determine whether a given document is the current edition and whether it has been amended through the issuance of amendments, corrigenda, or errata, visit IEEE Xplore or contact IEEE.[3] For more information about the IEEE SA or IEEE's standards development process, visit the IEEE SA Website.

Errata

Errata, if any, for all IEEE standards can be accessed on the IEEE SA Website.[4] Search for standard number and year of approval to access the web page of the published standard. Errata links are located under the Additional Resources Details section. Errata are also available in IEEE Xplore. Users are encouraged to periodically check for errata.

[3] Available at: https://ieeexplore.ieee.org/browse/standards/collection/ieee.
[4] Available at: https://standards.ieee.org/standard/index.html.

Documents
Document Sharing Hub
Authorized licensed use limited to: Tsinghua University. Downloaded on February 24,2026 at 08:58:31 UTC from IEEE Xplore. Restrictions apply.
Full document details: IEEE 11073-10421-2023

Patents

IEEE standards are developed in compliance with the IEEE SA Patent Policy.[5]

Attention is called to the possibility that implementation of this standard may require use of subject matter covered by patent rights. By publication of this standard, no position is taken by the IEEE with respect to the existence or validity of any patent rights in connection therewith. If a patent holder or patent applicant has filed a statement of assurance via an Accepted Letter of Assurance, then the statement is listed on the IEEE SA Website at https://standards.ieee.org/about/sasb/patcom/patents.html. Letters of Assurance may indicate whether the Submitter is willing or unwilling to grant licenses under patent rights without compensation or under reasonable rates, with reasonable terms and conditions that are demonstrably free of any unfair discrimination to applicants desiring to obtain such licenses.

Essential Patent Claims may exist for which a Letter of Assurance has not been received. The IEEE is not responsible for identifying Essential Patent Claims for which a license may be required, for conducting inquiries into the legal validity or scope of Patents Claims, or determining whether any licensing terms or conditions provided in connection with submission of a Letter of Assurance, if any, or in any licensing agreements are reasonable or non-discriminatory. Users of this standard are expressly advised that determination of the validity of any patent rights, and the risk of infringement of such rights, is entirely their own responsibility. Further information may be obtained from the IEEE Standards Association.

IMPORTANT NOTICE

Technologies, application of technologies, and recommended procedures in various industries evolve over time. The IEEE standards development process allows participants to review developments in industries, technologies, and practices, and to determine what, if any, updates should be made to the IEEE standard. During this evolution, the technologies and recommendations in IEEE standards may be implemented in ways not foreseen during the standard's development. IEEE standards development activities consider research and information presented to the standards development group in developing any safety recommendations. Other information about safety practices, changes in technology or technology implementation, or impact by peripheral systems also may be pertinent to safety considerations during implementation of the standard. Implementers and users of IEEE Standards documents are responsible for determining and complying with all appropriate safety, security, environmental, health, and interference protection practices and all applicable laws and regulations.

[5] Available at: https://standards.ieee.org/about/sasb/patcom/materials.html.

Documents
Document Sharing Hub

Authorized licensed use limited to: Tsinghua University. Downloaded on February 24,2026 at 08:58:31 UTC from IEEE Xplore. Restrictions apply.

Full document details: IEEE 11073-10421-2023

Participants

At the time this IEEE standard was completed, the Personal Health Device Working Group had the following membership:

Daidi Zhong, *Chair*
Malcolm Clarke, *Vice-Chair*
Raymond Krasinski, *Secretary*

Karsten Aalders
Charles R. Abbruscato
Nabil Abujbara
Maher Abuzaid
James Agnew
Manfred Aigner
Jorge Alberola
David Aparisi
Lawrence Arne
Diego B. Arquillo
Serafin Arroyo
Muhammad Asim
Kit August
Doug Baird
David Baker
Anindya Bakshi
Ananth Balasubramanian
Sunlee Bang
M. Jonathan Barkley
Gilberto Barrón
David Bean
John Bell
Olivia Bellamou-Huet
Rudy Belliardi
Daniel Bernstein
George A. Bertos
Chris Biernacki
Ola Björsne
Thomas Blackadar
Thomas Bluethner
Douglas P. Bogia
Xavier Boniface
Shannon Boucousis
Lyle G. Bullock, Jr.
Bernard Burg
Chris Burns
Jeremy Byford-Rew
Satya Calloji
Carole C. Carey
Craig Carlson
Santiago Carot-Nemesio
Seungchul Chae
Yao Chen
Jing Cheng
Peggy Chien
David Chiu
Jinyong Choi
Chia-Chin Chong
Jinhan Chung
John A. Cogan
John T. Collins
Cory Condek
Todd H. Cooper
Sandra Costanzo
Douglas Coup
Nigel Cox
Hans Crommenacker
Tomio Crosley
Allen Curtis
Jesús Daniel Trigo
David Davenport
Russell Davis
Sushil K. Deka
Ciro de la Vega
Jim Dello Stritto
Kent Dicks
Hyoungho Do
Fangjie Dong
Jonathan Dougherty
Xiaolian Duan
Sourav Dutta
Jakob Ehrensvard
Fredrik Einberg
Javier Escayola Calvo
Mark Estes
Leonardo Estevez
Michael Faughn
Bosco T. Fernandes
Christoph Fischer
Morten Flintrup
Russell Foster
Eric Freudenthal
Matthias Frohner
Ken Fuchs
Jing Gao
Marcus Garbe
John Garguilo
Liang Ge
Rick Geimer
Igor Gejdos
Ferenc Gerbovics
Alan Godfrey
Nicolae Goga
Julian Goldman
Raul Gonzalez Gomez
Chris Gough
Channa Gowda
Charles M. Gropper
Amit Gupta
Jeff Guttmacher
Rasmus Haahr
Christian Habermann
Michael Hagerty
Jerry Hahn
Robert Hall
Shu Han
Nathaniel Hamming
Rickey L. Hampton
Sten Hanke
Aki Harma
Jordan Hartmann
Kai Hassing
Avi Hauser
Nathaniel Heintzman
Charles Henderson
Jun-Ho Her
Timothy L. Hirou
Allen Hobbs
Alex Holland
Arto Holopainen
Kris Holtzclaw
Robert Hoy
Anne Huang
Guiling Huang
Haofei Huang
Zhiyong Huang
David Hughes
Robert D. Hughes
Jiyoung Huh
Hugh Hunter
Philip O. Isaacson
Atsushi Ito
Michael Jaffe
Praduman Jain
Zongbo Jiang
Hu Jin
Danny Jochelson
Akiyoshi Kabe
Steve Kahle
Tomio Kamioka
James J. Kang
Kei Kariya
Andy Kaschl
Junzo Kashihara
Ralph Kent
Laurie M. Kermes
Sanjay R. Kharche
Ahmad Kheirandish
Junhyung Kim
Minho Kim

Copyright © 2023 IEEE. All rights reserved.

Documents
Document Sharing Hub

Authorized licensed use limited to: Tsinghua University. Downloaded on February 24,2026 at 08:58:31 UTC from IEEE Xplore. Restrictions apply.

Full document details: IEEE 11073-10421-2023

Min-Joon Kim
Taekon Kim
Tetsuya Kimura
Michael J. Kirwan
Alfred Kloos
Edward Koch
Jeongmee Koh
Jean-Marc Koller
John Koon
Patty Krantz
Alexander Kraus
Ramesh Krishna
Geoffrey Kruse
Falko Kuester
Rafael Lajara
Pierre Landau
Jaechul Lee
JongMuk Lee
Kyong Ho Lee
Rami Lee
Sungkee Lee
Woojae Lee
Jing Li
Qiong Li
Xiangchen Li
Patrick Lichter
Jisoon Lim
Wei-Jung Lo
Charles Lowe
Don Ludolph
Ling Luo
Christian Luszick
Bob MacWilliams
Srikkanth Madhurbootheswaran
Miriam L. Makhlouf
M. Sabarimalai Manikandan
Romain Marmot
Sandra Martinez
Miguel Martínez de EspronceddaCámara
Peter Mayhew
Jim McCain
LászlóMeleg
Alexander Mense
Behnaz Minaei
Jinsei Miyazaki
Madhu Mohan
Erik Moll
Darr Moore
Chris Morel
Carsten Mueglitz
Soundharya Nagasubramanian
Alex Neefus
Trong-Nghia Nguyen-Dobinsky
Michael E. Nidd
Jim Niswander
Hiroaki Niwamoto
Thomas Norgall
Yoshiteru Nozoe
Abraham Ofek
Brett Olive
BegonyaOtal
Marco Paleari
Bud Panjwani
Carl Pantiskas
Harry P. Pappas
Hanna Park
Jong-Tae Park
Myungeun Park
Phillip E. Pash
TongBi Pei
Soren Petersen
James Petisce
Peter Piction
Michael Pliskin
Varshney Prabodh
Jeff Price
Harald Prinzhorn
Lifei Qian
Harry Qiu
Tanzilur Rahman
Lin Ran
Phillip Raymond
Terrie Reed
Barry Reinhold
Brian Reinhold
Melvin I. Reynolds
John G. Rhoads
Jeffrey S. Robbins
Chris Roberts
Moskowitz Robert
Stefan Robert
Scott M. Robertson
Timothy Robertson
Sean Rocke
David Rosales
Bill Saltzstein
Giovanna Sannino
Jose A. Santos-Cadenas
Stefan Sauermann
John Sawyer
Alois Schloegl
Paul S. Schluter
Mark G. Schnell
Richard A. Schrenker
Antonio Scorpiniti
KwangSeok Seo
Riccardo Serafin
Sid Shaw
Frank Shen
Min Shih
Mazen Shihabi
Redmond Shouldice
Sternly K. Simon
Marjorie Skubic
Robert Smith
Ivan Soh
Motoki Sone
Emily Sopensky
Rajagopalan Srinivasan
Nicholas Steblay
Lars Steubesand
John (Ivo) Stivoric
Hermanni Suominen
Lee Surprenant
Ravi Swami
Ray Sweidan
Na Tang
Haruyuyki Tatsumi
Isabel Tejero
Tom Thompson
Jonas Tirén
Janet Traub
Gary Tschautscher
Masato Tsuchid
Ken Tubman
Akib Uddin
Sunil Unadkat
Fabio Urbani
Philipp Urbauer
Laura Vanzago
Alpo Värri
Andrei Vasilateanu
Dalimar Velez
Martha Velezis
Rudi Voon
Isobel Walker
David Wang
Jerry P. Wang
Shiwei Wang
Yao Wang
Yi Wang
Steve Warren
Fujio Watanabe
Toru Watsuji
Kathleen Wible
Paul Williamson
Jia-Rong Wu
Will Wykeham
Ariton Xhafa
Ricky Yang
Melanie S. Yeung
Qiang Yin
Done-Sik Yoo
Zhi Yu
Jianchao Zeng
Jason Zhang
Zerui Zhang
Shiwei Zhao
Liang Zheng
Yuanhong Zhong
Qing Zhou
Miha Zoubek
Szymon Zyskoter

Copyright © 2023 IEEE. All rights reserved.

Documents
Document Sharing Hub

Authorized licensed use limited to: Tsinghua University. Downloaded on February 24,2026 at 08:58:31 UTC from IEEE Xplore. Restrictions apply.

Full document details: IEEE 11073-10421-2023

The following members of the individual Standards Association balloting group voted on this standard. Balloters may have voted for approval, disapproval, or abstention.

Robert Aiello
Cheryl Alexander Wang
Bjoern Andersen
Pradeep Balachandran
Malcolm Clarke
Javier Espina
Michael Faughn
Ken Fuchs
Charles M. Gropper
Werner Hoelzl
Piotr Karocki
Stuart Kerry
Raymond Krasinski
H. Moll
Rajesh Murthy
Bansi Patel
Scott Robertson
Stefan Schlichting
Walter Struppler
John Vergis
Yu Yuan
Oren Yuen
Daidi Zhong

When the IEEE SA Standards Board approved this standard on 30 March 2023, it had the following membership:

David J. Law, *Chair*
Ted Burse, *Vice Chair*
Gary Hoffman, *Past Chair*
Konstantinos Karachalios, *Secretary*

Sara R. Biyabani
Doug Edward
Ramy Ahmed Fathy
Guido R. Hiertz
Yousef Kimiagar
Joseph L. Koepfinger*
Thomas Koshy
John D. Kulick
Joseph S. Levy
Howard Li
Johnny Daozhuang Lin
Gui Lin
Xiaohui Liu
Kevin W. Lu
Daleep C. Mohla
Andrew Myles
Paul Nikolich
Annette D. Reilly
Robby Robson
Lei Wang
F. Keith Waters
Karl Weber
Philip B. Winston
Don Wright

*Member Emeritus

Copyright © 2023 IEEE. All rights reserved.

Documents
Document Sharing Hub

Authorized licensed use limited to: Tsinghua University. Downloaded on February 24,2026 at 08:58:31 UTC from IEEE Xplore. Restrictions apply.

Full document details: IEEE 11073-10421-2023

Introduction

This introduction is not part of IEEE Std 11073-10421™-2023, Health Informatics—Device Interoperability—Part 10421: Personal Health Device Communication—Device Specialization—Peak Expiratory Flow Monitor (Peak Flow).

The object classes and attributes in this standard are identified by nomenclature codes. Each code consists of a reference identifier (RefID) string and an integer code value. By using a consistent nomenclature, interoperability is enhanced as all implementations maintain the same semantic meaning for the numeric codes. This standard leverages the existing nomenclature codes in IEEE Std 11073-10101™. Between this standard, IEEE Std 11073-10101, ISO/IEEE 11073-20601, and other IEEE Std 11073-104zz, all required nomenclature codes for implementation are documented. New codes may be defined in newer versions/revisions of each of these documents. In the case of a conflict, where one term code has been assigned to two separate semantic concepts with different RefIDs, in general, the oldest definition in actual use should take precedence. The same policy applies when one RefID has two different code values assigned in different specifications. The resolution of such conflicts will be determined through joint action by the responsible working groups and other stakeholders, and any corrective action will be published as corrigenda.

NOTE—In this standard, IEEE 11073-104zz is used to refer to the collection of device specialization standards that utilize ISO/IEEE 11073-20601, where zz can be any number from 01 to 99, inclusive.[6]

[6] Notes in text, tables, and figures are given for information only and do not contain requirements needed to implement the standard.

Copyright © 2023 IEEE. All rights reserved.

Documents
Document Sharing Hub

Authorized licensed use limited to: Tsinghua University. Downloaded on February 24,2026 at 08:58:31 UTC from IEEE Xplore. Restrictions apply.

Full document details: IEEE 11073-10421-2023

Contents

1. Overview ... 13
1.1 Scope ... 13
1.2 Purpose ... 13
1.3 Word usage ... 14

2. Normative references ... 14

3. Definitions, acronyms, and abbreviations ... 14
3.1 Definitions ... 14
3.2 Acronyms and abbreviations ... 15

4. Introduction to ISO/IEEE 11073 personal health devices ... 16
4.1 General ... 16
4.2 Introduction to IEEE 11073-20601 modeling constructs ... 16
4.3 Compliance with other standards ... 17

5. Peak expiratory flow monitor device concepts and modalities ... 18
5.1 General ... 18
5.2 PEF ... 18

6. Peak expiratory flow monitor domain information model ... 20
6.1 Overview ... 20
6.2 Class extensions ... 20
6.3 Object instance diagram ... 20
6.4 Types of configuration ... 22
6.5 Medical device system object ... 22
6.6 Numeric objects ... 26
6.7 Real-time sample array objects ... 36
6.8 PM-store objects ... 39
6.9 Scanner objects ... 39
6.10 Class extension objects ... 39
6.11 Peak expiratory flow monitor information model extensibility rules ... 39

7. Peak expiratory flow monitor service model ... 39
7.1 General ... 39
7.2 Object access services ... 40
7.3 Object access event report services ... 41

8. Peak expiratory flow monitor communication model ... 41
8.1 Overview ... 41
8.2 Communications characteristics ... 41
8.3 Association procedure ... 42
8.4 Configuring procedure ... 44
8.5 Operating procedure ... 46
8.6 Time synchronization ... 47

9. Test associations ... 47
9.1 Behavior with standard configuration ... 47
9.2 Behavior with extended configurations ... 48

10. Conformance ... 48

Copyright © 2023 IEEE. All rights reserved.

Documents
Document Sharing Hub

Authorized licensed use limited to: Tsinghua University. Downloaded on February 24,2026 at 08:58:31 UTC from IEEE Xplore. Restrictions apply.

Full document details: IEEE 11073-10421-2023

10.1 Applicability 48
10.2 Conformance specification 48
10.3 Levels of conformance 49
10.4 Implementation conformance statements (ICSs) 49

Annex A (informative) Bibliography 54

Annex B (normative) Any additional ASN.1 definitions 55

Annex C (normative) Allocation of identifiers 56

Annex D (informative) Message sequence examples 57

Annex E (informative) Protocol data unit examples 59
E.1 General 59
E.2 Association information exchange 59
E.3 Configuration information exchange 62
E.4 GET MDS attributes service 66
E.5 Data reporting 67
E.6 Disassociation 69

Annex F (informative) Revision History 70

Copyright © 2023 IEEE. All rights reserved.

Documents
Document Sharing Hub

Authorized licensed use limited to: Tsinghua University. Downloaded on February 24,2026 at 08:58:31 UTC from IEEE Xplore. Restrictions apply.

Full document details: IEEE 11073-10421-2023

Health Informatics—Device Interoperability

Part 10421: Personal Health Device Communication—Device Specialization—Peak Expiratory Flow Monitor (Peak Flow)

1. Overview

1.1 Scope

The scope of this standard is to establish a normative definition of communication between personal telehealth peak flow monitoring devices (agents) and managers (e.g., cell phones, personal computers, personal health appliances, and set top boxes) in a manner that enables plug-and-play interoperability. It leverages work done in other ISO/IEEE 11073 standards including existing terminology, information profiles, application profile standards. It specifies the use of specific term codes, formats, and behaviors in telehealth environments restricting optionality in base frameworks in favor of interoperability. This standard defines a common core of functionality of a peak-flow monitoring device. The use case is restricted to personal respiratory monitoring and therefore does not include hospital-based spirometry. Continuous and high-acuity monitoring (e.g., for emergency response) are outside the scope of the use case. In the context of personal health devices, a peak flow meter is a device is used to measure the respiratory function of those managing respiratory conditions such as asthma and chronic obstructive pulmonary disease. The ability to identify declining respiratory status prior to the need for acute intervention improves the quality of life for the individual while reducing the overall costs of care. Respiratory status data are collected by a personal respiratory monitoring device and forwarded to a central data repository for review and action by a health care provider. The data are episodic in nature and are forwarded at designated intervals or when the person is symptomatic.

1.2 Purpose

This standard addresses a need for an openly defined, independent standard for controlling information exchange to and from personal health devices and managers (e.g., cell phones, personal computers, personal health appliances, and set top boxes). Interoperability is key to growing the potential market for these devices and enabling people to be better informed participants in the management of their health.

Copyright © 2023 IEEE. All rights reserved.

Documents
Document Sharing Hub

Authorized licensed use limited to: Tsinghua University. Downloaded on February 24,2026 at 08:58:31 UTC from IEEE Xplore. Restrictions apply.

Full document details: IEEE 11073-10421-2023

1.3 Word usage

The word *shall* indicates mandatory requirements strictly to be followed in order to conform to the standard and from which no deviation is permitted (*shall* equals *is required to*).[7,8]

The word *should* indicates that among several possibilities one is recommended as particularly suitable, without mentioning or excluding others; or that a certain course of action is preferred but not necessarily required (*should* equals *is recommended that*).

The word *may* is used to indicate a course of action permissible within the limits of the standard (*may* equals *is permitted to*).

The word *can* is used for statements of possibility and capability, whether material, physical, or causal (*can* equals *is able to*).

2. Normative references

The following referenced documents are indispensable for the application of this document (i.e., they must be understood and used, so each referenced document is cited in the text and its relationship to this document is explained). For dated references, only the edition cited applies. For undated references, the latest edition of the referenced document (including any amendments or corrigenda) applies.

ISO/IEEE 11073-10101, Health informatics—Device interoperability—Part 10101: Point-of-care medical device communication—Nomenclature.[9,10]

ISO/IEEE 11073-20601, Health informatics—Device interoperability—Part 20601: Personal health device communication—Application profile—Optimized exchange protocol.

See Annex A for all informative material referenced by this standard.

3. Definitions, acronyms, and abbreviations

3.1 Definitions

For the purposes of this document, the following terms and definitions apply. The *IEEE Standards Dictionary Online* should be consulted for terms not defined in this clause. [11]

agent: A node that collects and transmits personal health data to an associated manager.

class: In object-oriented modeling, a class describes the attributes, methods, and events that objects instantiate from the class utilize.

compute engine: *See:* **manager.**

[7] The use of the word *must* is deprecated and cannot be used when stating mandatory requirements; *must* is used only to describe unavoidable situations.
[8] The use of *will* is deprecated and cannot be used when stating mandatory requirements; *will* is only used in statements of fact.
[9] The IEEE standards or products referred to in this clause are trademarks of the Institute of Electrical and Electronics Engineers, Inc.
[10] ISO/IEC publications are available from the International Organization for Standardization (https://www.iso.org/) and the American National Standards Institute (https://www.ansi.org/).
[11] *IEEE Standards Dictionary Online* is available at: http://dictionary.ieee.org. An IEEE Account is required for access to the dictionary, and one can be created at no charge on the dictionary sign-in page.

Copyright © 2023 IEEE. All rights reserved.

Documents
Document Sharing Hub

Authorized licensed use limited to: Tsinghua University. Downloaded on February 24,2026 at 08:58:31 UTC from IEEE Xplore. Restrictions apply.

Full document details: IEEE 11073-10421-2023

device: A term used to refer to a physical apparatus implementing either an agent or a manager role.

forced expiratory volume: The expiratory volume of a subject under forced conditions at time t in seconds, measured from time zero.

handle: An unsigned 16-bit number that is locally unique and identifies one of the object instances within an agent.

manager: A node receiving data from one or more agent systems. Some examples of managers include a cellular phone, health appliance, set top box, or a computer system.

obj-handle: *See:* **handle.**

object: In object-oriented modeling, a particular instantiation of a class. The instantiation realizes attributes, methods, and events from the class.

peak expiratory flow: maximum flow measured at the mouth during an expiration delivered with maximal force starting immediately after achieving maximum lung inflation.

peak expiratory flow monitor: A medical device used to measure the respiratory function of those managing respiratory conditions such as asthma.

personal best: This value is determined by a healthcare professional or based on predicted average peak flow and is typically the highest peak expiratory flow (PEF) reading an individual can obtain while in peak condition.

personal health device: A device used in personal health applications.

personal telehealth device: *See:* **personal health device.**

predicted average peak flow: The value of peak expiratory flow that is calculated based on the user's age, height, and sex to serve as a benchmark for the user's measurements.

time zero: In the context of this document, time zero is the instant at which a user starts blowing into the peak-flow monitor to record a measurement.

3.2 Acronyms and abbreviations

APDU	application protocol data unit
ASN.1	Abstract Syntax Notation One
DIM	domain information model
EUI-64	extended unique identifier (64 bits)
FEV	forced expiratory volume
FEV1	forced expiratory volume in 1 s
FEV6	forced expiratory volume in 6 s
ICS	implementation conformance statements

Copyright © 2023 IEEE. All rights reserved.

Documents
Document Sharing Hub

Authorized licensed use limited to: Tsinghua University. Downloaded on February 24,2026 at 08:58:31 UTC from IEEE Xplore. Restrictions apply.

Full document details: IEEE 11073-10421-2023

MDC	medical device communication
MDER	medical device encoding rules
MDS	medical device system
MOC	managed object class
OID	object identified
PDU	protocol data unit
PEF	peak expiratory flow
PHD	personal health device
VMO	virtual medical object
VMS	virtual medical system

4. Introduction to ISO/IEEE 11073 personal health devices

4.1 General

This standard and the remainder of the series of ISO/IEEE 11073 personal health device (PHD) standards fit in the larger context of the ISO/IEEE 11073 series of standards. The full suite of standards enables agents to interconnect and interoperate with managers and with computerized health-care information systems. See ISO/IEEE 11073-20601 for a description of the guiding principles for this series of ISO/IEEE 11073 Personal Health Device standards.

ISO/IEEE 11073-20601 supports the modeling and implementation of an extensive set of personal health devices. This standard defines aspects of the peak expiratory flow monitor device. It describes all aspects necessary to implement the application layer services and data exchange protocol between an ISO/IEEE 11073 PHD peak expiratory flow monitor agent and a manager. This standard defines a subset of the objects and functionality contained in ISO/IEEE 11073-20601 and extends and adds definitions where appropriate. All new definitions are given in Annex B in Abstract Syntax Notation One (ASN.1) [B8]. Nomenclature codes referenced in this standard, which are not defined in ISO/IEEE 11073-20601, are normatively defined in Annex C.

4.2 Introduction to IEEE 11073-20601 modeling constructs

4.2.1 General

The ISO/IEEE 11073 series of standards, and in particular ISO/IEEE 11073-20601, is based on an object-oriented systems management paradigm. The overall system model is divided into three principal components: the domain information model (DIM), the service model, and the communication model. See ISO/IEEE 11073-20601 for a detailed description of the modeling constructs.

Copyright © 2023 IEEE. All rights reserved.

Documents
Document Sharing Hub

Authorized licensed use limited to: Tsinghua University. Downloaded on February 24,2026 at 08:58:31 UTC from IEEE Xplore. Restrictions apply.

Full document details: IEEE 11073-10421-2023

4.2.2 Domain information model

The DIM is a hierarchical model that describes an agent as a set of objects. These objects and their attributes represent the elements that control behavior and report on the status of the agent and data that an agent can communicate to a manager. Communication between the agent and the manager is defined by the application protocol in ISO/IEEE 11073-20601.

4.2.3 Service model

The service model defines the conceptual mechanisms for the data exchange services. Such services are mapped to messages that are exchanged between the agent and the manager. Protocol messages within the ISO/IEEE 11073 series of standards are defined in ASN.1. The messages defined in ISO/IEEE 11073-20601 can coexist with messages defined in other standard application profiles defined in the ISO/IEEE 11073 series of standards.

4.2.4 Communication model

In general, the communication model supports the topology of one or more agents communicating over logical point-to-point connections to a single manager. For each logical point-to-point connection, the dynamic system behavior is defined by a connection state machine as specified in ISO/IEEE 11073-20601. The security of this communication is largely determined by, but not limited to, the physical security of the device along with the inherent security of the underlying transports. Additional security may be defined by future revisions of ISO/IEEE 11073-20601.

4.2.5 Implementing the models

An agent implementing this standard shall implement all mandatory elements of the information, service, and communication models as well as all conditional elements where the condition is met. The agent should implement the recommended elements, and it may implement any combination of the optional elements. A manager implementing this standard shall utilize at least one of the mandatory, conditional, recommended, or optional elements. In this context, “utilize” means to use the element as part of the primary function of the manager device. For example, a manager whose primary function is to display data would need to display a piece of data in the element in order to utilize it.

4.3 Compliance with other standards

Devices that comply with this standard may also be required to comply with other domain- and device-specific standards that supersede the requirements of this standard with respect to issues including safety, reliability, and risk management. A user of this standard is expected to be familiar with all other such standards that apply and to comply with any higher specifications thus imposed.

Typically, medical devices should comply with the IEC 60601-1 [B1] base standards with respect to electrical and mechanical safety and any device-specific standard as might be defined in the IEC 60601-2 [B2] series of standards. Software aspects may apply through standards such as IEC 62304 [B3]. Devices that comply with this standard implement higher layers of network software and utilize lower layers as appropriate to the application. The requirements for the performance of such applications and conformance are defined elsewhere and are outside the scope of this standard. Moreover, the use of any medical equipment is subject to risk assessment and risk management appropriate to the application. Some relevant examples are ISO 14971 [B5] and IEC 80001-1 [B4]. The requirements of such risk assessment, risk management, and conformance are outside the scope of this standard. The applicable versions of the referenced safety-related standards may differ per country.

Copyright © 2023 IEEE. All rights reserved.

Documents
Document Sharing Hub

Authorized licensed use limited to: Tsinghua University. Downloaded on February 24,2026 at 08:58:31 UTC from IEEE Xplore. Restrictions apply.

Full document details: IEEE 11073-10421-2023

5. Peak expiratory flow monitor device concepts and modalities

5.1 General

This clause presents the general concepts of peak expiratory flow monitor devices. In the context of personal health devices in this family of standards, a peak expiratory flow monitor is a device that measures the respiratory function of those managing respiratory conditions such as asthma. In general, the peak expiratory flow monitor will take measurements of the lung function of the subject by recording the flow and volume of air during exhalation with maximum effort. Typically, a peak expiratory flow monitor accomplishes this task by measuring and recording peak expiratory flow (PEF) and forced expiratory volume in 1 s (FEV1). In some cases, forced expiratory volume in 6 s (FEV6) is also measured.

The methods to determine PEF and forced expiratory volume (FEV) vary, but common methods include the use of pressure sensors, mechanical turbines, piezo-electric crystals, and so on as sensors. The subject is required to deliver an expiration with maximal force into a mouthpiece that channels the air to the sensor. Typically, the sensor will measure airflow to determine PEF, and from the area of the tube in which the sensor is placed, the volume (FEV1 or FEV6) may be calculated.

5.2 PEF

PEF is a measure of how fast an individual can push air out of their lungs after taking maximal inspiration and followed by a maximal expiration. PEF is measured in liters per minute. Figure 1 shows the typical rate of flow during the measurement of PEF with the maximal value at around 0.1 s.

Copyright © 2023 IEEE. All rights reserved.

Documents
Document Sharing Hub

Authorized licensed use limited to: Tsinghua University. Downloaded on February 24,2026 at 08:58:31 UTC from IEEE Xplore. Restrictions apply.

Full document details: IEEE 11073-10421-2023

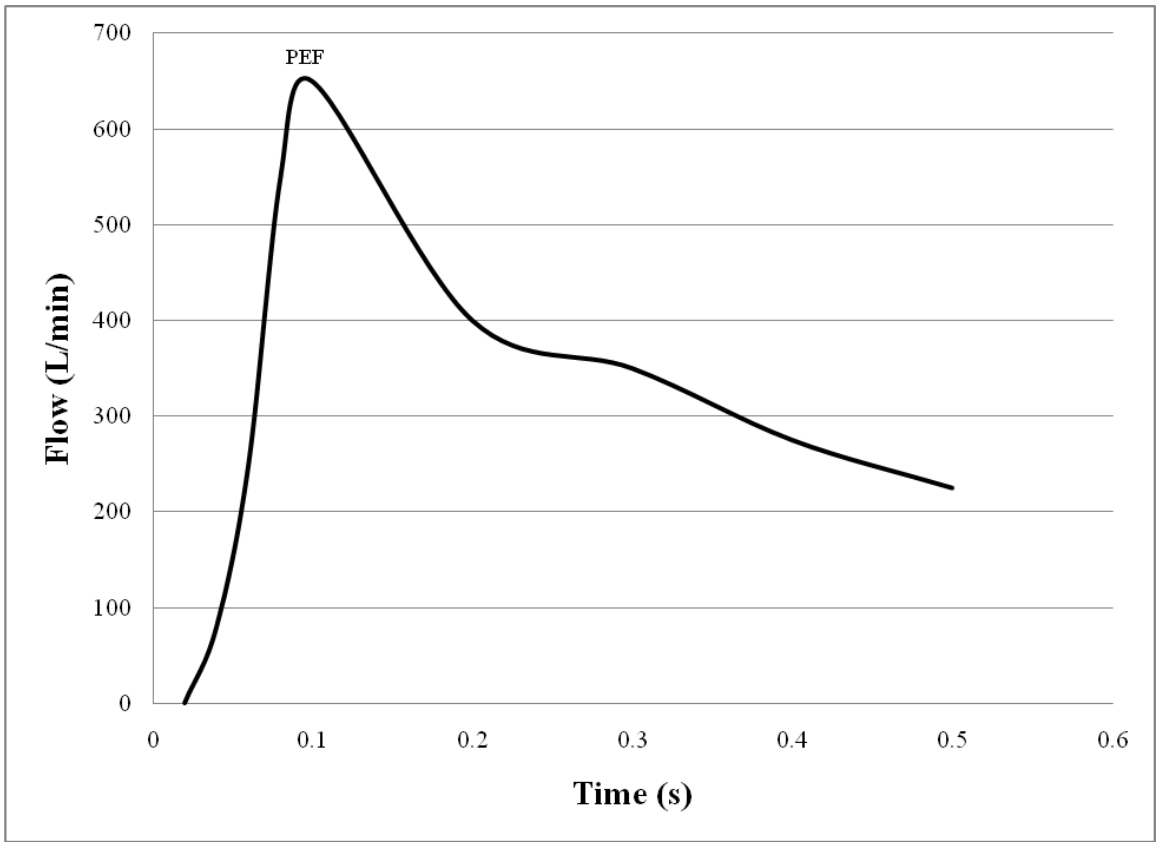

Figure 1—PEF waveform (representation only—does not correspond to real values)

5.3 Personal best

Personal best is not a constantly measured value; rather, it is determined by a health-care professional or based on predicted average peak flow. The personal best is typically the highest PEF reading an individual can obtain while in peak condition. Personal best, as a value of PEF, is measured in liters per minute.

5.4 FEV1

FEV1 is a measure of forced expiratory volume. It is a measure of the expiratory volume of a subject under forced conditions at 1 s, measured from time zero (the time at which the subject starts the expiration). FEV1 is measured in liters. Figure 2 shows a typical pulmonary waveform where FEV1 is the total volume of air and would be calculated as the area under the curve between 0 s and 1 s.

Copyright © 2023 IEEE. All rights reserved.

Authorized licensed use limited to: Tsinghua University. Downloaded on February 24,2026 at 08:58:31 UTC from IEEE Xplore. Restrictions apply.

Full document details: IEEE 11073-10421-2023

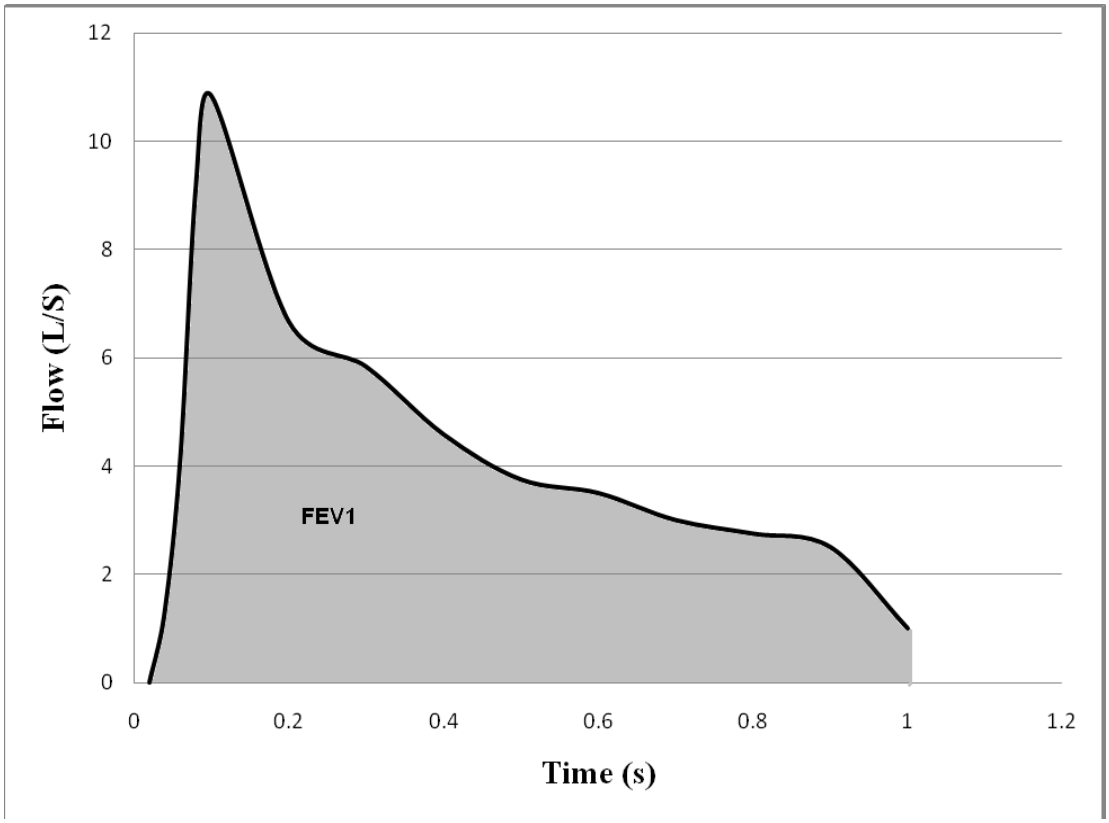

Figure 2—FEV1 waveform (representation only—does not correspond to real values)

5.5 FEV6

FEV6 is a measure of the forced expiratory volume of a subject under forced conditions at 6 s measured from time zero. FEV6 is measured in liters.

6. Peak expiratory flow monitor domain information model

6.1 Overview

This subclause describes the domain information model of the peak expiratory flow monitor.

6.2 Class extensions

In this standard, no class extensions are defined with respect to ISO/IEEE 11073-20601.

6.3 Object instance diagram

The object instance diagram of the peak expiratory flow monitor domain information model, defined for the purposes of this standard, is shown in Figure 3.

Copyright © 2023 IEEE. All rights reserved.

Documents
Document Sharing Hub

Authorized licensed use limited to: Tsinghua University. Downloaded on February 24,2026 at 08:58:31 UTC from IEEE Xplore. Restrictions apply.

Full document details: IEEE 11073-10421-2023

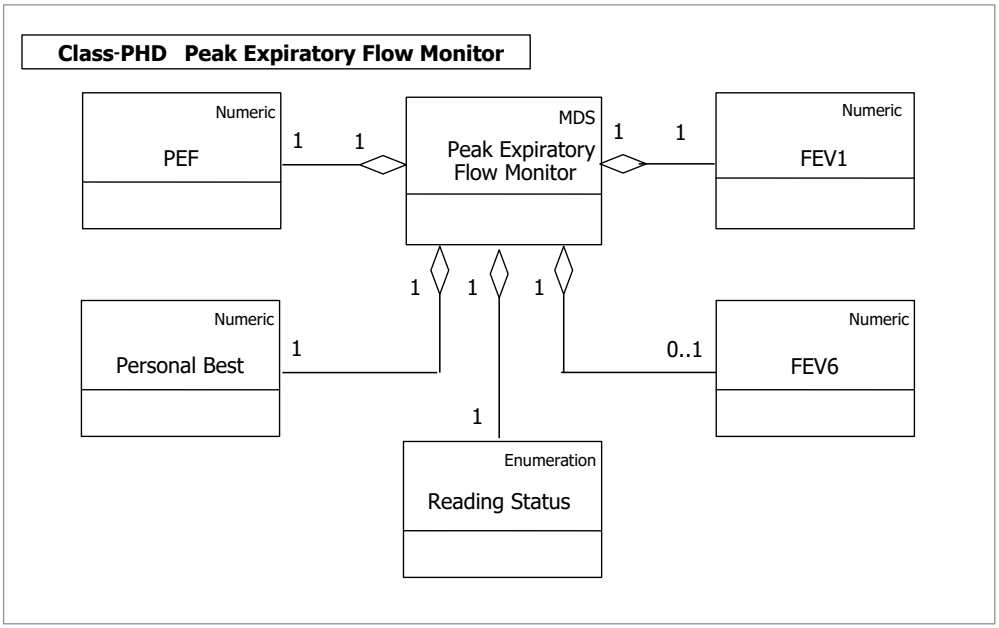

Figure 3—Peak expiratory flow monitor—domain information model

The objects of the DIM, as shown in Figure 3, are described in 6.5 through 6.10. This includes the medical device system (MDS) object (6.5), the numeric objects (6.6), the real-time sample array objects (6.7), the enumeration objects (6.8), the PM-store objects (6.9), and the scanner objects (6.10). Subclause 6.11 describes the rules for extending the peak expiratory flow monitor information model beyond elements as described in this standard. Each subclause that describes an object of the peak expiratory flow monitor contains the following information:

— The nomenclature code is used to identify the class of the object. One example where this code is used is the configuration event, where the object class is reported for each object. This allows the manager to determine whether the class of the object being specified is a numeric, real-time sample array, enumeration, scanner, or PM-store class.

— The attributes of the object. Each object has attributes that represent and convey information on the physical device and its data sources. Each object has a Handle attribute that identifies the object instance within an agent. Attribute values are accessed and modified using methods such as GET and SET. Attribute types are defined using ASN.1. The ASN.1 definitions for new attribute types specific to this standard are in Annex B, and the ASN.1 definitions for existing attribute types referenced in this standard are in ISO/IEEE 11073-20601.

— The methods available on the object.

— The potential events generated by the object. The data are sent to the manager using events.

— The available services such as getting or setting attributes.

The attributes for each class are defined in tables that specify the name of the attribute, its value, and its qualifier. The qualifiers mean: M — Attribute is Mandatory, C — Attribute is Conditional and depends on the condition stated in the Remark or Value column (if ISO/IEEE 11073-20601 is referenced, then it contains the conditions), R — Attribute is Recommended, NR — Attribute is Not Recommended, and O — Attribute is Optional. Mandatory attributes shall be implemented by an agent. Conditional attributes shall be implemented if the condition applies and may be implemented otherwise. Recommended attributes should be implemented by the agent. Not recommended attributes should not be implemented by the agent.

Copyright © 2023 IEEE. All rights reserved.
Documents
Document Sharing Hub
Authorized licensed use limited to: Tsinghua University. Downloaded on February 24,2026 at 08:58:31 UTC from IEEE Xplore. Restrictions apply.
Full document details: IEEE 11073-10421-2023