Institute of Environmental Sciences and Technology

IEST-RP-CC013.3

Contamination Control Division
Recommended Practice 013.3

Calibration Procedures and Guidelines for Select Equipment Used in Testing Cleanrooms and Other Controlled Environments

1827 Walden Office Square, Suite 400 |
Schaumburg, IL 60173 USA
Phone: (847) 981-0100 • Fax: (847) 981-4130
E-mail: information@iest.org • Web: www.iest.org

Documents
Document Sharing Hub

Full document details: IEST RP-CC013.3 2017

This Recommended Practice is published by the Institute of Environmental Sciences and Technology to advance the technical and engineering sciences. Use of this document is entirely voluntary, and determination of its applicability and suitability for any particular use is solely the responsibility of the user. Use of this Recommended Practice does not imply any warranty or endorsement by IEST.

This Recommended Practice was prepared by and is under the jurisdiction of Working Group 013 of the IEST Contamination Control Division.

Copyright © 2012 by the Institute of Environmental Sciences and Technology

Second printing, July 2017

ISBN: 978-1-937280-04-8 (Electronic Format)
ISBN: 978-1-937280-05-5 (Print Format)

PROPOSAL FOR IMPROVEMENT: The Working Groups of the Institute of Environmental Sciences and Technology are continually working on improvements to their Recommended Practices and Reference Documents. Suggestions from users of these documents are welcome. If you have a suggestion regarding this document, please use the online Proposal for Improvement form found on the IEST website at www.iest.org.

Institute of Environmental Sciences and Technology
1827 Walden Office Square, Suite 400 |
Schaumburg, IL 60173 USA
Phone: (847) 981-0100 • Fax: (847) 981-4130
E-mail: information@iest.org • Web: www.iest.org

Documents
Document Sharing Hub

Full document details: IEST RP-CC013.3 2017

Calibration Procedures and Guidelines for Select Equipment Used in Testing Cleanrooms and Other Controlled Environments

IEST-RP-CC013.3

CONTENTS

SECTION

1 SCOPE AND LIMITATIONS....5
2 REFERENCES....5
3 TERMS AND DEFINITIONS....6
4 BACKGROUND AND PURPOSE....8
5 GENERAL PROCEDURES....8
6 AEROSOL GENERATORS....10
7 PHOTOMETERS....11
8 ANEMOMETERS....15
9 AIRFLOW CAPTURE HOODS....16
10 TEMPERATURE MEASUREMENT SYSTEMS AND DEVICES....17
11 PRESSURE AND VACUUM GAUGES....21
12 POLYMER MICROSPHERE (PSL) GENERATORS....25
13 AEROSOL DILUTERS....26
14 CONDENSATION NUCLEI COUNTERS....27

FIGURE

1 DETAILS OF A LASKIN NOZZLE....10
2 SETUP FOR VERIFYING A LASKIN-NOZZLE-TYPE DOP GENERATOR....10
3 100 µG/L AEROSOL SOURCE....11
4 PRESSURE/VACUUM ACCURACY....23
5 VACUUM ACCURACY....24
6 PRESSURE ACCURACY USING A DEADWEIGHT TESTER STANDARD....24
7 RESTRICTION DILUTER....26
8 AIRFLOW DILUTERS....27
C1 TYPES OF WIND TUNNELS (FROM WIND TUNNELS OF NASA)....31

Documents Document Sharing Hub

Full document details: IEST RP-CC013.3 2017

TABLE

1 RECOMMENDED INITIAL CALIBRATION INTERVALS....8
D1 ACCURACY OF ICE BATHS....32
D2 THERMOCOUPLE (T/C) TYPE LETTER DESIGNATIONS....33
D3 RESISTANCE TEMPERATURE DEVICE (RTD) SENSORS....33
D4 "AS FOUND" UUT READINGS....34

APPENDIX

A PROPER INSTRUMENT CARE PROTOCOL....29
B EXAMPLES OF PHOTOMETER TEST PROCEDURES....30
C WIND TUNNELS....31
D TEMPERATURE MEASUREMENT SYSTEMS AND DEVICES....32
E AIRFLOW DILUTION SETUP 10:1 EXAMPLE....35
F BIBLIOGRAPHY....36

 © IEST 2012 All rights reserved

Documents
Document Sharing Hub
Full document details: IEST RP-CC013.3 2017

Institute of Environmental Sciences and Technology
Contamination Control Division
Recommended Practice 013.3

Calibration Procedures and Guidelines for Select Equipment Used in Testing Cleanrooms and Other Controlled Environments

IEST-RP-CC013.3

1 SCOPE AND LIMITATIONS

1.1 Scope

This Recommended Practice (RP) covers procedures for calibrating and verifying equipment used in characterizing cleanrooms and for determining intervals of calibration. The RP includes general procedures for calibrating aerosol generators, photometers, anemometers, airflow capture hoods, temperature measurement systems and devices, pressure and vacuum gauges, polymicrosphere (PSL) generators, aerosol diluters, and condensation nuclei counters. Where available, references for calibrating other instruments are provided.

1.2 Limitations

Future revisions of this document will include calibration procedures for additional instruments that require procedures.

NOTE: Testing in accordance with this RP may involve hazardous materials, operations, and equipment. This RP does not purport to address all of the safety problems associated with the use of the document. It is the responsibility of the user to establish appropriate safety and health practices and to determine the applicability of regulatory limitations prior to use of this RP.

2 REFERENCES

The cited editions of the following documents are incorporated into this RP to the extent specified herein. Users are encouraged to investigate the possibility of applying the most recent editions of the references.

2.1 References and applicable documents

ANSI/NCSL Z540.3: Requirements for the Calibration of Measuring and Test Equipment.

Echols, W.H. and J.A. Young. 1963. *Studies of Portable Air-Operated Aerosol Generators.* US Naval Research Laboratory (NRL) Report 5929. Washington, DC.

IEST-RP-CC001.5: HEPA and ULPA Filters

ISO 10012:2003 Measurement management systems —Requirements for measurement processes and measuring equipment.

2.2 Sources and addresses

IEST
Institute of Environmental Sciences and Technology
1827 Walden Office Square, Suite 400 |
Schaumburg, IL 60173 USA
Phone: 847-981-0100
Fax: 847-981-4130
www.iest.org

© IEST 2012 All rights reserved.
Documents Document Sharing Hub
Full document details: IEST RP-CC013.3 2017

ISO
ISO 10012 available from:
International Organization for Standardization (ISO)
1, ch. de la Voie-Creuse,
Case postale 56
CH-1211 Geneva 20, Switzerland
Phone: +41 22 749 01 11
Fax: +41 22 749 09 47
www.iso.org

NCSL
NCSL International
2995 Wilderness Place, Suite 107
Boulder, Colorado 80301-5404, USA
Phone: 303-440-3339
Fax: 303-440-3384
www.ncsli.org

3 TERMS AND DEFINITIONS

The following terms have special meaning in this RP:

accuracy
The extent to which the value of a quantity indicated by an instrument under test agrees with the accepted value of the quantity.

aerosol diluter
A device that reduces the particle concentration by a known dilution ratio of the device. The diluters typically mix a known volume of sample air with a known volume of particle-free or filtered air to achieve dilution. The ratio of the two volumes is the dilution ratio.

aerosol diluter, restrictor
A device that reduces the particle concentration by impeding flow. Devices used for this purpose include but are not limited to hypodermic needle tubing, capillary tubing, and very small orifices.

aerosol generator
An instrument for generating aerosol.

> **Laskin nozzle type**
> A system that uses a nozzle to generate a polydisperse aerosol from a liquid, such as dioctyl phthalate (DOP), that uses a source of compressed gas as shown in the Echols and Young study, NRL 5929.
>
> **thermal polydisperse type**
> A device that generates a polydisperse aerosol from a liquid such as DOP by means of an evaporation-condensation process in the absence of a controlled nucleation. The particle size distribution and mass mean diameter of an aerosol produced by a thermal generator are measurably smaller than those of an aerosol from a Laskin nozzle.

aerosol photometer
An instrument that measures the mass concentration of an aerosol using the forward light scattering principle. At a minimum, the instrument should be capable of measuring aerosol concentrations of 100 µg/L or greater with a threshold sensitivity of at least 0.001 µg/L. These parameters indicate the photometer has a sensitivity of 0.001%.

airflow capture hood
A volumetric airflow measuring device consisting of a fabric capture bag, support frame, and flow-sensing component providing a direct readout in cubic meters per hour (m^3/hr) or cubic feet per minute (ft^3/min).

anemometer
An instrument for measuring air velocity.

> **rotating vane type**
> An instrument for measuring air velocity that contains an element that rotates in response to the airflow and converts the rotation to a velocity reading.
>
> **thermoanemometer**
> An instrument for measuring air velocity that contains an element heated by a regulated electric source and cooled by the airflow. A thermoanemometer converts the cooling effect on the element to a velocity reading.

as-found data
The data showing the response of an instrument to known standards before the instrument is adjusted or calibrated.

calibrate
To compare the measurement of a standard or instrument of unknown accuracy with another standard or instrument of known accuracy to detect, correlate, report, or minimize by adjustment any variation in the accuracy of the unknown standard or instrument.

coincidence limit
The aerosol concentration level where the presence of two or more particles in the sensing volume of the instrument at the same time causes the instrument to interpret the combined signal erroneously as resulting from one larger particle.

condensation nuclei counter (CNC)
A device for counting aerosol particles. CNCs function by saturating an aerosol sample with vapor, typically alcohol or water, and then condensing the vapor onto the particles. The particles grow by vapor deposition to a size such that the individual particles are easily detected by passing them through a focused laser light beam. Also called a condensation particle counter (CPC).

 © IEST 2012 All rights reserved
Documents Document Sharing Hub
Full document details: IEST RP-CC013.3 2017

condensation particle counter (CPC)
See condensation nuclei counter (CNC)

D50
The diameter of an aerosol particle that has a 50% counting efficiency in a CNC.

differential mobility analyzer (DMA)
A device that separates charged submicrometer aerosol based on the electrical mobility of a particle.

DOP or DEHP
The mineral oil dioctyl phthalate (DOP) or di (2-ethyhexyl) phthalate (DEHP); CAS# 117-81-7. With reference to filter testing, DOP also refers to a polydisperse aerosol of the described material.

NOTE: Throughout this document, "DOP" implies "either DOP or specified alternative liquid." Currently, polyalphaolefin 4 Cst (PAO, CAS# 68649-12-7) has become widely used as a replacement for DOP.

electromotive force (EMF)
An electrical potential difference that produces or tends to produce an electrical current. The unit of measure is the volt.

hysteresis
A phenomenon that occurs in magnetic and ferromagnetic materials, as well as in the elastic, electric, and magnetic behavior of materials, in which a lag occurs between the application and the removal of a force or field and its subsequent effect. Electric hysteresis occurs when applying a varying electric field, and elastic hysteresis occurs in response to a varying force.

lag block, temperature
A solid block of metal used in a dry air temperature chamber, usually made of aluminum or copper and cylindrical in shape, intended to improve temperature stability of a temperature bath and equilibrium between the UUT and the temperature standard. Holes are drilled in one end to the appropriate length for insertion of probes.

laser aerosol spectrometer
An aerosol particle sizing instrument that measures in the nanometer to micrometer size range and typically provides the particle size distribution on a displayed graph or table with usually 16 or more size channels.

Mach number
The speed of an object moving through air, or any other fluid substance, divided by the speed of sound as it is in that substance for its particular physical conditions, including those of temperature and pressure.

mass mean diameter of aerosol
The average particle size of the mass distribution of the aerosol. Typically, since the mass of a particle varies as the cube of its diameter, most of the mass of an aerosol tends to be in the larger sizes, resulting in the mass mean being larger than its count or number mean.

mass median diameter (MMD) of aerosol
The particle diameter size that is the 50th percentile of the mass distribution of the aerosol; i.e., 50% of the mass of the aerosol is made up of particles smaller than the mass median diameter, and 50% of the mass of the aerosol is made up of particles larger than the mass median diameter.

national metrology institute (NMI)
An organization providing national or international primary test standards used in the unbroken chain of traceability of test equipment. **NOTE:** Traceability to national metrology institute standards does not always require the use of the NMI of the country in which a calibration laboratory is located.

optical particle counter (OPC)
A light-scattering instrument with display or recording means to count and size discrete particles in air and other gases. Also referred to as a discrete particle counter (DPC).

out-of-tolerance
Exceeding the values of an error permitted by the specifications or regulations for a given measuring instrument.

polyalphaolefin (PAO)
The mineral oil PAO CAS# 68649-12-7. With reference to filter testing, PAO also refers to a polydisperse aerosol of the described material.

polydisperse DOP
An aerosol having a mass median diameter (MMD) of approximately 0.45 µm, a light-scattering geometric diameter of approximately 0.72 µm, and a light-scattering mean droplet-size distribution as shown in Echols and Young, NRL 5929.

polymicrosphere generator
A generator utilizing atomizer or ultrasonic vibration principles to aerosolize polystyrene latex (PSL) microspheres at a consistent and stable concentration.

polystyrene latex (PSL) or polystyrene microspheres
Test aerosol made using solid, monodisperse polystyrene particles of a known size.

NOTE: Polystyrene microspheres do not contain natural rubber latex, which has been shown to potentially cause allergic reactions on contact with skin.

pressure, absolute
Absolute pressure is zero referenced against a perfect vacuum, so it is equal to gauge pressure plus atmospheric pressure.

Documents Document Sharing Hub
Full document details: IEST RP-CC013.3 2017

pressure, atmospheric
The force per unit area exerted against a surface by the weight of a column of air above that surface at any given point in the Earth's atmosphere.

pressure, differential
The difference in pressure between two points.

pressure, gauge
Zero referenced against ambient air pressure, so it is equal to absolute pressure minus atmospheric pressure. Negative signs are usually omitted.

resistance temperature detector (RTD)
A general term for a device that senses temperature by measuring resistance of a material. As temperature changes, the resistance of the material changes in a known predictable fashion.

Reynolds number (Re)
In fluid mechanics, a dimensionless number that gives a measure of the ratio of inertial forces to viscous forces and consequently quantifies the relative importance of these two types of forces for given flow conditions.

scanning mobility particle sizer (SMPS) spectrometer
A single or multi-component system made up of an electrostatic classifier, differential mobility analyzer, and condensation nuclei counter that will determine the total aerosol concentration across an extremely narrow particle size band.

standard conditions, airflow
The conditions for air temperature, barometric pressure, and air density, which are standard sets of conditions for experimental measurements, allowing for comparisons between different sets of data. For purposes of airflow calibration, standard conditions are 760 mm Hg (29.92 in. Hg) at 21 °C (70.0 °F) and accounting for variations in air density, i.e., relative humidity.

wind tunnel
An apparatus designed to establish near straight-line air velocities of a known magnitude at a defined spatial location with controlled characteristics such as low turbulence intensity.

NOTE: General categories of wind tunnels used in the calibration of instruments include subsonic, transsonic, and supersonic, depending on the ranges of measured air velocities.

4 BACKGROUND AND PURPOSE

This document was originated to provide calibration and verification procedures for certain instruments used to characterize cleanrooms and for other high-efficiency particulate air (HEPA) filtration testing devices. The RP includes informative references for related equipment testing standards and published procedures. Instrument care guidance is available to promote best practices for storage, transportation, and use.

5 GENERAL PROCEDURES

5.1 Selection of calibration procedures and standards

Instruments should be calibrated using nationally or internationally recognized procedures. Standards and materials used for calibration should be traceable to a national metrology institute (NMI), primary standards, or recognized equivalent. As an alternative, written procedures that provide equal or greater accuracy may be used. Calibration systems used in the calibration of test equipment should adhere to the requirement for such systems established in ANSI/NCSL Z540.3, ISO 10012:2003, or an equivalent standard.

5.2 Establishment of calibration intervals

Analytical instruments should be calibrated on a regular basis. This section describes the procedure for establishing the time period for calibration. In the absence of historical data, instruments should be calibrated at least once in the time period noted in Table 1 or following the recommendation of the manufacturer. Instruments also should be calibrated if operation appears unreliable or if any component is changed, unless data show that changing the component does not affect calibration.

 © IEST 2012 All rights reserved

Documents Document Sharing Hub
Full document details: IEST RP-CC013.3 2017

Table 1—Recommended initial calibration intervals

Aerosol Photometers	1 year
Thermoanemometers	6 months
Vane anemometers	1 year
Sound level meters	Standardize against sound level calibrator at each use
Sound level calibrators	1 year
Vibration meters	1 year
Illumination meters	1 year
Temperature measuring devices	1 year
Pressure measuring devices	1 year
Condensation nuclei counter	1 year
Airflow capture hood	per manufacturer instructions
Aerosol diluters	per manufacturer instructions
Other instruments	1 year
Initial intervals may be shortened if equipment is subjected to extensive operating time, rough handling, transportation, or severe environmental conditions. Other factors, such as quality assurance policies, also may affect these intervals.	

5.3 Procedure for revising calibration interval

a) As-found data should be obtained and recorded before an instrument is calibrated. This step is especially important if the instrument has been observed to be out of tolerance.

b) If an instrument is found to be out of accepted calibration levels, a report on the out-of-tolerance condition and as-found data should be provided with the calibration document. The unit should be adjusted, if necessary, and then calibrated using the applicable procedure.

c) If the as-found data are within calibration tolerance, the unit can be returned to service without adjustment.

d) If the unit is found within calibration tolerance for two consecutive calibration periods and the unit was not adjusted in this time, the calibration interval for this unit may be increased by not more than 50%. However, calibration intervals should not exceed one year.

e) If the unit is found out-of-tolerance in the first calibration interval after a calibration, the calibration interval should be reduced by 50%.

5.4 Instrument transportation and packaging

Shock and vibration during shipment can disturb critical instrument components, affecting calibration. If practical, local or on-site calibration facilities should be established. When shipped to other locations for calibration, instruments should be packaged so the packaging will sustain any damage and protect the instrument. Original packaging should be used to prevent shipping damage. If the packaging shows damage, the calibration should be considered suspect and the calibration of the unit should be verified, or the unit should be calibrated before use.

5.5 Calibration of test equipment

5.5.1 Pressure gauges

a) Pressure gauges used to determine operating points for aerosol generators should be calibrated and have a resolution of 6.9 kPa (1.0 psig) and an accuracy of ±6.9 kPa (±1.0 psig) at the operating pressure.

b) Differential pressure gauges such as manometers and micromanometers may require greater accuracy for other applications, including the following:

- to measure differential pressure between clean zones and surrounding areas,
- when determining filter loading, or
- to determine airflow velocity or volume when used with other devices (e.g., pitot tube, multiport sensing array, or airflow capture hood).

5.5.2 Flowmeters

Flowmeters should be calibrated and have an accuracy of ±3% or better of full scale. All flow measurements, unless specifically noted, should be ambient. Some flowmeters require correction for local environmental conditions to read ambient values.

© IEST 2012 All rights reserved.

Documents Document Sharing Hub
Full document details: IEST RP-CC013.3 2017

6 AEROSOL GENERATORS

6.1 Laskin nozzle or cold-DOP generators

6.1.1 Test equipment

a) Pressure regulator

A regulator capable of maintaining a desired pressure with a resolution of 6.9 kPa (1.0 psig).

b) Pressure gauge

A pressure gauge with a range of 0–210 kPa (0–30 psig), a resolution of 6.9 kPa (1.0 psig), and accuracy of ±3% or better of full scale.

c) Flowmeter

Flowmeter with a range of 0–100 L/min (0–3.53 ft^3/min), a resolution of 2 L/min (0.07 ft^3/min), and accuracy of ±3% or better of full scale.

6.1.2 Test procedures—verifying pressure-flow characteristics

Figure 1 shows a Model III-A Laskin nozzle that will consume 75 L/min (2.65 ft^3/min) of compressed air at a pressure of 138 kPa (20 psig) (see Appendix A in Echols and Young [NRL 5929]).

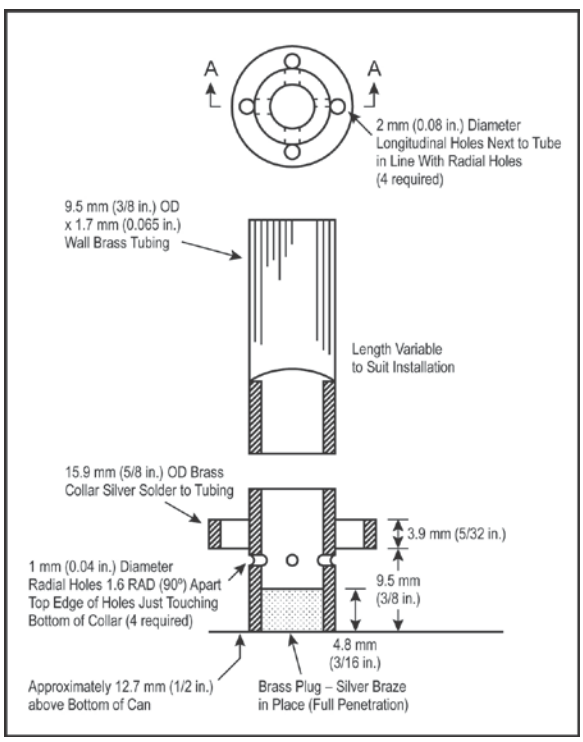

Figure 1—Details of a Laskin nozzle. Tolerances are ±0.05 mm (±0.002 in.) for the dimensions on the holes and ±0.51 mm (±0.020 in.) for all other dimensions. NOTE: Figure 1 corresponds to Figure A-2 of Echols and Young (NRL 5929).

NOTE: Cold-DOP can include air-atomizing-type nozzles that produce the equivalent particle size distribution of a Laskin nozzle, but are not covered by these calibration procedures. Consult manufacturers of such aerosol generators for calibration procedures.

a) Connect a pressure regulator, pressure gauge, and flowmeter to the generator as shown in Figure 2.

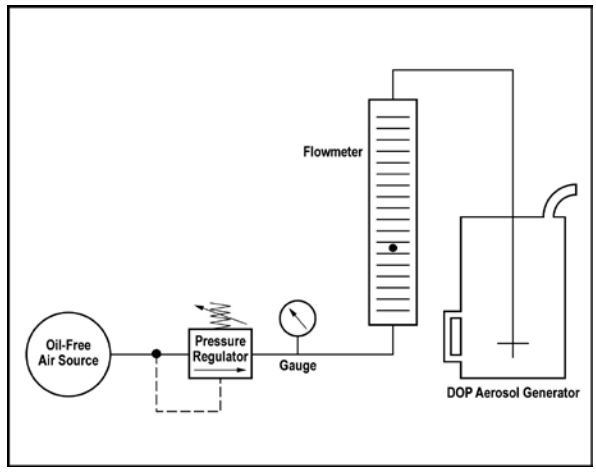

Figure 2—Setup for verifying a Laskin-nozzle-type DOP generator.

b) Adjust the pressure regulator for a pressure of 138(±3.4) kPa (20[±0.5] psig).

c) Measure the flow using the flowmeter.

d) Correct the flowmeter reading to standard conditions according to the manufacturer instructions.

e) Acceptance criteria: The flow should be 75(±7.5) L/min (2.65[±0.26] ft^3/min) at 138 kPa (20 psig).

f) If the measured flow is too low, the nozzle jets may be plugged or there may be a significant restriction between the air supply and the nozzle inside the generator. If the nozzle configuration is verified to the specifications in Figure 1, the low flow is caused by line restrictions.

g) If the measured flow is too high, the jet holes are larger than outlined in Figure 1.

h) If the generator has more than one nozzle, verification may have to be performed on multiple nozzles. Using the connection shown in Figure 2, increase the range of the flowmeter according to the number of nozzles being verified. For example, for two nozzles use a 0–200 L/min (0–7.0 ft^3/min) flowmeter.

 © IEST 2012 All rights reserved

Documents Document Sharing Hub
Full document details: IEST RP-CC013.3 2017

6.2 Thermal polydisperse generators

WARNING: Due to high operating temperatures in thermal generators (above the flash point of the oil), some manufacturers require an inert gas as a propellant. The use of compressed air as the propellant in these thermal generators is not recommended because of fire hazard.

Thermal polydisperse generators have an adjustable aerosol output; therefore, calibration is not required. When these units malfunction, there is no aerosol output or the generator spews liquid. If problems occur with the thermal generator, consult the manufacturer.

NOTE 1: Operating temperature and pressure can affect the quality and quantity of the aerosol. The manufacturer may specify operating temperatures based on the liquid used to produce the aerosol. These temperatures can be verified by a front panel display or by using a thermocouple mounted to the heater block that can be monitored by a temperature indicator.

NOTE 2: The aerosol produced by the thermal polydisperse generators should not be confused with the hot-DOP, monodisperse aerosol used in filter efficiency testing.

7 PHOTOMETERS

7.1 Test equipment

7.1.1 100 µg/L aerosol source

A verified source of aerosol with a concentration of 100 µg/L is required to calibrate photometers properly. The output of a single Laskin-nozzle aerosol generator operated at 138 kPa (20 psig) introduced into a controlled airflow of 229.4 m^3/h or 63.7 L/sec (135 ft^3/min) of air will provide a concentration of approximately 100 µg/L (see Figure 3).

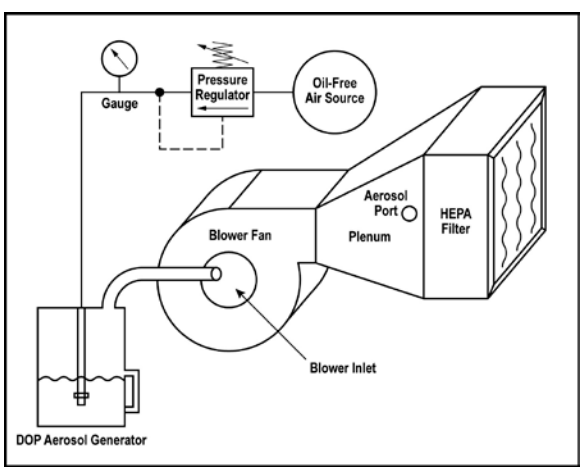

Figure 3—100 µg/L aerosol source.

A controlled airflow source can be constructed using a forward curve fan (i.e., squirrel cage fan), a plenum, and a type A, B, or C HEPA filter as defined in IEST-RP-CC001. The pressure on the Laskin nozzle is adjusted to obtain a concentration of 100 µg/L, which typically is determined gravimetrically (see section 7.2). An aerosol port should be permanently fixed in the system with a connection outside the plenum that accommodates the photometer and a sampling line for gravimetric measurement.

7.1.2 Signal source

To verify the linearity of the photometer amplifier, use a picoampere source for units driven by a current signal or a voltage source for units driven by a voltage signal.

a) Picoampere current source

A signal source that allows adjustment of the amperage over the full range of the source; has a resolution of three significant figures from 10^{-12} A to 1.1×10^{-4} A; and has an accuracy of ±2.0% from 10^{-14} to 10^{-12} A, ±1.6% from 10^{-12} to 10^{-9} A, and ±0.8% from 10^{-9} to 1.1×10^{-4} A.

b) Variable DC voltage source, 0 to 25 VDC (for units driven by a voltage signal)

A signal source with a resolution better than 0.01 V.

7.1.3 Digital voltmeter

The meter should have an accuracy of 1% of reading and be capable of measuring to a resolution of 1 mV.

7.1.4 Electronic balance

An electronic balance with a sensitivity of 0.1 mg.

7.1.5 Glass fiber filter with acrylic binder and encapsulating filter holder

A glass fiber filter with aerosol retention of 99.9% or greater (at 0.3 µm at the airflow velocity for the application) and that will not absorb significant amounts of moisture.

7.1.6 Flowmeter

A dry gas meter or other flowmeter able to measure 42 L/min (1.5 ft^3/min) with a resolution of 2 L/min (0.07 ft^3/min). **NOTE:** The use of a flowmeter in place of the dry gas meter would require a calibrated timer to determine total flow volume.

© IEST 2012 All rights reserved.

Documents Document Sharing Hub
Full document details: IEST RP-CC013.3 2017

7.1.7 Calibrated linear photometer

A calibrated linear photometer should be used as a reference instrument to measure the concentration for various meter readings of the logarithmic photometer.

7.1.8 Providing differing concentrations of aerosol (for logarithmic photometers per section 7.3.4)

A method of diluting a sample taken from a 100 µg/L source or the use of multiple sources of aerosol to obtain aerosol concentrations from 100 µg/L down to concentrations where no reading is obtainable on the logarithmic instrument.

7.2 Test procedures—verification of the 100 µg/L aerosol source

The source is verified by verifying the air velocity according to accepted standards and the aerosol concentration using standard gravimetric procedures.

a) Weigh the filter and place it in the filter holder.

b) Draw a sample of the aerosol through the sample holder at a known flow rate for a specific duration (usually between 25 and 35 L/min [0.88–1.24 ft^3/min] for 10 min).

c) Weigh the filter after sampling.

d) Calculate the aerosol concentration by dividing the sample weight (filter weight after sampling minus the weight before sampling) by the volume sampled (sample flow rate multiplied by time of sampling).

e) Acceptance criteria: The aerosol source can be considered acceptable if its output is 100(±5) µg/L.

f) If the test results are questionable, check the filter media. To verify the media, run a test sample according to the above procedure without introducing the aerosol. The weight change should not be more than 0.2 mg.

EXAMPLE:

1) Assume the flow rate is 30 L/min, and the aerosol is sampled for 10 min.

2) The total volume sampled is:

$$30 \text{ L/min} \times 10 \text{ min} = 300 \text{ L}$$

3) If the sample weighs 0.030 grams, the aerosol concentration is:

$$0.030 \text{ g}/300 \text{ L} = 0.0001 \text{ g/L} = 100 \ \mu\text{g/L}$$

7.3 Test procedures—photometer

7.3.1 Sampling flow rate

a) Connect a dry gas flowmeter to the inlet of the photometer scanning probe.

b) Turn on the photometer to draw air through the photometer scanning probe and flowmeter.

c) Acceptance criteria: The required flow is 28.3(±2.8) L/min (1.00[±0.10] ft^3/min).

d) If the flow is outside of these limits, adjust the flow rate according to the manufacturer instructions.

7.3.2 Linear photometer with analog meter—linearity and accuracy of the amplifier and meter

This procedure applies to photometers with analog meters but not to photometers with digital readouts.

NOTE: This section describes the verification of a photometer in which the amplifier responds to current. Most modern photometers are driven by a current signal from the transducer on the scattering chamber detector. If the amplifier responds to voltage, substitute a DC voltage source for the picoampere source in this section.

a) Disconnect the signal to the photometer amplifier and substitute an appropriate signal from the picoampere source, following the manufacturer instructions.

b) Adjust the output of the picoampere source to drive the photometer indicator to full scale on the 100% range and record the picoampere setting. Record the results of this procedure to the nearest 1/2 increment of the reading under as-found data.

c) Place the decade switch of the picoampere source down one decade. The photometer should read 10.0(±0.5) if the meter is tracking properly.

d) Switch the photometer to the 10% range.

e) Adjust the picoampere source for a full-scale reading and record the picoampere setting under as-found data.

f) Set the decade switch of the picoampere source down one decade. Switch the photometer to the 1% range.

g) Adjust the picoampere source for a full-scale reading and record the picoampere setting.

h) Set the decade switch of the picoampere source down one decade. Switch the photometer to the 0.1% range.

 © IEST 2012 All rights reserved

Documents Document Sharing Hub

Full document details: IEST RP-CC013.3 2017