AMERICAN NATIONAL STANDARD

ANSI/ISA-60079-25 (12.02.05)-2011

Explosive Atmospheres - Part 25: Intrinsically safe electrical systems

Approved 2 December 2011

Documents
Document Sharing Hub

Copyright International Society of Automation
Provided by IHS under license with ISA
No reproduction or networking permitted without license from IHS
Full document details: ISA 12.02.05 2011

Licensee=University of Alberta/5966844001, User=sam, albert
Not for Resale, 05/03/2013 09:35:48 MDT

ANSI/ISA-60079-25 (12.02.05)-2011

Explosive Atmospheres - Part 25: Intrinsically safe electrical systems

ISBN: 978-1-937560-17-1

Copyright © 2011 by ISA, the International Society of Automation. All rights reserved. Not for resale. Printed in the United States of America. No part of this publication may be reproduced, stored in a retrieval system, or transmitted in any form or by any means (electronic mechanical, photocopying, recording, or otherwise), without the prior written permission of the Publisher.

ISA
67 Alexander Drive
P.O. Box 12277
Research Triangle Park, North Carolina 27709
USA

Documents
Document Sharing Hub

Copyright International Society of Automation
Provided by IHS under license with ISA
No reproduction or networking permitted without license from IHS
Full document details: ISA 12.02.05 2011

Licensee=University of Alberta/5966844001, User=sam, albert
Not for Resale, 05/03/2013 09:35:48 MDT

Preface

This preface, as well as all footnotes and annexes, is included for information purposes and is not part of ANSI/ISA-60079-25 (12.02.05)-2011.

This document has been prepared as part of the service of ISA toward a goal of uniformity in the field of instrumentation. To be of real value, this document should not be static but should be subject to periodic review. Toward this end, the Society welcomes all comments and criticisms and asks that they be addressed to the Secretary, Standards and Practices Board; ISA; 67 Alexander Drive; P. O. Box 12277; Research Triangle Park, NC 27709; Telephone (919) 549-8411; Fax (919) 549-8288; E-mail: standards@isa.org.

The ISA Standards and Practices Department is aware of the growing need for attention to the metric system of units in general, and the International System of Units (SI) in particular, in the preparation of instrumentation standards. The Department is further aware of the benefits to USA users of ISA standards of incorporating suitable references to the SI (and the metric system) in their business and professional dealings with other countries. Toward this end, this Department will endeavor to introduce SI-acceptable metric units in all new and revised standards, recommended practices, and technical reports to the greatest extent possible. *Standard for Use of the International System of Units (SI): The Modern Metric System*, published by the American Society for Testing & Materials as IEEE/ASTM SI 10-97, and future revisions, will be the reference guide for definitions, symbols, abbreviations, and conversion factors.

It is the policy of ISA to encourage and welcome the participation of all concerned individuals and interests in the development of ISA standards, recommended practices, and technical reports. Participation in the ISA standards-making process by an individual in no way constitutes endorsement by the employer of that individual, of ISA, or of any of the standards, recommended practices, and technical reports that ISA develops.

CAUTION — ISA DOES NOT TAKE ANY POSITION WITH RESPECT TO THE EXISTENCE OR VALIDITY OF ANY PATENT RIGHTS ASSERTED IN CONNECTION WITH THIS DOCUMENT, AND ISA DISCLAIMS LIABILITY FOR THE INFRINGEMENT OF ANY PATENT RESULTING FROM THE USE OF THIS DOCUMENT. USERS ARE ADVISED THAT DETERMINATION OF THE VALIDITY OF ANY PATENT RIGHTS, AND THE RISK OF INFRINGEMENT OF SUCH RIGHTS, IS ENTIRELY THEIR OWN RESPONSIBILITY.

PURSUANT TO ISA'S PATENT POLICY, ONE OR MORE PATENT HOLDERS OR PATENT APPLICANTS MAY HAVE DISCLOSED PATENTS THAT COULD BE INFRINGED BY USE OF THIS DOCUMENT AND EXECUTED A LETTER OF ASSURANCE COMMITTING TO THE GRANTING OF A LICENSE ON A WORLDWIDE, NON-DISCRIMINATORY BASIS, WITH A FAIR AND REASONABLE ROYALTY RATE AND FAIR AND REASONABLE TERMS AND CONDITIONS. FOR MORE INFORMATION ON SUCH DISCLOSURES AND LETTERS OF ASSURANCE, CONTACT ISA OR VISIT WWW.ISA.ORG/STANDARDSPATENTS.

OTHER PATENTS OR PATENT CLAIMS MAY EXIST FOR WHICH A DISCLOSURE OR LETTER OF ASSURANCE HAS NOT BEEN RECEIVED. ISA IS NOT RESPONSIBLE FOR IDENTIFYING PATENTS OR PATENT APPLICATIONS FOR WHICH A LICENSE MAY BE REQUIRED, FOR CONDUCTING INQUIRIES INTO THE LEGAL VALIDITY OR SCOPE OF PATENTS, OR DETERMINING WHETHER ANY LICENSING TERMS OR CONDITIONS PROVIDED IN CONNECTION WITH SUBMISSION OF A LETTER OF ASSURANCE, IF ANY, OR IN ANY LICENSING AGREEMENTS ARE REASONABLE OR NON-DISCRIMINATORY.

ISA REQUESTS THAT ANYONE REVIEWING THIS DOCUMENT WHO IS AWARE OF ANY PATENTS THAT MAY IMPACT IMPLEMENTATION OF THE DOCUMENT NOTIFY THE ISA STANDARDS AND PRACTICES DEPARTMENT OF THE PATENT AND ITS OWNER.

Documents
Document Sharing Hub

Copyright International Society of Automation
Provided by IHS under license with ISA
No reproduction or networking permitted without license from IHS
Full document details: ISA 12.02.05 2011

Licensee=University of Alberta/5966844001, User=sam, albert
Not for Resale, 05/03/2013 09:35:48 MDT

ADDITIONALLY, THE USE OF THIS DOCUMENT MAY INVOLVE HAZARDOUS MATERIALS, OPERATIONS OR EQUIPMENT. THE DOCUMENT CANNOT ANTICIPATE ALL POSSIBLE APPLICATIONS OR ADDRESS ALL POSSIBLE SAFETY ISSUES ASSOCIATED WITH USE IN HAZARDOUS CONDITIONS. THE USER OF THIS DOCUMENT MUST EXERCISE SOUND PROFESSIONAL JUDGMENT CONCERNING ITS USE AND APPLICABILITY UNDER THE USER'S PARTICULAR CIRCUMSTANCES. THE USER MUST ALSO CONSIDER THE APPLICABILITY OF ANY GOVERNMENTAL REGULATORY LIMITATIONS AND ESTABLISHED SAFETY AND HEALTH PRACTICES BEFORE IMPLEMENTING THIS DOCUMENT.

THE USER OF THIS DOCUMENT SHOULD BE AWARE THAT THIS DOCUMENT MAY BE IMPACTED BY ELECTRONIC SECURITY ISSUES. THE COMMITTEE HAS NOT YET ADDRESSED THE POTENTIAL ISSUES IN THIS VERSION.

The following people served as members of ISA Subcommittee ISA12.2:

NAME	COMPANY
N. Ludlam, Chair	FM Approvals Ltd.
M. Coppler, Managing Director	Ametek Inc.
N. Abbatiello	Speer Equipment Inc.
T. Adam	FM Approvals LLC
R. Allen	Honeywell Inc.
S. Arnold	Ametek Drexelbrook
S. Czaniecki	Endress + Hauser Canada
J. Dolphin	PSC Solutions
A. Engler	Det Norske Veritas DNV
J. Genre	Industrial Scientific Corp.
G. Kozinski	GE Infrastructure Sensing
R. Masek	CSA International
J. McCormick	Bently Nevada LLC
J. Miller	Detector Electronics Corp.
A. Page	Consultant
R. Parks	Intertek
B. Schaefer	Underwriters Laboratories Inc.
T. Schnaare	Rosemount Inc.
J. Thomas	Schlumberger
L. Vlagea	General Monitors
D. Wechsler	Dow Chemical Co.

The following people served as members of ISA Committee ISA12:

T. Schnaare, Chair	Rosemount Inc.
W. Lawrence, Vice Chair	FM Approvals LLC
M. Coppler, Managing Director	Ametek Inc.
R. Allen	Honeywell Inc.
D. Ankele	Underwriters Laboratories Inc.
R. Batra	Chevron Corporation
S. Bihler	Zone Safe Solutions
K. Boegli	Phoenix Contact
D. Burns	Shell P&T – Innovation / R&D
C. Casso	Nabors Industries
M. Dona	Santos Ltd.
T. Dubaniewicz	NIOSH
D. El Tawy	Solar Turbines, Inc.
A. Engler	Det Norske Veritas DNV

Documents
Document Sharing Hub

Copyright International Society of Automation
Provided by IHS under license with ISA
No reproduction or networking permitted without license from IHS
Full document details: ISA 12.02.05 2011

Licensee=University of Alberta/5966844001, User=sam, albert
Not for Resale, 05/03/2013 09:35:48 MDT

W. Fiske	Intertek
D. Jagger	Bifold-Fluid Power
J. Jonscher	Adalet PLM
P. Kovscek	Industrial Scientific Corporation
J. Kuczka	Killark
E. Leubner	Cooper Crouse-Hinds
N. Ludlam	FM Approvals Ltd.
R. Masek	CSA International
E. Massey	Baldor Electric Company
J. Miller	Detector Electronics Corporation
A. Page	Consultant
R. Seitz	Artech Engineering
R. Sierra	USCG
M. Spencer	Columbia Gas Transmission
J. Thomas	Schlumberger
D. Wechsler	Dow Chemical Company
R. Wigg	E-x Solutions International Pty. Ltd.

This standard was approved for publication by the ISA Standards and Practices Board on 23 November 2011.

NAME	COMPANY
D. Dunn, Vice President	Aramco Services Co.
D. Bartusiak	ExxonMobil Research & Engineering
P. Brett	Honeywell Inc.
J. Campbell	ConocoPhillips
M. Coppler	Ametek Inc.
E. Cosman	The Dow Chemical Company
B. Dumortier	Schneider Electric
J. Federlein	Federlein & Assoc. Inc.
J. Gilsinn	NIST/EL
E. Icayan	ACES Inc.
J. Jamison	EnCana Corporation Ltd.
K. P. Lindner	Endress + Hauser Process Solutions AG
V. Maggioli	Feltronics Corp.
T. McAvinew	Instrumentation and Control Engineering, LLC
R. Reimer	Rockwell Automation
S. Russell	Valero Energy Corp.
N. Sands	DuPont
H. Sasajima	Yamatake Corp.
T. Schnaare	Rosemount Inc.
J. Tatera	Tatera & Associates Inc.
I. Verhappen	Industrial Automation Networks Inc.
W. Weidman	WCW Consulting
J. Weiss	Applied Control Solutions LLC
M. Wilkins	Yokogawa IA Global Marketing (USMK)
D. Zetterberg	Chevron Energy Technology Co.

Documents
Document Sharing Hub

Copyright International Society of Automation
Provided by IHS under license with ISA
No reproduction or networking permitted without license from IHS
Full document details: ISA 12.02.05 2011

Licensee=University of Alberta/5966844001, User=sam, albert
Not for Resale, 05/03/2013 09:35:48 MDT

This page intentionally left blank.

Documents
Document Sharing Hub

Copyright International Society of Automation
Provided by IHS under license with ISA
No reproduction or networking permitted without license from IHS
Full document details: ISA 12.02.05 2011

Licensee=University of Alberta/5966844001, User=sam, albert
Not for Resale, 05/03/2013 09:35:48 MDT

CONTENTS

1 Scope 11
2 ~~Normative~~ References 11
3 Terms, definitions and abbreviations 12
3.1 Terms and definitions 12
3.2 Abbreviations 13
4 Descriptive system document 13
5 Grouping and classification 14
6 Levels of protection 14
6.1 General 14
6.2 Level of protection “ia” 14
6.3 Level of protection “ib” 14
6.4 Level of protection “ic” 15
7 Ambient temperature rating 15
8 Interconnecting wiring / cables used in an intrinsically safe electrical system 15
9 Requirements of cables and ~~multi-core~~ multi-conductor cables 15
9.1 General 15
9.2 ~~Multi-core~~ Multi-conductor cables 16
9.3 Electrical parameters of cables 16
9.4 Conducting screens (shields) 16
9.5 Types of ~~multi-core~~ multi-conductor cables 16
9.5.1 General 16
9.5.2 Type A cable 16
9.5.3 Type B cable 16
9.5.4 Type C cable 17
10 Termination of intrinsically safe circuits 17
11 Earthing and bonding of intrinsically safe systems 17
12 Protection against lightning and other electrical surges 17
13 Assessment of an intrinsically safe system 18
13.1 General 18
13.2 Simple apparatus 19
13.3 Analysis of inductive circuits 20
13.4 Faults in ~~multi-core~~ multi-conductor cables 20
13.4.1 Type of ~~multi-core~~ multi-conductor cables 20
13.4.2 Type A cable 20
13.4.3 Type B cable 20
13.4.4 Type C cable 21
13.5 Type verifications and type tests 21
14 Marking 21
15 Predefined systems 21
Annex A (informative) Assessment of a simple intrinsically safe system 23
Annex B (normative) Assessment of circuits with more than one source of power 27

Documents
Document Sharing Hub

Copyright International Society of Automation
Provided by IHS under license with ISA
No reproduction or networking permitted without license from IHS
Full document details: ISA 12.02.05 2011

Licensee=University of Alberta/5966844001, User=sam, albert
Not for Resale, 05/03/2013 09:35:48 MDT

Annex C (informative) Interconnection of non-linear and linear intrinsically safe circuits 31
Annex D (normative) Verification of inductive parameters 69
Annex E (informative) A possible format for descriptive systems drawings and installation drawings 71
Annex F (informative) Surge protection of an intrinsically safe circuit 75
Annex G (normative) Testing of cable electrical parameters 79
Annex H (informative) Use of simple apparatus in systems 81
Annex I (normative) FISCO systems 83
Annex J (normative) US National Deviations 87
Bibliography 89

Figure 1 – Systems analysis 19
Figure 2 – Typical system using simple apparatus 20
Figure B.1 – Sources of power connected in series 28
Figure B.2 – Sources of power connected in parallel 29
Figure B.3 – Sources of power not deliberately connected 29
Figure C.1 – Equivalent circuit and output characteristic of resistive circuits 32
Figure C.2 – Current and/or voltage addition for interconnections 35
Figure C.3 – Output characteristic and equivalent circuit of a source with trapezoidal characteristic 38
Figure C.4 – Example of an interconnection 42
Figure C.5 – Sum characteristics for the circuit as given in Figure C.4 44
Figure C.6 – Current and/or voltage addition for the example given in Figure C.4 46
Figure C.7 – Limit curve diagram for universal source characteristic – Group IIC 56
Figure C.8 – Limit curve diagram for universal source characteristic – Group IIB 66
Figure C.9 – Copy pattern for universal source diagrams 67
Figure D.1 – Typical inductive circuit 70
Figure E.1 – Typical block diagram for IS system descriptive system document 72
Figure E.2 – Typical installation drawing for IS system 73
Figure F.1 – Surge protection requirements of an instrument loop 77
Figure I.1 – Typical system 85

Table A.1 – Simple system analysis 25
Table C.1 – Parameters necessary to describe the output characteristic 37
Table C.2 – Assignment of diagrams to equipment groups and inductances 40

Documents
Document Sharing Hub

Copyright International Society of Automation
Provided by IHS under license with ISA
No reproduction or networking permitted without license from IHS
Full document details: ISA 12.02.05 2011

Licensee=University of Alberta/5966844001, User=sam, albert
Not for Resale, 05/03/2013 09:35:48 MDT

Foreword (ISA)

All text of IEC 60079-25:2010 (Edition 2) is included. U.S. National Deviations are shown by strikeout through text deleted and underline under text added. Tables, or portions of tables, that are to be deleted are shown as shaded; figures to be deleted are marked with the overlay "X." There are ten annexes in this standard. Annexes B, D, G and I are normative and are considered part of this standard. Annexes A, B, E, F, H and J are informative and are not considered part of this standard.

Documents
Document Sharing Hub

Copyright International Society of Automation
Provided by IHS under license with ISA
No reproduction or networking permitted without license from IHS
Full document details: ISA 12.02.05 2011

Licensee=University of Alberta/5966844001, User=sam, albert
Not for Resale, 05/03/2013 09:35:48 MDT

This page intentionally left blank.

--`,```,``,`,,``,,,,``,,,,,``,`-`-`,,`,,`,`,,`---

Documents
Document Sharing Hub

Copyright International Society of Automation
Provided by IHS under license with ISA
No reproduction or networking permitted without license from IHS
Full document details: ISA 12.02.05 2011

Licensee=University of Alberta/5966844001, User=sam, albert
Not for Resale, 05/03/2013 09:35:48 MDT

1 Scope

This ~~part of IEC 60079~~ standard contains the specific requirements for construction and assessment of intrinsically safe electrical systems, type of protection “i”, intended for use, as a whole or in part, in Class I, Zone 0, 1, or 2, or Zone 20, 21, or 22 hazardous (classified) locations as defined by the National Electrical Code® (NEC), ANSI/NFPA 70® ~~in locations in which the use of Group I, II or III apparatus is required~~.

NOTE 1 This standard is intended for use by the designer of the system who may be a manufacturer, a specialist consultant or a member of the end-user’s staff.

This standard supplements and modifies the general requirements of ANSI/ISA-60079-0 and ANSI/ISA-61241-0 ~~IEC 60079-0~~ and the intrinsic safety standard ANSI/ISA-60079-11 and ANSI/ISA-61241-11 ~~IEC 60079-11~~. Where a requirement of this standard conflicts with a requirement of ANSI/ISA-60079-0, ANSI/ISA-60079-11, ANSI/ISA-61241-0~~IEC 60079-0~~ or ANSI/ISA-61241-11 ~~IEC 60079-11~~, the requirement of this standard takes precedence.

~~This standard supplements IEC 60079-11, the requirements of which apply to electrical apparatus used in intrinsically safe electrical systems.~~

The installation requirements of Group II or Group III systems designed in accordance with this standard are specified in the National Electrical Code ANSI/NFPA 70 ~~IEC 60079-14~~.

~~NOTE 2 Group I installation requirements are presently not provided in IEC 60079-14.~~

2 ~~Normative~~ References

The following referenced documents are indispensable for the application of this document. For dated references, only the edition cited applies. For undated references, the latest edition of the referenced document (including any amendments) applies.

IEC 60060-1, *High-voltage test techniques – Part 1: General definitions and test requirements*

~~IEC 60079-0, *Explosive atmospheres – Part 0: Equipment – General requirements*~~

ANSI/ISA-60079-0 (12.00.01)-2009, Explosive atmospheres – Part 0: Equipment – General Requirements

~~IEC 60079-11:2006, *Explosive atmospheres – Part 11: Equipment protection by intrinsic safety “i”*~~

ANSI/ISA-60079-11 (12.02.01), Explosive Atmospheres – Part 11: Equipment protection by intrinsic safety “i”

~~IEC 60079-14:2007, *Explosive atmospheres – Part 14: Electrical installations design, selection and erection*~~

~~IEC 60079-15, *Electrical apparatus for explosive gas atmospheres – Part 15: Construction, test and marking of type of protection "n" electrical apparatus*~~

ANSI/ISA-60079-15 (12.12.02)-2009 Electrical Apparatus for Use in Class I, Zone 2 Hazardous (Classified) Locations: Type of Protection "n"

~~IEC 60079-27:2008, *Explosive atmospheres – Part 27: Fieldbus intrinsically safe concept (FISCO)*~~

ANSI/ISA-60079-27 (12.02.04)-2006, *Fieldbus Intrinsically Safe Concept (FISCO) and Fieldbus Non-Incendive Concept (FNICO)*

Documents
Document Sharing Hub
Copyright International Society of Automation
Provided by IHS under license with ISA
No reproduction or networking permitted without license from IHS
Full document details: ISA 12.02.05 2011
Licensee=University of Alberta/5966844001, User=sam, albert
Not for Resale, 05/03/2013 09:35:48 MDT

IEC 61158-2, *Industrial communication networks – Fieldbus specifications – Part 2: Physical layer specification and service definition*

~~IEC 61241-0, *Electrical apparatus for use in the presence of combustible dust – Part 0: General requirements*~~

ANSI/ISA-61241-0(12.10.02), Electrical Apparatus for Use in Zone 20, Zone 21 and Zone 22 Hazardous (Classified) Locations − General Requirements

~~IEC 61241-11, *Electrical apparatus for use in the presence of combustible dust – Part 11: Protection by intrinsic safety 'iD'*~~

ANSI/ISA-61241-11(12.10.04), Electrical Apparatus for Use in Zone 20, 21, and Zone 22 Hazardous (Classified) Locations — Protection by Intrinsic Safety "iD"

ANSI/NFPA 70:2011, National Electrical Code

3 Terms, definitions and abbreviations

3.1 Terms and definitions

For the purposes of this document, the following terms and definitions, specific to intrinsically safe electrical systems, apply. They supplement the terms and definitions which are given in ANSI/ISA-60079-0, ANSI/ISA-60079-11, ANSI/ISA-61241-0 ~~IEC 60079-0~~ and ANSI/ISA-61241-11 ~~IEC 60079-11~~.

3.1.1
intrinsically safe electrical system
assembly of interconnected items of electrical apparatus, described in a descriptive system document, in which the circuits or parts of circuits, intended to be used in an explosive atmosphere, are intrinsically safe circuits

3.1.2
~~listed certified~~ listed intrinsically safe electrical system
intrinsically safe electrical system ~~conforming to 3.1.1~~ listed against ~~for which a certificate has been issued~~ ~~confirming that the electrical system complies with~~ ANSI/ISA-60079-25 ~~IEC 60079-25~~

3.1.3
~~**uncertified intrinsically safe electrical system**~~
~~intrinsically safe electrical system conforming to 3.1.1 for which the knowledge of the electrical parameters of the items of certified intrinsically safe electrical apparatus, certified associated apparatus, simple apparatus and the knowledge of the electrical and physical parameters of the interconnecting wiring permit the unambiguous deduction that intrinsic safety is preserved~~

3.1.4
descriptive system document
document in which the items of electrical apparatus, their electrical parameters and those of the interconnecting wiring are specified

3.1.5
system designer
person who is responsible for the descriptive system document, has the necessary competence to fulfil the task and who is empowered to enter into the commitments on behalf of his employer

Documents
Document Sharing Hub

Copyright International Society of Automation
Provided by IHS under license with ISA
No reproduction or networking permitted without license from IHS
Full document details: ISA 12.02.05 2011

Licensee=University of Alberta/5966844001, User=sam, albert
Not for Resale, 05/03/2013 09:35:48 MDT

3.1.6
maximum cable capacitance
C_c
maximum capacitance of the interconnecting cable that can be connected into an intrinsically safe circuit without invalidating intrinsic safety

3.1.7
maximum cable inductance
L_c
maximum inductance of the interconnecting cable that can be connected into an intrinsically safe circuit without invalidating intrinsic safety

3.1.8
maximum cable inductance to resistance ratio
L_c/R_c
maximum value of the ratio inductance (L_c) to resistance (R_c) of the interconnecting cable that can be connected into an intrinsically safe circuit without invalidating intrinsic safety

3.1.9
linear power supply
power source from which the available output current is determined by a resistor; the output voltage decreases linearly as the output current increases.

3.1.10
non-linear power supply
power supply where the output voltage and output current have a non-linear relationship

NOTE For example, a supply with a constant voltage output that can reach a constant current limit controlled by semiconductors.

3.2 Abbreviations

FISCO Fieldbus Intrinsically Safe Concept
FNICO Fieldbus Non-Incendive Concept

4 Descriptive system document

A descriptive system document shall be created for all systems. The descriptive system document shall provide an adequate analysis of the safety achieved by the system.

NOTE Annex E comprises examples of typical diagrams, which illustrate the requirements of the descriptive system document.

The minimum requirements are as follows:

a) block diagram of the system listing all the items of apparatus within the system including simple apparatus and the interconnecting wiring. An example of such a diagram is shown in Figure E.1;

b) a statement of the group subdivision (for Groups II and III), the level of protection for each part of the system, the temperature classification, and the ambient temperature rating in accordance with Clauses 5, 6 and 7;

c) the requirements and permitted parameters of the interconnecting wiring in accordance with Clause 8;

d) details of the earthing and bonding points of the systems in accordance with Clause 11. When surge protection devices are used, an analysis in accordance with Clause 12 shall also be included;

Documents
Document Sharing Hub
Copyright International Society of Automation
Provided by IHS under license with ISA
No reproduction or networking permitted without license from IHS
Full document details: ISA 12.02.05 2011
Licensee=University of Alberta/5966844001, User=sam, albert
Not for Resale, 05/03/2013 09:35:48 MDT

e) where applicable, the justification of the assessment of apparatus as simple apparatus in accordance with ANSI/ISA-60079-11 ~~IEC 60079-11~~ shall be included;

f) where the intrinsically safe circuit contains several pieces of intrinsically safe apparatus the analysis of the summation of their parameters shall be available. This shall include all simple apparatus and listed ~~certified~~ intrinsically safe apparatus;

g) a unique identification of the descriptive system document shall be created;

h) the system designer shall sign and date the document.

NOTE The descriptive systems drawing is not the same as the Control Drawing referred to in ANSI/ISA-60079-11 or ANSI/ISA-61241-11~~IEC 60079-11~~.

5 Grouping and classification

Intrinsically safe electrical systems shall be placed in a ~~Group I,~~ Group II or Group III as defined in ANSI/ISA-60079-0 ~~IEC 60079-0~~. Groups II and III intrinsically safe electrical systems as a whole or parts thereof shall be given a further subdivision of the Group as appropriate.

Apparatus within Groups II and III intrinsically safe electrical system, intended for use in explosive gas or dust atmospheres, shall be given a temperature class or maximum surface temperature in accordance with ANSI/ISA-60079-0 ~~IEC 60079-0~~, ANSI/ISA-60079-11 ~~IEC 60079-11~~, ANSI/ISA-61214-0, ~~IEC 61241-0~~ and ANSI/ISA-61241-11 ~~IEC 61241-11~~ as applicable.

NOTE 1 In Group II and Group III intrinsically safe electrical systems, or parts thereof, the subdivisions A, B, C may be different from those of the particular intrinsically safe electrical apparatus and associated electrical apparatus included in the system.

NOTE 2 Different parts of the same intrinsically safe electrical system may have different subdivisions (A, B, C). The apparatus used may have different temperature classes and different ambient temperature ratings.

6 Levels of protection

6.1 General

Each part of an intrinsically safe electrical system intended for use in an explosive atmosphere will have a level of protection of “ia”, “ib” or “ic” in accordance with ANSI/ISA-60079-11 or ANSI/ISA-61241-11 ~~IEC 60079-11~~. The complete system need not necessarily have a single level of protection.

NOTE 1 For example, where an instrument is primarily an “ib” instrument but which is designed for the connection of an “ia” sensor, such as a pH measuring instrument with its connected probe, the part of the system up to the instrument is “ib” and the sensor and its connections “ia”.

NOTE 2 An “ia” field instrument powered via an “ib” associated apparatus would be considered as an “ib” system.

NOTE 3 A system may be “ib” in normal operation with external power, but when power is removed under defined ~~safety~~ circumstances (ventilation failure) then the system could become “ia” under back up battery power. The level of protection will be clearly defined for foreseeable circumstances.

Clause 13 contains details of the required assessment.

6.2 Level of protection “ia”

Where the requirements applicable to electrical apparatus of level of protection “ia” (see ANSI/ISA-60079-11 and ANSI/ISA-61241-11 ~~IEC 60079-11~~) are satisfied by an intrinsically safe system or part of a system considered as an entity, then that system or part of a system shall be placed in level of protection “ia”.

6.3 Level of protection “ib”

Where the requirements applicable to electrical apparatus of level of protection “ib” (see ANSI/ISA-60079-11 and ANSI/ISA-61241-11 ~~IEC 60079-11~~) are satisfied by an intrinsically safe system or part of a system considered as an entity, then that system or part of a system shall be placed in level of protection “ib”.

Documents
Document Sharing Hub
Copyright International Society of Automation
Provided by IHS under license with ISA
No reproduction or networking permitted without license from IHS
Full document details: ISA 12.02.05 2011
Licensee=University of Alberta/5966844001, User=sam, albert
Not for Resale, 05/03/2013 09:35:48 MDT

6.4 Level of protection "ic"

Where the requirements applicable to electrical apparatus level of protection "ic" (see ANSI/ISA-60079-11~~IEC 60079-11~~) are satisfied by an intrinsically safe system or part of a system considered as an entity, then the system or part of a system shall be placed in level of protection "ic".

7 Ambient temperature rating

Where part or all the intrinsically safe system is specified as being suitable for operation outside the normal operating temperature range of –20 °C and +40 °C, this shall be specified in the descriptive system document.

8 Interconnecting wiring / cables used in an intrinsically safe electrical system

The electrical parameters of the interconnecting wiring upon which intrinsic safety depends and the derivation of these parameters shall be specified in the descriptive system document. Alternatively, a specific type of cable shall be specified and the justification for its use included in the documentation. Cables for the interconnecting wiring shall comply with the relevant requirements of Clause 9.

NOTE: The requirements for intrinsically safe wiring are contained within the National Electrical Code® (NEC) 504.10.

Where relevant, the descriptive system document shall also specify the permissible types of ~~multi-core~~ multi-conductor cables as specified in Clause 9, which each particular circuit may utilize. In the particular case where faults between separate circuits have not been taken into account, then a note shall be included on the block diagram of the descriptive system document stating the following: "where the interconnecting cable utilizes part of a ~~multi-core~~ multi-conductor cable containing other intrinsically safe circuits, then the ~~multi-core~~ multi-conductor cable shall be in accordance with the requirements of a ~~multi-core~~ multi-conductor cable type A or B, as specified in Clause 9 of ANSI/ISA-60079-25 ~~IEC 60079-25~~".

A ~~multi-core~~ multi-conductor cable containing circuits classified as level of protection "ia", "ib" or "ic" shall not contain non-intrinsically safe circuits.

"ic" ~~multi-core~~ multi-conductor cables may contain more than one intrinsically safe "ia", "ib" or "ic" circuit subject to the applicable faults specified in Clause 13.

NOTE ~~Multi-core~~ Multi-conductor cables not complying with type A or B are permitted if the specific combination of circuits is examined against the requirements of ANSI/ISA-60079-11 or ANSI/ISA-61241-11 ~~IEC 60079-11~~.

Intrinsically safe "ic" circuits shall only be run together with intrinsically safe "ia" and "ib" circuits provided they are run in a ~~multi-core~~ multi-conductor cable of type A or type B specified in 9.5.

9 Requirements of cables and ~~multi-core~~ multi-conductor cables

9.1 General

The diameter of individual conductors or strands of multi-stranded conductors within the hazardous area shall not be less than 0,1 mm. This information shall be added to the Descriptive System Document.

Only insulated cables with insulation capable of withstanding a dielectric test of at least 500 V a.c. or 750 V d.c. shall be used in intrinsically safe circuits.

NOTE This clause is not intended to prevent the use of bare conductors in a signalling system and these should be considered as simple apparatus and not interconnecting wiring.

Documents
Document Sharing Hub

Copyright International Society of Automation
Provided by IHS under license with ISA
No reproduction or networking permitted without license from IHS
Full document details: ISA 12.02.05 2011

Licensee=University of Alberta/5966844001, User=sam, albert
Not for Resale, 05/03/2013 09:35:48 MDT

9.2 ~~Multi-core~~ Multi-conductor cables

The radial thickness of the insulation of each conductor ~~core~~ shall be appropriate to the conductor diameter and the nature of the insulation with a minimum of ~~0,2~~ 0.25 mm.

~~Multi-core~~ Multi-conductor cables shall be capable of withstanding a dielectric test of at least:

a) 500 V r.m.s. a.c. or 750 V d.c. applied between any armouring and/or screen(s) joined together and all the conductors ~~cores~~ joined together.

b) 1 000 V r.m.s. a.c. or 1 500 V d.c. applied between a bundle comprising one half of the cable cores joined together and a bundle comprising the other half of the conductors ~~cores~~ joined together. This test is not applicable to ~~multi-core~~ multi-conductor cables with conducting screens for individual circuits.

The dielectric strength test shall be carried out in accordance with an appropriate cable standard or dielectric strength tests of ANSI/ISA-60079-11 or ANSI/ISA-61241-11 ~~IEC 60079-11~~.

9.3 Electrical parameters of cables

The electrical parameters (C_c and L_c or C_c and L_c/R_c) for all cables used within an intrinsically safe system shall be determined according to a), b) or c):

a) the most onerous electrical parameters provided by the cable manufacturer;

b) electrical parameters determined by measurement of a sample, with the method of testing electrical parameters of cables given in Annex G;

c) where the interconnection comprises two or three cores of a conventionally constructed cable (with or without screen): 200 pF/m and either 1 μH/m or an inductance to resistance ratio (L_c/R_c) calculated by dividing 1 μH by the manufacturers specified loop resistance per meter. Alternatively, for currents up to I_o = 3 A an L/R ratio of 30 μH/Ω may be used.

Where a FISCO or FNICO system is used, the requirements for the cable parameters shall comply with Annex I.

9.4 Conducting screens (shields)

Where conducting screens provide protection for separate intrinsically safe circuits in order to prevent such circuits becoming connected to one another, the coverage of those screens shall be at least 60 % of the surface area.

9.5 Types of ~~multi-core~~ multi-conductor cables

9.5.1 General

~~Multi-core~~ Multi-conductor cables shall be classified as either type A, type B or type C for the purposes of applying faults and assessing ~~the safety of~~ the cabling within an intrinsically safe system. The cable types are specified in 9.5.2, 9.5.3, and 9.5.4.

The use of ~~multi-core~~ multi-conductor cables that do not comply with the requirements for types A, B, or C is not permitted.

9.5.2 Type A cable

A cable whose construction complies with 9.1, 9.2, 9.3 and has conducting screens providing individual protection for each intrinsically safe circuit according to 9.4.

9.5.3 Type B cable

A cable whose construction complies with 9.1, 9.2 and 9.3, is fixed and effectively protected against damage and does not contain any circuit with a maximum voltage U_o exceeding 60 V.

Documents
Document Sharing Hub

Copyright International Society of Automation
Provided by IHS under license with ISA
No reproduction or networking permitted without license from IHS
Full document details: ISA 12.02.05 2011

Licensee=University of Alberta/5966844001, User=sam, albert
Not for Resale, 05/03/2013 09:35:48 MDT

9.5.4 Type C cable

A cable whose construction complies with 9.1, 9.2 and 9.3.

10 Termination of intrinsically safe circuits

Intrinsically safe systems that contain junction boxes or marshalling cubicles where intrinsically safe circuits are terminated shall comply with the terminal requirements in the facilities for the connection of external circuits of ANSI/ISA-60079-11 or ANSI/ISA-61241-11 as appropriate ~~IEC 60079-11~~.

11 Earthing and bonding of intrinsically safe systems

In general, an intrinsically safe circuit shall either be fully floating or bonded to the reference potential associated with a hazardous area at one point only. The level of isolation required (except at that one point) is to be designed to withstand a 500 V insulation test in accordance with the dielectric strength requirement of ANSI/ISA-60079-11 or ANSI/ISA-61241-11 ~~IEC 60079-11~~. Where this requirement is not met, the circuit shall be considered to be earthed at that point. More than one earth connection is permitted on a circuit, provided that the circuit is galvanically separated into sub-circuits, each of which has only one connection to the grounding electrode system ~~earth point~~.

Screens shall be connected to earth or the structure in accordance with the National Electrical Code ANSI/NFPA 70 ~~IEC 60079-14~~. Where a system is intended for use in an installation where significant potential differences (greater than 10 V) between the structure and the circuit can occur, the preferred technique is to use a circuit galvanically isolated from external influences such as changes in ground potential at some distance from the structure. Particular care is required where part of the system is intended to be used in Class I Zone 0 or Zone 20 locations ~~or when the system has a very high level of protection so as to conform to EPL Ma requirements~~.

The descriptive system document should clearly indicate which point or points of the system are intended to be connected to the plant reference potential and any special requirements of such a bond. This may be achieved by adding a reference to National Electrical Code ANSI/NFPA 70 ~~IEC 60079-14~~ in the descriptive system document.

~~NOTE IEC 60079-14 does not apply to electrical installations in mines susceptible to firedamp.~~

12 Protection against lightning and other electrical surges

Where a risk analysis shows that an installation is particularly susceptible to lightning or other surges, precautions shall be taken to avoid the possible hazards.

If part of an intrinsically safe circuit is installed in Zone 0 in such a way that there is a risk of developing hazardous or damaging potential differences within Zone 0, a surge protection device shall be installed. Surge protection is required between each conductor of the cable including the screen and the structure where the conductor is not already bonded to the structure. The surge protection device shall be installed outside but as near to the boundary of Zone 0 as is practicable, preferably within 1 m.

Surge protection for apparatus in Class I, Zones 1 and 2 shall be included in the system design for highly susceptible locations.

The surge protection device shall be capable of diverting a minimum peak discharge current of 10 kA (8/20 μs impulse according to IEC 60060-1 for 10 operations). The connection between the protection device and the local structure shall have a minimum cross-sectional area equivalent to 4 mm^2 copper. The cable between the intrinsically safe apparatus in Zone 0 and the surge protection device shall be installed in such a way that it is protected from lightning. Any

--`,``,````,`,`,,`,,,,``,,,,,``,`-`-`,,`,,`,`,,`---

Documents
Document Sharing Hub

Copyright International Society of Automation
Provided by IHS under license with ISA
No reproduction or networking permitted without license from IHS
Full document details: ISA 12.02.05 2011

Licensee=University of Alberta/5966844001, User=sam, albert
Not for Resale, 05/03/2013 09:35:48 MDT

surge protection device introduced into an intrinsically safe circuit shall be suitably explosion protected for its intended location and comply with the applicable ordinary location standard.

The use of surge protection devices which interconnect the circuit and the structure via non-linear devices such as gas discharge tubes and semiconductors is not considered to adversely affect the intrinsic safety of a circuit, provided that in normal operation the current through the device is less than 10 μA.

NOTE If insulation testing at 500 V is carried out under well-controlled conditions, then it may be necessary to disconnect the surge suppression devices to prevent them invalidating the measurement.

Intrinsically safe systems utilizing surge suppression techniques shall be supported by a ~~an adequately~~ documented analysis of the effect of indirect multiple earthing, taking into account the criteria set out above. The capacitance and inductance of the surge suppression devices shall be considered in the assessment of the intrinsically safe system.

Annex F illustrates some aspects of the design of surge protection of an intrinsically safe system.

13 Assessment of an intrinsically safe system

13.1 General

Where a system contains apparatus which does not separately conform to ANSI/ISA-60079-11 or ANSI/ISA-61241-11 ~~IEC 60079-11~~, then that system shall be analysed as a whole, as if it were an apparatus. A level of protection “ia” system shall be analysed in accordance with the level of protection “ia” criteria of ANSI/ISA-60079-11 or ANSI/ISA-61241-11 ~~IEC 60079-11~~. A level of protection “ib” system shall be analysed in accordance with the level of protection “ib” criteria of ANSI/ISA-60079-11 or ANSI/ISA-61241-11 ~~IEC 60079-11~~. A level of protection “ic” system shall be analysed in accordance with the level of protection “ic” criteria of ANSI/ISA-60079-11 or ANSI/ISA-61241-11 ~~IEC 60079-11~~. In addition to the faults within the apparatus, the failures within the field wiring listed in 13.4 shall also be taken into account.

~~NOTE It is recognized that applying faults to the system as a whole is less stringent than applying faults to each piece of apparatus; nevertheless, this is considered to achieve an acceptable level of safety.~~

Where all the necessary information is available, it is permissible to apply the fault count to the system as a whole even when apparatus conforming to ANSI/ISA-60079-11 or ANSI/ISA-61241-11 ~~IEC 60079-11~~ is being used. This is an alternative solution to the more usual straightforward comparison of input and output characteristics of the separately analysed or tested apparatus. Where a system contains only separately analysed or tested apparatus conforming to ANSI/ISA-60079-11 or ANSI/ISA-61241-11 ~~IEC 60079-11~~, the compatibility of all the apparatus included in the system shall be demonstrated. Faults within the apparatus have already been considered and no further consideration of these faults is necessary. Where a system contains a single source of power, the output parameters of the power source take into account opening, shorting and earthing of the external interconnecting cable, and consequently these failures do not need to be further considered. Annex A contains further details of the analysis of these simple circuits.

When a system contains more than one linear source of power, then the effect of the combined sources of power shall be analysed. Annex B illustrates the analysis to be used in the most frequently occurring combinations.

If an intrinsically safe system contains more than one source of power, and one or more of these sources are non-linear, the assessment method described in Annex B cannot be used. For this kind of intrinsically safe system, Annex C explains how the system analysis can be conducted if the combination contains a single non-linear power supply.

Figure 1 illustrates the principles of the system’s analysis.

Documents
Document Sharing Hub
Copyright International Society of Automation
Provided by IHS under license with ISA
No reproduction or networking permitted without license from IHS
Full document details: ISA 12.02.05 2011
Licensee=University of Alberta/5966844001, User=sam, albert
Not for Resale, 05/03/2013 09:35:48 MDT

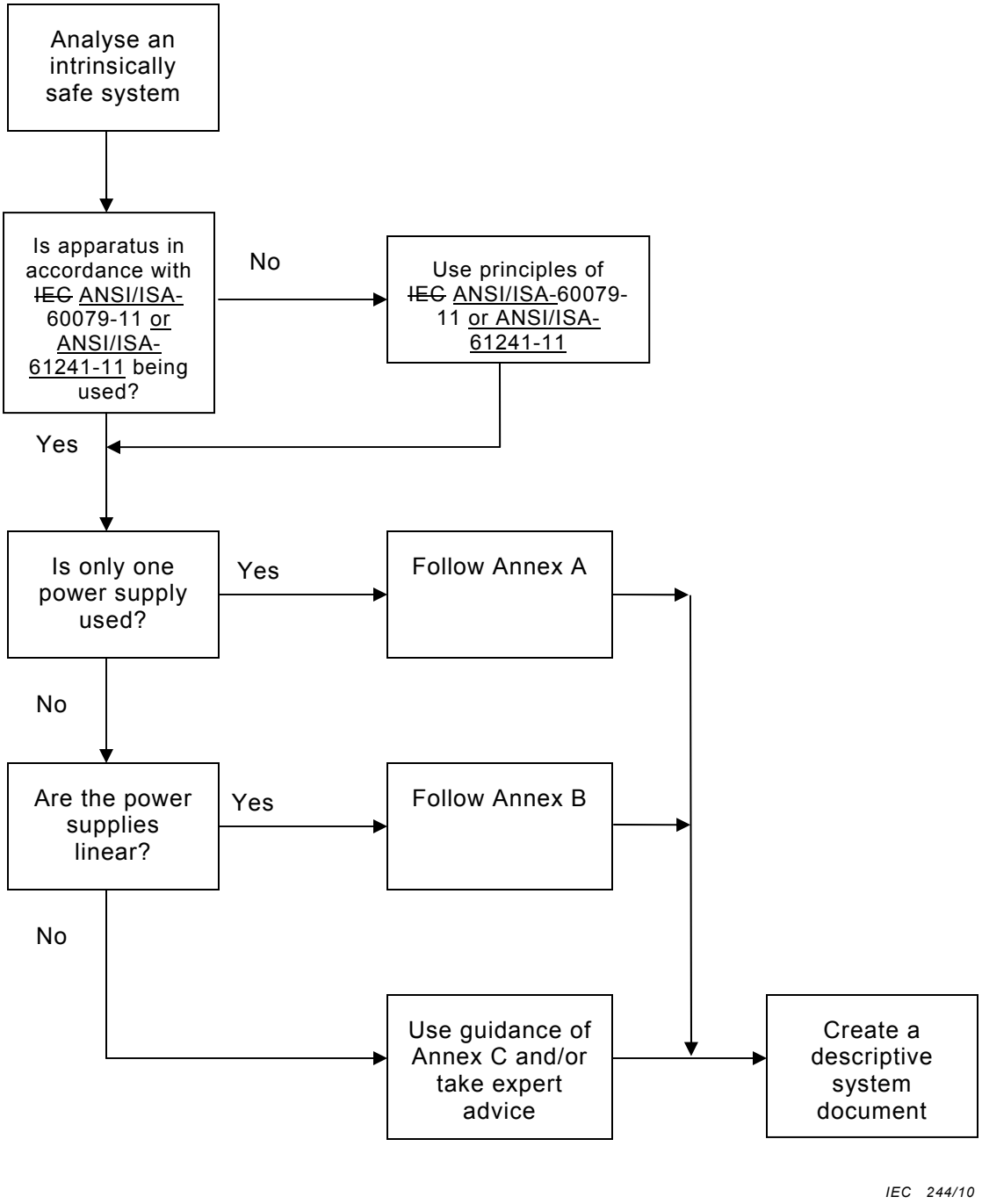

Figure 1 – Systems analysis

13.2 Simple apparatus

Switches, terminals, terminal boxes, plugs and sockets complying with the simple apparatus requirements of ANSI/ISA-60079-11 or ANSI/ISA-61241-11~~IEC 60079-11~~, may be added to a system without modifying the safety assessment. The possible heating effects on simple apparatus shall be considered. When other types of simple apparatus consisting of energy storing components for example capacitors or inductors complying with ANSI/ISA-60079-11 or

Documents
Document Sharing Hub
Copyright International Society of Automation
Provided by IHS under license with ISA
No reproduction or networking permitted without license from IHS
Full document details: ISA 12.02.05 2011
Licensee=University of Alberta/5966844001, User=sam, albert
Not for Resale, 05/03/2013 09:35:48 MDT

ANSI/ISA-61241-11 ~~IEC 60079-11~~ are added to a system, the ~~safety~~ assessment shall take into account their electrical parameters. A typical system using simple apparatus is shown in Figure 2.

Where simple apparatus are intended to contain several separate intrinsically safe circuits, e.g. connectors, plugs and sockets or a resistance thermometer with two separate resistance windings, the separation requirements of ANSI/ISA-60079-11 or ANSI/ISA-61241-11~~IEC 60079-11~~ apply. If they do not conform, then the interconnected circuits shall be assessed as a single intrinsically safe circuit.

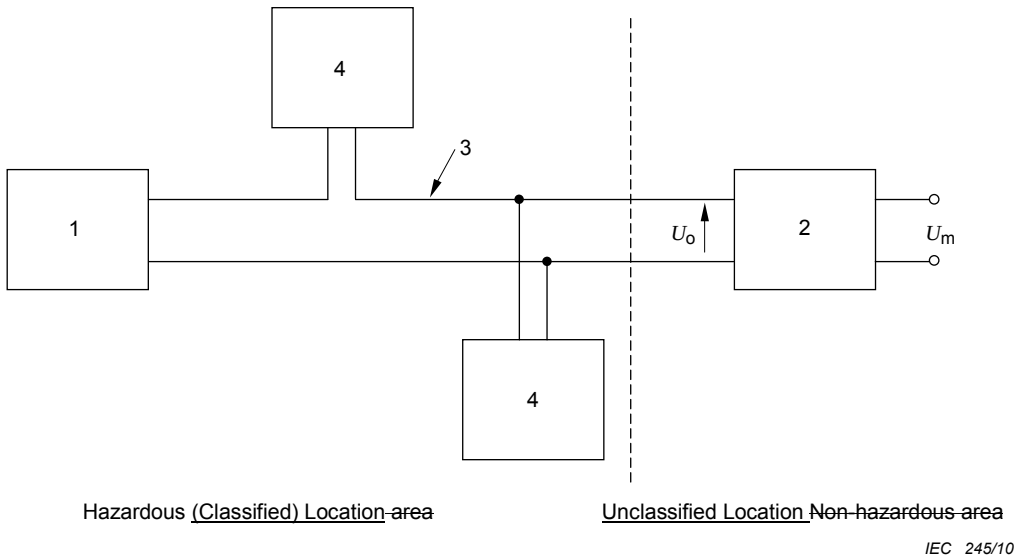

Key
1 ~~listed certified~~ listed intrinsically safe apparatus
2 ~~listed certified~~ listed associated intrinsically safe apparatus
3 ~~cable~~ wiring
4 simple apparatus

Figure 2 – Typical system using simple apparatus

13.3 Analysis of inductive circuits

Where an apparatus has a well-defined inductance and resistance either by virtue of its documentation or construction, then the ~~safety of the~~ inductive aspects of the system shall be confirmed by the process defined in Annex D.

13.4 Faults in ~~multi-core~~ multi-conductor cables

13.4.1 Type of ~~multi-core~~ multi-conductor cables

The faults, if any, which shall be taken into consideration in ~~multi-core~~ multi-conductor cables used within intrinsically safe electrical systems depend upon the type of cable used. The following subclauses detail the cable faults to be assessed for each type of cable.

13.4.2 Type A cable

No faults between circuits shall be taken into consideration if the cable complies with 9.5.2.

13.4.3 Type B cable

No faults between circuits shall be taken into consideration if the cable complies with 9.5.3.

Documents
Document Sharing Hub
Copyright International Society of Automation
Provided by IHS under license with ISA
No reproduction or networking permitted without license from IHS
Full document details: ISA 12.02.05 2011
Licensee=University of Alberta/5966844001, User=sam, albert
Not for Resale, 05/03/2013 09:35:48 MDT

13.4.4 Type C cable

The combination of faults comprising of two short circuits between conductors and simultaneously up to four open circuits of conductors that result in the most onerous condition if the cable complies with 9.5.4.

All circuits in a ~~multi-core~~ multi-conductor cable subject to damage shall adopt the level of protection of the circuit with the lowest level of protection.

13.5 Type verifications and type tests

Where it is necessary to carry out type verifications and/or type tests to establish that a system is adequately safe, then the methods specified in ANSI/ISA-60079-11 or ANSI/ISA-61241-11~~IEC 60079-11~~ shall be used.

14 Marking

All apparatus within the system shall be readily identifiable. The minimum requirement is that the relevant descriptive system document shall be readily traceable. One acceptable technique is a clear instrument loop number, which identifies the loop documentation, which in turn lists the descriptive system document.

Where a system is assessed as a whole and is found to conform to ANSI/ISA-60079-11 or ANSI/ISA-61241-11 ~~IEC 60079-11~~, each piece of apparatus shall be marked in accordance with that standard.

15 Predefined systems

A system and all of its individual devices may be predefined and previously assessed in such a way that the interconnection of the individual devices and cables is sufficiently well known. In such cases, the assessment requirements of this standard can be simplified. One such predefined system is the FISCO system, the assessment of a FISCO system is set forth in Annex I.

NOTE: The requirements for FISCO Power Supplies, Field Devices, and Terminators are contained within ANSI/ISA-60079-27.

Documents
Document Sharing Hub

Copyright International Society of Automation
Provided by IHS under license with ISA
No reproduction or networking permitted without license from IHS
Full document details: ISA 12.02.05 2011

Licensee=University of Alberta/5966844001, User=sam, albert
Not for Resale, 05/03/2013 09:35:48 MDT

This page intentionally left blank.

Documents
Document Sharing Hub

Copyright International Society of Automation
Provided by IHS under license with ISA
No reproduction or networking permitted without license from IHS
Full document details: ISA 12.02.05 2011

Licensee=University of Alberta/5966844001, User=sam, albert
Not for Resale, 05/03/2013 09:35:48 MDT

Annex A
(informative)

Assessment of a simple intrinsically safe system

The majority of intrinsically safe systems are simple systems, containing a single source of power in associated apparatus connected to a single piece of field mounted intrinsically safe apparatus. This standard uses the combination of the temperature transmitter and the intrinsically safe interface shown in Annex E to illustrate the method of analysis.

The initial requirement is to establish the safety data of the two pieces of apparatus in the circuit. This data can be derived from a copy of the ~~certificate~~, instructions or control drawing, which should be available to the system designer. In particular, any specific conditions of use should be taken into account in the system design. Precisely what information is transferred to the system drawing is determined by the necessity for the system analysis to be clearly justified and for it to be relatively simple to create the particular installation drawing from this reference drawing.

The compatibility of the two pieces of apparatus is established by comparison of the data of each apparatus. The sequence is usually as follows.

a) Compare equipment grouping. If they differ then the system takes the least sensitive classification. For example, if one device is IIC and the other IIB then the system becomes IIB. It is usual for a source of power listed ~~certified~~ as IIC to have permissible output parameters (L_o, C_o and L_o/R_o) for IIB and IIA equipment groups as well. If these larger values are used then the parameters used determine the system gas group.

b) Compare levels of protection. If they differ then the system assumes the lowest level of protection. For example, if a device is “ia” and the other “ib” then the system becomes “ib”. A source of power which is listed ~~certified~~ “ib” may also have different output parameters for use in “ic” circuits. If these values are used in the system design then the system becomes “ic”:

c) Determine the temperature classification of the equipment mounted in the hazardous area. Apparatus may have different temperature classifications for different conditions of use (usually dependent on ambient temperature or I_i, U_i and P_i) and the relevant one should be selected and recorded. Furthermore, it should be noted that it is the apparatus which is temperature classified, not the system.

d) The permissible ambient temperature range of each piece of apparatus should be recorded.

e) The voltage (U_o), current (I_o) and power (P_o) output parameters of the source of power should be compared with the input parameters (U_i, I_i and P_i) of the field device, and the output parameters should not exceed the relevant input parameters. Occasionally the safety of the field device is completely specified by only one of these parameters. In these circumstances the unspecified parameters are not relevant.

f) Determine the permitted cable parameters.

   The permitted cable capacitance (C_c) is derived by subtracting the input capacitance of the field device (C_i) from the permitted output capacitance of the source of power (C_o), that is

$$C_c = C_o - C_i.$$

   The permitted cable inductance (L_c) is derived by subtracting the input inductance of the field device (L_i) from the permitted output inductance of the source of power (L_o), that is

Documents
Document Sharing Hub
Copyright International Society of Automation
Provided by IHS under license with ISA
No reproduction or networking permitted without license from IHS
Full document details: ISA 12.02.05 2011
Licensee=University of Alberta/5966844001, User=sam, albert
Not for Resale, 05/03/2013 09:35:48 MDT

$$L_c = L_o - L_i.$$

The permitted L/R ratio of the cable (L_c/R_c) is easily determined provided that the input inductance of the field device is negligible (L_i less than 1 % of L_o). L_c/R_c is then taken to be equal to that of the source of power L_o/R_o. If the inductance of the field device is significant then the equation given in Annex D can be used to calculate the permitted L_c/R_c if this is thought to be desirable. Fortunately, this is not a frequently occurring requirement.

Where a system contains both lumped capacitances and lumped inductances the interaction of these may increase the risk of ignition capable sparks. This concern is confined to fixed inductance and capacitance and not to the distributed parameters of a cable. Consequently, on those rare occasions when **both** the lumped inductance (the sum of L_i of the source of power and the field devices) and the lumped capacitance (the sum of C_i of the source of power and the field devices) are greater than 1 % of the respective output parameters of the source of power L_o and C_o then the permissible output parameters are both to be divided by two. However, the maximum external capacitance C_o derived by using this simple rule shall be limited to a maximum value of 1 μF for Group IIB and 600 nF for Group IIC. It should be stressed that this reduction in output parameters is only applicable on very rare occasions since it is unusual for field devices to have **both** inductive and capacitive input parameters which are significantly large. Frequently, L_i and C_i of a power source are not quoted in the documentation and in these circumstances it can be assumed that they are negligible. There is no suggestion that it is considered necessary to go back and check the safety documentation on existing installations for this most recent requirement. However, new analyses should take this remote possibility into account.

To summarise, it must be checked that either the lumped capacitance or inductance is less than 1 % of the respective output parameters. If it is, then the original calculation is valid. If **both** parameters are greater than 1 % of the output parameters then C_o and L_o of the system should be reduced by a factor of two.

Where a source of power is listed ~~certified~~ “ia” or “ib” then the permitted output parameters L_o, C_o and L_o/R_o are derived using a factor of safety of 1,5 on U_o or I_o respectively. When such a source of power is used in an “ic” circuit, the permitted output parameters may be derived using a unity safety factor. This results in a significant change, which usually removes the necessity to consider cable parameters in detail. Accurate values can be ascertained using the methods and tables in the apparatus standard. An acceptable conservative technique is to multiply the output parameters by two, which normally removes any concern about cable parameters.

g) Check that the level of insulation from earth is acceptable, or that the system earthing requirements are satisfied.

If these criteria are all satisfied, the compatibility of the two pieces of apparatus has been established. A convenient way of recording the analysis is to create a table. The following example (see Table A.1) uses the values from the typical system’s drawing (see Figure E.1) and compares the intrinsically safe interface and the temperature transmitter.

Documents
Document Sharing Hub

Copyright International Society of Automation
Provided by IHS under license with ISA
No reproduction or networking permitted without license from IHS
Full document details: ISA 12.02.05 2011

Licensee=University of Alberta/5966844001, User=sam, albert
Not for Resale, 05/03/2013 09:35:48 MDT

Table A.1 – Simple system analysis

Step	Item	I.S. interface	Temperature transmitter	System
a)	Equipment group	IIC	IIC	IIC
b)	Level of protection	ia	ia	ia
c)	Temperature classification	not applicable	T4	
d)	Ambient temperature	−20 ^{0}C to +60 ^{0}C	−40 ^{0}C to +80 °C	
e)	Parameter comparison			
	Voltage	U_o: 28 V	U_i: 30 V	√
	Current	I_o: 93 mA	I_i: 120 mA	√
	Power	P_o: 650 mW	P_i: 1 W	√
f)	Cable parameters			
	Capacitance	C_o: 83 nF	C_i: 3 nF	C_c: 80 nF
	Inductance	L_o: 4,2 mH	L_i: 10 μH	L_c: 4,2 mH
	L/R ratio	L_o/R_o: 54 μH/Ω		L_c/R_c: 54 μH/Ω
g)	Earthing	Isolated	Isolated	Isolated

Documents
Document Sharing Hub

Copyright International Society of Automation
Provided by IHS under license with ISA
No reproduction or networking permitted without license from IHS
Full document details: ISA 12.02.05 2011

Licensee=University of Alberta/5966844001, User=sam, albert
Not for Resale, 05/03/2013 09:35:48 MDT

This page intentionally left blank.

Documents
Document Sharing Hub

Copyright International Society of Automation
Provided by IHS under license with ISA
No reproduction or networking permitted without license from IHS
Full document details: ISA 12.02.05 2011

Licensee=University of Alberta/5966844001, User=sam, albert
Not for Resale, 05/03/2013 09:35:48 MDT

Annex B
(normative)

Assessment of circuits with more than one source of power

This analysis is only applicable when the power sources considered use a linear resistive limited output. It is not applicable to power sources using other forms of current limitation.

~~IEC 60079-14 contains a simplified procedure of determining the maximum system voltages and currents in intrinsically safe circuits with more than one associated apparatus with linear current/voltage characteristics which gives conservative results, which ensure a safe installation and may be used as an alternative to this annex.~~

Where there is more than one source of power and the interconnections are made under controlled conditions so as to provide adequate segregation and mechanical stability in accordance with ANSI/ISA-60079-11 or ANSI/ISA-61241-11 ~~IEC 60079-11~~, then the interconnections are considered to fail to open and short circuit but not so as to reverse the connections or to change a series into a parallel connection or a parallel connection into a series one. Interconnections made within a rack or panel constructed in a location with adequate quality control and test facilities are an example of the degree of integrity required.

Figure B.1 illustrates the usual series combination. This series situation results in the open circuit voltage U_o being U_1 + U_2 but the possibility of the voltage being U_1 – U_2 is not considered. Considering the safety of the system, three voltages U_1, U_2 and U_o = U_1 + U_2 are considered together with their corresponding currents I_1 and I_2 and the combined

$$I_o = \frac{U_1 + U_2}{R_1 + R_2}$$

Each of the three equivalent circuits has to be assessed for safety using the table showing the permitted short-circuit current corresponding to the voltage and the apparatus group of ANSI/ISA-60079-11 or ANSI/ISA-61241-11~~IEC 60079-11~~. The value of L_o, or optionally L_o/R_o and C_o shall then be established for each circuit and the most onerous value used together with its relevant equivalent circuit.

For level of protection “ia” and “ib” a factor of safety 1,5 shall be used in determining these values in all circumstances. For “ic” a safety factor of 1,0 is sufficient

NOTE Where the two voltages add, the combined circuit will determine the capacitive figure. However, the inductance and if applicable the L_o/R_o ratio may be determined by one of the separate circuits being considered on its own. The minimum inductance does not always coincide with the maximum circuit current and the minimum L_o/R_o ratio, if used, may not be coincident with the minimum inductance.

The matched power available from each of the equivalent circuits shall be determined. The matched power of the combined circuit is the sum of the power available from each circuit only when the sources have the same output current.

When the sources of power are connected in parallel as in Figure B.2, then the three currents I_1, I_2 and I_o = I_1 + I_2 have to be considered with their corresponding voltages U_1, U_2 and

$$U_o = \frac{U_1 R_2 + U_2 R_1}{R_1 + R_2}$$

Documents
Document Sharing Hub
Copyright International Society of Automation
Provided by IHS under license with ISA
No reproduction or networking permitted without license from IHS
Full document details: ISA 12.02.05 2011
Licensee=University of Alberta/5966844001, User=sam, albert
Not for Resale, 05/03/2013 09:35:48 MDT

Each of the three equivalent circuits has to be assessed for safety using the table showing the permitted short-circuit current corresponding to the voltage and the apparatus group of ANSI/ISA-60079-11 or ANSI/ISA 61241-11 ~~IEC 60079-11~~. The values L_o, or optionally L_o/R_o and C_o have to be established for each circuit and the most onerous value used together with its relevant equivalent circuit. The matched power available from each of the three equivalent circuits shall also be established. The matched power of the combined circuit is the sum of the power available from each circuit only when the sources have the same output voltage.

Where two sources of power are connected to the same intrinsically safe circuit and their interconnections are not well defined by reliable interconnections as illustrated in Figure B.3, there is a possibility that the sources of power can be connected in both series and parallel. In these circumstances, all the possible equivalent circuits shall be evaluated, following both the procedures set out. The most onerous output parameters and equivalent circuits shall be utilized in establishing the integrity of the intrinsically safe system.

The hazardous ~~area~~ (classified) location apparatus may contain a source of power, which results in the apparatus having output parameters, for example from internal batteries. When this occurs, the analysis of the system shall include the combination of this source of power with any source of power in the associated apparatus. Such an analysis shall normally include the reversal of the interconnection because of the possible failure of the field wiring.

Having established the representative equivalent circuits, these circuits can be used as if there was a single source of power, and the procedure already discussed in Annex A can be used to establish whether the system as a whole is acceptably safe.

When two or more sources of power with different output voltages are interconnected the resultant circulating current can cause additional dissipation in the regulating circuits. Where the circuits have conventional resistive current limiting, the additional dissipation is not considered to adversely affect intrinsic safety.

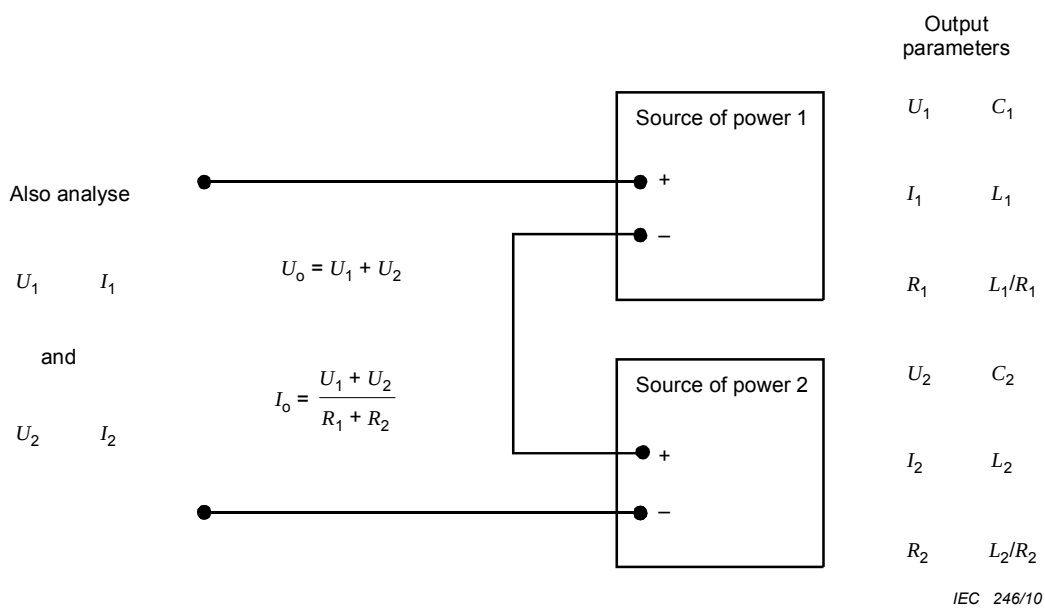

Figure B.1 – Sources of power connected in series

Copyright International Society of Automation
Provided by IHS under license with ISA
No reproduction or networking permitted without license from IHS
Full document details: ISA 12.02.05 2011
Licensee=University of Alberta/5966844001, User=sam, albert
Not for Resale, 05/03/2013 09:35:48 MDT