STANDARD

ISA-88.01-1995 (R2006)

Batch Control Part 1: Models and Terminology

Approved 14 July 2006

Documents
Document Sharing Hub

Full document details: ISA 88.01-1995 (2006)

ISA-88.01-1995 (R2006)
Batch Control, Part 1: Models and Terminology

ISBN: 978-1-934394-01-4

Copyright © 2006 by ISA. All rights reserved. Printed in the United States of America.
No part of this publication may be reproduced, stored in a retrieval system, or transmitted in any form or by any means (electronic, mechanical, photocopying, recording, or otherwise), without the prior written permission of the publisher.

ISA
67 Alexander Drive
P.O. Box 12277
Research Triangle Park, North Carolina 27709

Documents
Document Sharing Hub

Full document details: ISA 88.01-1995 (2006)

Preface

This preface as well as all footnotes and annexes are included for informational purposes and are not part of ISA-88.01-1995 (R2006).

This standard has been prepared as part of the service of the ISA, the international society for measurement and control, toward a goal of uniformity in the field of instrumentation. To be of real value, this document should not be static but should be subject to periodic review. Toward this end, the Society welcomes all comments and criticisms and asks that they be addressed to the Secretary, Standards and Practices Board; ISA; 67 Alexander Drive; P. O. Box 12277; Research Triangle Park, NC 27709; Telephone (919) 990-9227; Fax (919) 549-8288;e-mail: standards@isa.org.

The ISA Standards and Practices Department is aware of the growing need for attention to the metric system of units in general, and the International System of Units (SI) in particular, in the preparation of instrumentation standards, recommended practices, and technical reports. The Department is further aware of the benefits to USA users of ISA standards of incorporating suitable references to the SI (and the metric system) in their business and professional dealings with other countries. Toward this end, this Department will endeavor to introduce SI-acceptable metric units in all new and revised standards to the greatest extent possible. *The Metric Practice Guide*, which has been published by the Institute of Electrical and Electronics Engineers as ANSI/IEEE Std. 268-1992, and future revisions, will be the reference guide for definitions, symbols, abbreviations, and conversion factors.

It is the policy of ISA to encourage and welcome the participation of all concerned individuals and interests in the development of ISA standards, recommended practices, and technical reports. Participation in the ISA standards-making process by an individual in no way constitutes endorsement by the employer of that individual, of ISA, or of any of the standards, recommended practices, and technical reports that ISA develops.

This standard is structured to follow the IEC guidelines. Therefore, the first three sections discuss the *Scope* of the standard, *Normative References, and Definitions*, in that order.

Section 4 is entitled *Batch Processes and Equipment*. The intent of this section is to discuss batch processing and the batch manufacturing plant. Things that are involved in batch manufacturing (e.g., batch process classification, equipment, and processes) are described in this section. The models and terminology defined in this section provide a foundation for understanding the application of batch control to the batch manufacturing plant in Sections 5 and 6.

Section 5 is entitled *Batch Control Concepts*. The intent of this section is to discuss key aspects of batch processing and batch manufacturing plants. This is where control is finally introduced to physical equipment, and the concept of equipment entities is introduced. Recipes are introduced in Section 5. The concepts of Allocation and Arbitration, Modes and States, and Exception Handling are introduced in this section so that they can be applied to the discussions in Section 6.

Section 6 is entitled *Batch Control Activities and Functions*. The intent of the models and terminology introduced in this section is to establish the necessary control activities that are needed to address the diverse control requirements of batch manufacturing. The concept of a Control Activity Model is introduced in this section. Each control activity from the Control Activity Model is discussed in terms of the individual control functions that are needed to address the batch processing, manufacturing, and control requirements of the previous two sections. Note

AVA Documents
Document Sharing Hub

Full document details: ISA 88.01-1995 (2006)

that there will be no attempt to define compliance requirements within this section since the overall purpose of this standard is to define a common approach to defining and modeling batch processes and their associated controls.

This standard (Part 1, Models and Terminology) is intended for people who are

— involved in designing and/or operating batch manufacturing plants;

— responsible for specifying controls and the associated application programs for batch manufacturing plants; or

— involved in the design and marketing of products in the area of batch control.

The following people served as active members of ISA Committee SP88:

NAME	COMPANY
L. Craig, Chairman	Rohm and Haas Company
*R. Mergen, Past Chairman	The Lubrizol Corporation
*T. Fisher, Past Chairman/Editor	The Lubrizol Corporation
C. Gross, Past Managing Director	Dow Chemical Company
*M. Albano	Honeywell, Inc.
A. Aujesky	ICI Australia Engineering
*J. Barrault	Siemens
G. Barron	John Brown Engineers & Constructors BV
R. Baxter	Eastman Kodak Company
*D. Brandl	Groupe Schneider
B. Braunstein	Exxon Chemical Company
*E. Bristol	The Foxboro Company
M. Bruns	Hoechst AG
R. Bullotta	WonderWare
*H. Burns	Fisher • Rosemount
G. Carlo-Stella	Batch Systems International
*B. Casey	Groupe Schneider
D. Chappell	Procter & Gamble Company
*L. Charpentier	GSE Process Solutions
*T. Crowl	Moore Products Company
*B. Cubizolles	Siemens
M. Dawson	Smith-Kline Beecham
*K. Dittman	Johnson Yokogawa
*D. Dodd	The Foxboro Company
*S. Duff	Moore Products Company
*C. Eaves	Intellution, Inc.
*D. Edwards	Johnson Yokogawa
*D. Emerson	GSE Process Solutions
*S. Farmer	ABB Process Automation, Inc.
G. Felton	Ashland Chemical
H. Fittler	Honeywell Regelsysteme
*A. Ghosh	The Foxboro Company
*P. Gustafson	Hartmann & Braun

*One vote per company

Documents
Document Sharing Hub

Full document details: ISA 88.01-1995 (2006)

NAME	COMPANY
*R. Hall	PID, Inc.
*W. Hawkins	Fisher • Rosemount
N. Haxthausen	Novo-Nordisk Engineering
*C. Hertz	Bailey Controls Company
S. Hjelmager	CRI Industrial Systems A/S
T. Hoekstra	Yokogawa Europe
*T. Hollowell	Fisher • Rosemount
*D. Hornbeck	Allen-Bradley Co.
*D. Imming	Fisher • Rosemount
*S. Jayanthi	Intellution, Inc.
*B. Jensen	Johnson Yokogawa
T. Jonsson	ABB Automation AB
H. Kayser	Consultant
G. Klipfel	Upjohn Company
*D. Leach	Air Products & Chemicals Company
T. Leffert	3M
*B. Lightle	Allen-Bradley Company
*W. Loner	Bailey Controls Company
R. Lotz	Consultant
B. Lozier	Pacific Access Computer
*D. Macias	Fisher • Rosemount
S. Mallaband	Bass Brewers, Ltd.
*E. Massey	Honeywell, Inc.
W. McFarlane	Valmet Automation, Inc.
*N. Meierhoefer	Hartmann & Braun
*T. Müller-Heinzerling	Siemens
L. Natiello	Kraft General Foods
K. Ng	Office of Naval Research
*P. Nowicki	ABB Process Automation, Inc.
A. Pampel	A. F. Pampel Consulting
*A. Pawlus	Honeywell, Inc.
*S. Prichard	Fisher • Rosemount
A. Rabinowitz	Consultant
H. Rosenof	Gensym Corporation
*J. Ruhe	Bailey Controls Company
P. Saebye	CRI Industrial Systems A/S
*M. Saucier	PID, Inc.
*C. Schmidt	Siemens
*J. Schwatmann	Siemens
J. Shaffer	Consultant
R. Shilts	Modicon AEG
E. Smith	Good Manufacturing Practices, Inc.
*K. Spencer	ABB Process Automation, Inc.
*J. Sten	E. I. du Pont de Nemours & Company (Ret.)
*F. Sutter	Fisher • Rosemount
*B. Sykes	Johnson Yokogawa
R. Thome	Merck
T. Tom	Elsag Bailey

*One vote per company

Documents
Document Sharing Hub

Full document details: ISA 88.01-1995 (2006)

NAME	COMPANY
J. Unger	Chesebrough-Pond's (Unilever)
*J. Vardy	The Foxboro Company
J. Verhulst	Biogen, Inc.
J. Via III	Alcon Labs
*N. Vroom	Honeywell, Inc.
*H. Wähner	Hartmann & Braun
*M. Warburton	ABB Process Automation, Inc.
R. Watson	Mettler-Toledo, Inc.
*A. Webster	E. I. du Pont de Nemours & Company
A. Weidenbach	Eastman Chemical Company
*S. Whitman	Johnson Yokogawa
*E. Whitmer	Honeywell, Inc.
*G. Wilcox	Air Products & Chemicals Company

This published standard was approved for publication by the ISA Standards and Practices Board in February 1995.

NAME	COMPANY
M. Widmeyer, Vice President	The Supply System
H. Baumann	H. D. Baumann & Associates, Ltd.
D. Bishop	Chevron USA Production Company
P. Brett	Honeywell, Inc.
W. Calder III	Foxboro Company
H. Dammeyer	The Ohio State University
R. Dieck	Pratt & Whitney
H. Hopkins	Utility Products of Arizona
A. Iverson	Lyondell Petrochemical Company
K. Lindner	Endress + Hauser GmbH + Company
T. McAvinew	Metro Wastewater Reclamation District
A. McCauley, Jr.	Chagrin Valley Controls, Inc.
G. McFarland	Consultant
J. Mock	Consultant
E. Montgomery	Fluor Daniel, Inc.
D. Rapley	Rapley Engineering Services
R. Reimer	Allen-Bradley Company
R. Webb	Pacific Gas & Electric Company
W. Weidman	Consultant
J. Weiss	Electric Power Research Institute
J. Whetstone	National Institute of Standards & Technology
C. Williams	Eastman Kodak Company
G. Wood	Graeme Wood Consulting
M. Zielinski	Fisher • Rosemount

*One vote per company

Documents
Document Sharing Hub

Full document details: ISA 88.01-1995 (2006)

The following people served as active members of ISA Committee SP88 and reaffirmed ISA-88.01-1995 (R2006):

NAME	COMPANY
L. Craig, Chairman	BR&L Consulting
N. Sands, Managing Director	E I du Pont
M. Albano	Honeywell, Inc.
D. Chappell	Proctor and Gamble
L. Charpentier	NovaTech Process Solutions LLC
E. DelaHostria	Rockwell Automation
D. Emerson	Yokogawa
L. Falkenau	G. Finucci
A. Gillanders	DynoChem Inc.
W. Hawkins	HLQ Ltd.
B. Korkmaz	Automation Vision Inc.
E. Lynch	Pfizer Inc.
P. Martin	ABB Inc.
T. Heinzerling	Siemens AG
T. Nash	Schering-Plough Technical Operations
N. Pettus	Emerson Process Management
J. Vieille	Psynapses
K. Waters	Genentech

This published standard was approved for reaffirmation by the ISA Standards and Practices Board on 14 July 2006.

NAME	COMPANY
I. Verhappen, Vice President	MTL Instrument Group
F. Amir	E I Du Pont Company
D. Bishop	David N Bishop Consultant
M. Coppler	Ametek Inc.
B. Dumortier	Schneider Electric
W. Holland	Consultant
E. Icayan	ACES Inc.
A. Iverson	Ivy Optiks
R. Jones	Consultant
K. Lindner	Endress + Hauser Process Solutions AG
V. Maggioli	Feltronics Corporation
T. McAvinew	Jacobs Engineering Group
A. McCauley	Chagrin Valley Controls Inc.
G. McFarland	Emerson Process Mgmt. Pwr & Water Solutions
R. Reimer	Rockwell Automation
N. Sands	E I du Pont
H. Sasajima	Yamatake Corporation
T. Schnaare	Rosemount Inc.
J. Tatera	Tatera & Associates Inc.
R. Webb	Robert C. Webb PE
W. Weidman	Worley Parsons
J. Weiss	KEMA Inc.
M. Widmeyer	Stanford Linear Accelerator Center
M. Zielinski	Emerson Process Management

Documents
Document Sharing Hub

Full document details: ISA 88.01-1995 (2006)

Documents
Document Sharing Hub

Full document details: ISA 88.01-1995 (2006)

Contents

1 Scope **15**

2 Normative references **15**

3 Definitions **15**

4 Batch processes and equipment **19**

4.1 Processes, batches, and batch processes 20

4.2 Physical model 22

4.3 Process cell classification 25

5 Batch control concepts **29**

5.1 Structure for batch control 29

5.2 Equipment entities 32

5.3 Recipes 37

5.4 Production plans and schedules 53

5.5 Production information 54

5.6 Allocation and arbitration 56

5.7 Modes and states 57

5.8 Exception handling 63

6 Batch control activities and functions **63**

6.1 Control activities 64

6.2 Recipe management 68

6.3 Production planning and scheduling 72

6.4 Production information management 72

6.5 Process management 78

6.6 Unit supervision 82

6.7 Process control 84

6.8 Personnel and environmental protection 86

Annexes

A — (normative) Model philosophy 89

B — (informative) Bibliography 97

Documents
Document Sharing Hub

Full document details: ISA 88.01-1995 (2006)

Figures

1 — Process model (Entity - Relationship diagram) 21
2 — Physical model 23
3 — Single-path structure 26
4 — Multiple-path structure 27
5 — Network structure 28
6 — Procedural control model 30
7 — Procedural control/equipment mapping to achieve process functionality 33
8 — Recipe types 38
9 — General recipe procedure 42
10 — Master recipe procedure 43
11 — Procedural element relationships in the site recipe and master recipe 44
12 — Control recipe procedure/equipment control separation 46
13 — Control recipe procedure example with unit procedures, operations, and phases 48
14 — Control recipe procedure example with unit procedures and operations 49
15 — Control recipe procedure example with unit procedures 50
16 — Control recipe procedure example with only a procedure 51
17 — Control recipe procedure/equipment control collapsibility examples 52
18 — State transition diagram for example states for procedural elements 61
19 — Control activity model 65
20 — Simultaneous definition/selection of procedural elements and equipment entities 68
21 — Recipe management 69
22 — Process management 78
23 — Unit supervision 82
24 — Process control 85
A.1 — Basic and looped associations in Entity-Relationship diagrams 90
A.2 — Labeled associations in Entity-Relationship diagrams 91
A.3 — Process model (Entity-Relationship diagram) 92
A.4 — Process control (control activity with breakdown into control functions) 93
A.5 — State transition diagram 94
A.6 — Single-path structure (physical drawing) 94
A.7 — Site recipe procedure to master recipe procedure relationship (nesting model) 95

Tables

1 — Possible implementations of example modes 59
2 — State transition matrix for example states for procedural elements 60

Documents
Document Sharing Hub

Full document details: ISA 88.01-1995 (2006)

Foreword

1) The formal decisions or agreements of the IEC on technical matters, prepared by technical committees on which all the National Committees having a special interest therein are represented, express, as nearly as possible, an international consensus of opinion on the subjects dealt with.

2) They have the form of recommendations for international use and they are accepted by the National Committees in that sense.

3) In order to promote international unification, the IEC expresses the wish that all National Committees should adopt the text of the IEC recommendation for their national rules insofar as national conditions will permit. Any divergence between the IEC recommendation and the corresponding national rules should, as far as possible, be clearly indicated in the latter.

4) The IEC has not laid down any procedure concerning marking as an indication of approval and has no responsibility when an item of equipment is declared to comply with one of its recommendations.

This part of this International Standard has been prepared by IEC/SC65A/WG11 and ISA SP88.

It forms part 1 of a series, the other part being Part 2: Data structures and guidelines for languages.

Annex A forms an integral part of this part of this international standard. Refer to Annex A for an explanation of the format and general associations used in creating the diagrams in this international standard. Annex B is for information only.

Documents
Document Sharing Hub

Full document details: ISA 88.01-1995 (2006)

Documents
Document Sharing Hub

Full document details: ISA 88.01-1995 (2006)

Introduction

This part of this international standard on Batch Control provides standard models and terminology for defining the control requirements for batch manufacturing plants. The models and terminology defined in this standard

— emphasize good practices for the design and operation of batch manufacturing plants;

— can be used to improve control of batch manufacturing plants; and

— can be applied regardless of the degree of automation.

Specifically, this standard provides a standard terminology and a consistent set of concepts and models for batch manufacturing plants and batch control that will improve communications between all parties involved; and that will

— reduce the user's time to reach full production levels for new products;

— enable vendors to supply appropriate tools for implementing batch control;

— enable users to better identify their needs;

— make recipe development straightforward enough to be accomplished without the services of a control systems engineer;

— reduce the cost of automating batch processes; and

— reduce life-cycle engineering efforts.

It is <u>not</u> the intent of this standard to

— suggest that there is only <u>one</u> way to implement or apply batch control;

— force users to abandon their current way of dealing with their batch processes; or

— restrict development in the area of batch control.

The models presented in this standard are presumed to be complete as indicated. However, they may be collapsed and expanded as described below. The unit and the control module levels may not be omitted from the physical model. The master recipe and the control recipe may not be omitted from the recipe types model. Specific rules for collapsing and expanding these models are not covered in this standard.

— Collapsing: Elements in the models may be omitted as long as the model remains consistent, and the functions of the element removed are taken into account.

— Expanding: Elements may be added to the modules. When they are added between related elements, the integrity of the original relationship should be maintained.

Documents
Document Sharing Hub

Full document details: ISA 88.01-1995 (2006)

Documents
Document Sharing Hub

Full document details: ISA 88.01-1995 (2006)

1 Scope

This part of the standard on Batch Control defines reference models for batch control as used in the process industries and terminology that helps explain the relationships between these models and terms. This standard may not apply to all batch control applications.

2 Normative references

The following normative documents contain provisions, which through reference in this text, constitute provisions of this part of this standard. At the time of publication, the editions indicated were valid. All normative documents are subject to revision, and parties to agreements based on this part of this standard are encouraged to investigate the possibility of applying the most recent editions of the normative documents indicated below. Members of IEC and ISO maintain registers of currently valid normative documents.

IEC 848: 1988, *Preparation of function charts for control systems*

NOTE – Structures defined in IEC 848 may be useful in the definition of procedural control, and in particular in the definition of a phase.

IEC 902: 1987, *Industrial-process measurement and control — Terms and definitions*

NOTE – Definitions found in IEC 902 were used as a basis for definitions in this standard. Where necessary, the specific connotation of terms used in batch control were included as definitions in this standard.

3 Definitions

For the purposes of this part of this international standard, the following definitions apply.

3.1 allocation: A form of coordination control that assigns a resource to a batch or unit.

NOTE – An allocation can be for the entire resource or for portions of a resource.

3.2 arbitration: A form of coordination control that determines how a resource should be allocated when there are more requests for the resource than can be accommodated at one time.

3.3 area: A component of a batch manufacturing site that is identified by physical, geographical, or logical segmentation within the site.

NOTE – An area may contain process cells, units, equipment modules, and control modules.

3.4 basic control: Control that is dedicated to establishing and maintaining a specific state of equipment or process condition.

NOTE – Basic control may include regulatory control, interlocking, monitoring, exception handling, and discrete or sequential control.

AVA Documents
Document Sharing Hub

Full document details: ISA 88.01-1995 (2006)

3.5 batch: 1.) The material that is being produced or that has been produced by a single execution of a batch process. 2.) An entity that represents the production of a material at any point in the process.

NOTE – Batch means both the material made by and during the process and also an entity that represents the production of that material. Batch is used as an abstract contraction of the words "the production of a batch."

3.6 batch control: Control activities and control functions that provide a means to process finite quantities of input materials by subjecting them to an ordered set of processing activities over a finite period of time using one or more pieces of equipment.

3.7 batch process: A process that leads to the production of finite quantities of material by subjecting quantities of input materials to an ordered set of processing activities over a finite period of time using one or more pieces of equipment.

3.8 batch schedule: A list of batches to be produced in a specific process cell.

NOTE – The batch schedule typically contains such information as what is to be produced, how much is to be produced, when or in what order the batches are to be produced, and what equipment is to be used.

3.9 common resource: A resource that can provide services to more than one requester.

NOTE – Common resources are identified as either exclusive-use resources or shared-use resources (3.22 and 3.54).

3.10 control module: The lowest level grouping of equipment in the physical model that can carry out basic control.

NOTE – This term applies to both the physical equipment and the equipment entity.

3.11 control recipe: A type of recipe which, through its execution, defines the manufacture of a single batch of a specific product.

3.12 coordination control: A type of control that directs, initiates, and/or modifies the execution of procedural control and the utilization of equipment entities.

3.13 enterprise: An organization that coordinates the operation of one or more sites.

3.14 equipment control: The equipment-specific functionality that provides the actual control capability for an equipment entity, including procedural, basic, and coordination control, and that is not part of the recipe.

3.15 equipment entity: A collection of physical processing and control equipment and equipment control grouped together to perform a certain control function or set of control functions.

3.16 equipment module: A functional group of equipment that can carry out a finite number of specific minor processing activities.

NOTES

1 An equipment module is typically centered around a piece of process equipment (a weigh tank, a process heater, a scrubber, etc.). This term applies to both the physical equipment and the equipment entity.

2 Examples of minor process activities are dosing and weighing.

3.17 equipment operation: An operation that is part of equipment control.

3.18 equipment phase: A phase that is part of equipment control.

Documents
Document Sharing Hub

Full document details: ISA 88.01-1995 (2006)

3.19 equipment procedure: A procedure that is part of equipment control.

3.20 equipment unit procedure: A unit procedure that is part of equipment control.

3.21 exception handling: Those functions that deal with plant or process contingencies and other events which occur outside the normal or desired behavior of batch control.

3.22 exclusive-use resource: A common resource that only one user can use at any given time.

3.23 formula: A category of recipe information that includes process inputs, process parameters, and process outputs.

3.24 general recipe: A type of recipe that expresses equipment and site independent processing requirements.

3.25 header: Information about the purpose, source and version of the recipe such as recipe and product identification, creator, and issue date.

3.26 ID: A unique identifier for batches, lots, operators, technicians, and raw materials.

3.27 line; train: See definition for train.

3.28 lot: A unique amount of material having a set of common traits.

NOTE – Some examples of common traits are material source, the master recipe used to produce the material, and distinct physical properties.

3.29 master recipe: A type of recipe that accounts for equipment capabilities and may include process cell-specific information.

3.30 mode: The manner in which the transition of sequential functions are carried out within a procedural element or the accessibility for manipulating the states of equipment entities manually or by other types of control.

3.31 operation: A procedural element defining an independent processing activity consisting of the algorithm necessary for the initiation, organization, and control of phases.

3.32 path; stream: The order of equipment within a process cell that is used, or is expected to be used, in the production of a specific batch.

3.33 personnel and environmental protection: The control activity that

— prevents events from occurring that would cause the process to react in a manner that would jeopardize personnel safety and/or harm the environment; and/or

— takes additional measures, such as starting standby equipment, to prevent an abnormal condition from proceeding to a more undesirable state that would jeopardize personnel safety and/or harm the environment.

3.34 phase: The lowest level of procedural element in the procedural control model.

3.35 procedural control: Control that directs equipment-oriented actions to take place in an ordered sequence in order to carry out some process-oriented task.

3.36 procedural element: A building block for procedural control that is defined by the procedural control model.

Documents
Document Sharing Hub

Full document details: ISA 88.01-1995 (2006)

3.37 procedure: The strategy for carrying out a process.

NOTE – In general, it refers to the strategy for making a batch within a process cell. It may also refer to a process that does not result in the production of product, such as a clean-in-place procedure.

3.38 process: A sequence of chemical, physical, or biological activities for the conversion, transport, or storage of material or energy.

3.39 process action: Minor processing activities that are combined to make up a process operation.

NOTE – Process actions are the lowest level of processing activity within the process model.

3.40 process cell: A logical grouping of equipment that includes the equipment required for production of one or more batches. It defines the span of logical control of one set of process equipment within an area.

NOTE – This term applies to both the physical equipment and the equipment entity.

3.41 process control: The control activity that includes the control functions needed to provide sequential, regulatory, and discrete control and to gather and display data.

3.42 process input: The identification and quantity of a raw material or other resource required to make a product.

3.43 process management: The control activity that includes the control functions needed to manage batch production within a process cell.

3.44 process operation: A major processing activity that usually results in a chemical or physical change in the material being processed and that is defined without consideration of the actual target equipment configuration.

3.45 process output: An identification and quantity of material or energy expected to result from one execution of a control recipe.

3.46 process parameter: Information that is needed to manufacture a material but does not fall into the classification of process input or process output.

NOTE – Examples of process parameter information are temperature, pressure, and time.

3.47 process stage: A part of a process that usually operates independently from other process stages and that usually results in a planned sequence of chemical or physical changes in the material being processed.

3.48 recipe: The necessary set of information that uniquely defines the production requirements for a specific product.

NOTE – There are four types of recipes defined in this standard: general, site, master, and control.

3.49 recipe management: The control activity that includes the control functions needed to create, store, and maintain general, site, and master recipes.

3.50 recipe operation: An operation that is part of a recipe procedure in a master or control recipe.

3.51 recipe phase: A phase that is part of a recipe procedure in a master or control recipe.

3.52 recipe procedure: The part of a recipe that defines the strategy for producing a batch.

Documents
Document Sharing Hub

Full document details: ISA 88.01-1995 (2006)

3.53 recipe unit procedure: A unit procedure that is part of a recipe procedure in a master or control recipe.

3.54 shared-use resource: A common resource that can be used by more than one user at a time.

3.55 site: A component of a batch manufacturing enterprise that is identified by physical, geographical, or logical segmentation within the enterprise.

NOTE – A site may contain areas, process cells, units, equipment modules, and control modules.

3.56 site recipe: A type of recipe that is site specific.

NOTE – Site recipes may be derived from general recipes recognizing local constraints, such as language and available raw materials.

3.57 state: The condition of an equipment entity or of a procedural element at a given time.

NOTE – The number of possible states and their names vary for equipment and for procedural elements.

3.58 stream; path: See definition for path.

3.59 train; line: A collection of one or more units and associated lower level equipment groupings that has the ability to be used to make a batch of material.

3.60 unit: A collection of associated control modules and/or equipment modules and other process equipment in which one or more major processing activities can be conducted.

NOTES

1 Units are presumed to operate on only one batch at a time. Units operate relatively independently of one another.

2 This term applies to both the physical equipment and the equipment entity.

3 Examples of major processing activities are react, crystallize, and make a solution.

3.61 unit procedure: A strategy for carrying out a contiguous process within a unit. It consists of contiguous operations and the algorithm necessary for the initiation, organization, and control of those operations.

3.62 unit recipe: The part of a control recipe that uniquely defines the contiguous production requirements for a unit.

NOTE – The unit recipe contains the unit procedure and its related formula, header, equipment requirements, and other information.

3.63 unit supervision: The control activity that includes control functions needed to supervise the unit and the unit's resources.

4 Batch processes and equipment

This section provides an overview of batch processing and the batch manufacturing plant. The models and terminology defined in this section provide a foundation for understanding the application of batch control to the batch manufacturing plant in Sections 5 and 6. Specifically, this section discusses batch processes, a physical model, and process cell classification.

Documents
Document Sharing Hub

Full document details: ISA 88.01-1995 (2006)

4.1 Processes, batches, and batch processes

A process is a sequence of chemical, physical or biological activities for the conversion, transport or storage of material or energy. Industrial manufacturing processes can generally be classified as continuous, discrete parts manufacturing, or batch. How a process is classified depends on whether the output from the process appears in a continuous flow (continuous), in finite quantities of parts (discrete parts manufacturing), or in finite quantities of material (batches). Although aspects of this standard may apply to discrete parts manufacturing or continuous processes, this standard does not specifically address these types of processes.

4.1.1 Continuous processes

In a continuous process, materials are passed in a continuous flow through processing equipment. Once established in a steady operating state, the nature of the process is not dependent on the length of time of operation. Start-ups, transitions, and shutdowns do not usually contribute to achieving the desired processing.

4.1.2 Discrete parts manufacturing processes

In a discrete parts manufacturing process, products are classified into production lots that are based on common raw materials, production requirements, and production histories. In a discrete parts manufacturing process, a specified quantity of product moves as a unit (group of parts) between workstations, and each part maintains its unique identity.

4.1.3 Batch processes

The batch processes addressed in this standard lead to the production of finite quantities of material (batches) by subjecting quantities of input materials to a defined order of processing actions using one or more pieces of equipment. The product produced by a batch process is called a batch. Batch processes are discontinuous processes. Batch processes are neither discrete nor continuous; however, they have characteristics of both.

The subdivisions of a batch process can be organized in a hierarchical fashion as shown in Figure 1. The example batch process used in this section is the production of polyvinyl chloride by the polymerization of vinyl chloride monomer.

Documents
Document Sharing Hub

Full document details: ISA 88.01-1995 (2006)

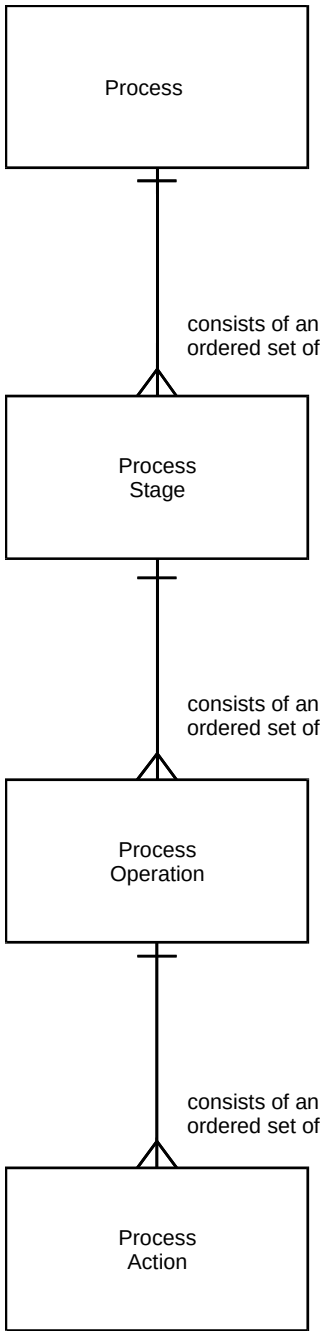

Figure 1 — Process model (Entity - Relationship diagram)

Documents
Document Sharing Hub
Full document details: ISA 88.01-1995 (2006)

4.1.3.1 Process stages

The process consists of one or more process stages which are organized as an ordered set, which can be serial, parallel, or both. A process stage is a part of a process that usually operates independently from other process stages. It usually results in a planned sequence of chemical or physical changes in the material being processed. Typical process stages in the polyvinyl chloride process might be the following:

— Polymerize: Polymerize vinyl chloride monomer into polyvinyl chloride.

— Recover: Recover residual vinyl chloride monomer.

— Dry: Dry polyvinyl chloride.

4.1.3.2 Process operations

Each process stage consists of an ordered set of one or more process operations. Process operations represent major processing activities. A process operation usually results in a chemical or physical change in the material being processed. Typical process operations for the polymerization of vinyl chloride monomer into polyvinyl chloride process stage might be the following:

— Prepare reactor: Evacuate the reactor to remove oxygen.

— Charge: Add demineralized water and surfactants.

— React: Add vinyl chloride monomer and catalyst, heat to 55 - 60°C, and hold at this temperature until the reactor pressure decreases.

4.1.3.3 Process actions

Each process operation can be subdivided into an ordered set of one or more process actions that carry out the processing required by the process operation. Process actions describe minor processing activities that are combined to make up a process operation. Typical process actions for the react process operation might be the following:

— Add: Add the required amount of catalyst to the reactor.

— Add: Add the required amount of vinyl chloride monomer to the reactor.

— Heat: Heat the reactor contents to 55 - 60°C.

— Hold: Hold the reactor contents at 55 - 60°C until the reactor pressure decreases.

4.2 Physical model

This section discusses a physical model that can be used to describe the physical assets of an enterprise in terms of enterprises, sites, areas, process cells, units, equipment modules, and control modules.

The physical assets of an enterprise involved in batch manufacturing are usually organized in a hierarchical fashion as described in Figure 2. Lower level groupings are combined to form higher levels in the hierarchy. In some cases, a grouping within one level may be incorporated into another grouping at that same level.

The model has seven levels, starting at the top with an enterprise, a site, and an area. These three levels are frequently defined by business considerations and are not modeled further in this

Documents
Document Sharing Hub

Full document details: ISA 88.01-1995 (2006)

document. The three higher levels are part of the model to properly identify the relationship of the lower level equipment to the manufacturing enterprise.

The lower four levels of this model refer to specific equipment types. An equipment type in Figure 2 is a collection of physical processing and control equipment grouped together for a specific purpose. The lower levels in the model are specific to technically defined and bounded groupings of equipment. The four lower equipment levels (process cells, units, equipment modules, and control modules) are defined by engineering activities (see 5.2.3 and 6.1.3). During these engineering activities, the equipment at lower levels is grouped together to form a new higher level equipment grouping. This is done to simplify operation of that equipment by treating it as a single larger piece of equipment. Once created, the equipment cannot be split up except by re-engineering the equipment in that level.

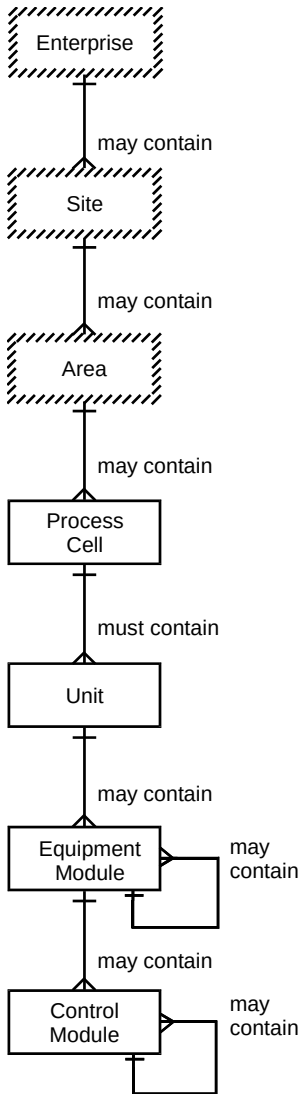

NOTE – The boxes for the top three levels are shown with slashed lines to indicate that the criteria that are used for configuring the boundaries of these three levels is often beyond the scope of batch control and this standard. Therefore, criteria for configuring the boundaries of these three levels of the physical model will not be discussed in this standard.

Figure 2 — Physical model

Documents
Document Sharing Hub

Full document details: ISA 88.01-1995 (2006)

4.2.1 Enterprise level

An enterprise is a collection of one or more sites. It may contain sites, areas, process cells, units, equipment modules, and control modules.

The enterprise is responsible for determining what products will be manufactured, at which sites they will be manufactured, and in general how they will be manufactured.

There are many factors other than batch control that affect the boundaries of an enterprise. Therefore, the criteria for configuring the boundaries of an enterprise are not covered in this standard.

4.2.2 Site level

A site is a physical, geographical, or logical grouping determined by the enterprise. It may contain areas, process cells, units, equipment modules, and control modules.

The boundaries of a site are usually based on organizational or business criteria as opposed to technical criteria. There are many factors other than batch control that affect these boundaries. Therefore, the criteria for configuring the boundaries of a site are not covered in this standard.

4.2.3 Area level

An area is a physical, geographical, or logical grouping determined by the site. It may contain process cells, units, equipment modules, and control modules.

The boundaries of an area are usually based on organizational or business criteria as opposed to technical criteria. There are many factors other than batch control that affect these boundaries. Therefore, the criteria for configuring the boundaries of an area are not covered in this standard.

4.2.4 Process cell level

A process cell contains all of the units, equipment modules, and control modules required to make one or more batches.

Process control activities must respond to a combination of control requirements using a variety of methods and techniques. Requirements that cause physical control actions may include responses to process conditions or to comply with administrative requirements.

A frequently recognized subdivision of a process cell is the train. A train is composed of all units and other equipment that may be utilized by a specific batch. A batch does not always use all the equipment in a train. Furthermore, more than one batch and more than one product may use a train simultaneously. The order of equipment actually used or expected to be used by a batch is called the path. Although a process cell may contain more than one train, no train may contain equipment outside the boundaries of the process cell.

A process cell is a logical grouping of equipment that includes the equipment required for production of one or more batches. It defines the span of logical control of one set of process equipment within an area. The existence of the process cell allows for production scheduling on a process cell basis, and also allows for process cell-wide control strategies to be designed. These process cell-wide control strategies might be particularly useful in emergency situations.

4.2.5 Unit level

A unit is made up of equipment modules and control modules. The modules that make up the unit may be configured as part of the unit or may be acquired temporarily to carry out specific tasks.

One or more major processing activities — such as react, crystallize, and make a solution — can be conducted in a unit. It combines all necessary physical processing and control equipment

AVA Documents
Document Sharing Hub

Full document details: ISA 88.01-1995 (2006)

required to perform those activities as an independent equipment grouping. It is usually centered on a major piece of processing equipment, such as a mixing tank or reactor. Physically, it includes or can acquire the services of all logically related equipment necessary to complete the major processing task(s) required of it. Units operate relatively independently of each other.

A unit frequently contains or operates on a complete batch of material at some point in the processing sequence of that batch. However, in other circumstances it may contain or operate on only a portion of a batch. This standard presumes that the unit does not operate on more than one batch at the same time.

4.2.6 Equipment module level

Physically, the equipment module may be made up of control modules and subordinate equipment modules. An equipment module may be part of a unit or a stand-alone equipment grouping within a process cell. If engineered as a stand-alone equipment grouping, it can be an exclusive-use resource or a shared-use resource.

An equipment module can carry out a finite number of specific minor processing activities such as dosing and weighing. It combines all necessary physical processing and control equipment required to perform those activities. It is usually centered on a piece of processing equipment, such as a filter. Functionally, the scope of the equipment module is defined by the finite tasks it is designed to carry out.

4.2.7 Control module level

A control module is typically a collection of sensors, actuators, other control modules, and associated processing equipment that, from the point of view of control, is operated as a single entity. A control module can also be made up of other control modules. For example, a header control module could be defined as a combination of several on/off automatic block valve control modules.

Some examples of control modules are

— a regulating device consisting of a transmitter, a controller, and a control valve that is operated via the set point of the device;

— a state-oriented device that consists of an on/off automatic block valve with position feedback switches, that is operated via the set point of the device; or

— a header that contains several on/off automatic block valves and that coordinates the valves to direct flow to one or several destinations based upon the set point directed to the header control module.

4.3 Process cell classification

This section discusses the classification of process cells by the number of different products manufactured in the process cell and by the physical structure of the equipment used in the manufacturing.

4.3.1 Classification by number of products

A process cell is classified as single-product or multi-product based on the number of products planned for production in that process cell.

A *single product* process cell produces the same product in each batch. Variations in procedures and parameters are possible. For example, variations may occur in order to compensate for

Documents
Document Sharing Hub

Full document details: ISA 88.01-1995 (2006)

differences in equipment, to compensate for substitute raw materials, to compensate for changes in environmental conditions, or to optimize the process.

A *multi-product* process cell produces different products utilizing different methods of production or control. There are two possibilities:

— All products are produced with the same procedure using different formula values (varying materials and/or process parameters).

— The products are produced using different procedures.

4.3.2 Classification by physical structure

The basic types of physical structures discussed here are *single path*, *multiple path*, and *network*.

A single-path structure is a group of units through which a batch passes sequentially (see Figure 3). A single-path structure could be a single unit, such as a reactor, or several units in sequence. Multiple input materials are typically used; multiple finished materials may be generated. Several batches may be in progress at the same time.

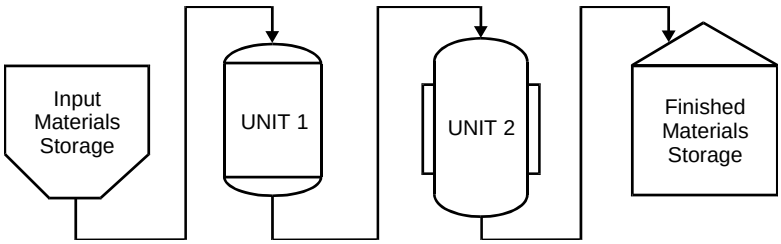

Figure 3 — Single-path structure

Documents
Document Sharing Hub
Full document details: ISA 88.01-1995 (2006)

A *multiple-path* structure is shown in Figure 4. It consists of multiple single-path structures in parallel with no product transfer between them. The units may share raw material sources and product storage. Several batches may be in progress at the same time. Although units within a multi-path structure may be physically similar, it is possible to have paths and units within a multi-path structure that are of radically different physical design.

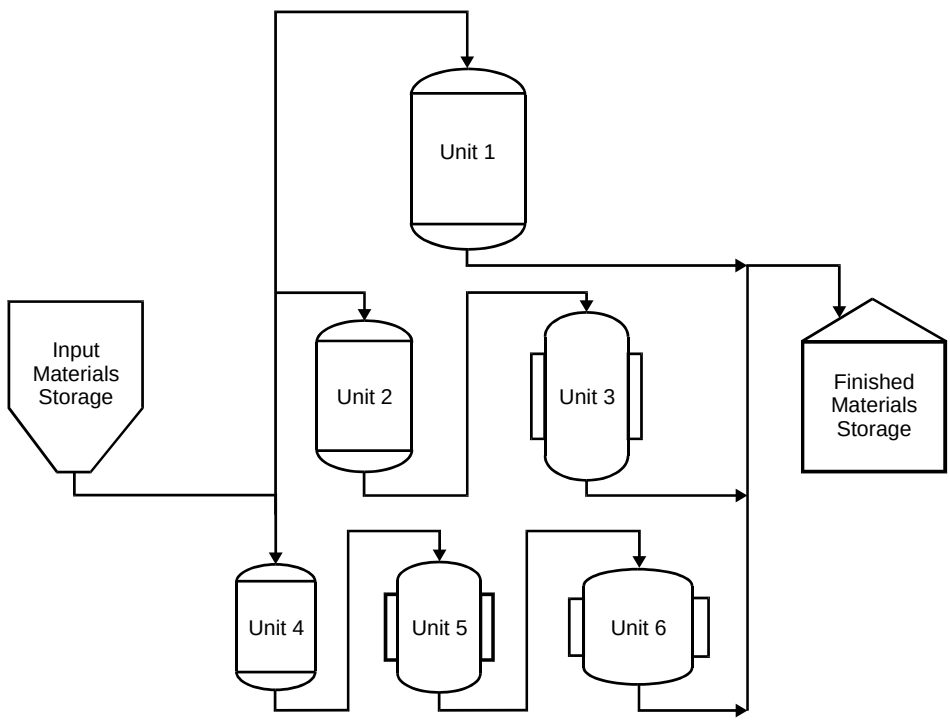

Figure 4 — Multiple-path structure

Documents
Document Sharing Hub
Full document details: ISA 88.01-1995 (2006)

A *network* structure is shown in Figure 5. The paths may be either fixed or variable. When the paths are fixed, the same units are used in the same sequence. When the path is variable, the sequence may be determined at the beginning of the batch or it may be determined as the batch is being produced. The path could also be totally flexible. For example, a batch would not have to start at either Unit 1 or Unit 3; it could start with any unit and take multiple paths through the process cell. The units themselves may be portable within the process cell. In this case, verification of the process connections may be an important part of the procedures. Note that several batches may be in production at the same time. The units may share raw material sources and product storage.

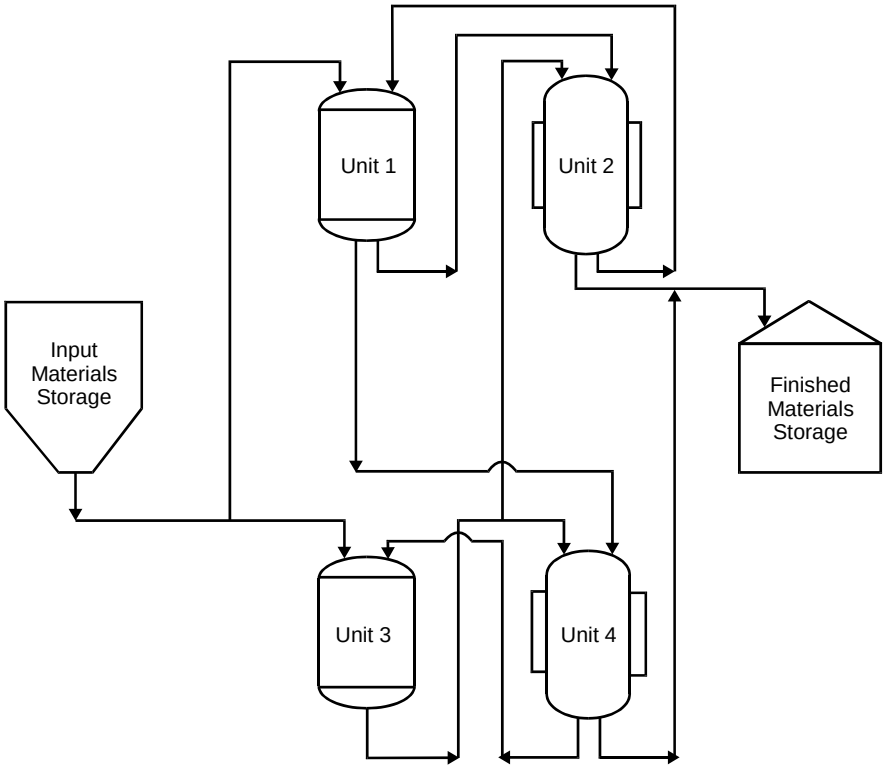

Figure 5 — Network structure

Documents
Document Sharing Hub
Full document details: ISA 88.01-1995 (2006)

5 Batch control concepts

This section discusses the batch control concepts needed to address the batch processing/batch manufacturing needs presented in the preceding section and to define a consistent way of operating a batch manufacturing plant. A structure for batch control is discussed that introduces three types of control needed for batch manufacturing. When these control types are applied to equipment, the resulting equipment entities provide process functionality and control capability.

The concept of recipes is discussed, including the four types of recipes described in this standard and the contents of these recipes (in terms of the information categories used to describe a recipe). A relationship is established between the procedure in a recipe and the control associated with specific equipment entities (equipment control). The concept of collapsibility of the recipe procedure and of equipment control is discussed. Recipe transportability criteria are introduced for the four types of recipes.

Production plans and schedules, reference information, production information, allocation and arbitration, modes and states, and exception handling are other batch control concepts discussed in this section.

The intent of the models and terminology introduced in this section is to establish the necessary batch control understanding so that the control functions that are needed to address the diverse control requirements of batch manufacturing can be discussed in Section 6.

5.1 Structure for batch control

Section 4 introduced a physical model that defined terms for the hierarchy of equipment typically found in a batch manufacturing environment. This section describes the three types of control (basic control, procedural control, and coordination control) typically needed in batch manufacturing.

5.1.1 Basic control

Basic control comprises the control dedicated to establishing and maintaining a specific state of equipment and process. Basic control

— includes regulatory control, interlocking, monitoring, exception handling, and repetitive discrete or sequential control;

— may respond to process conditions that could influence the control outputs or trigger corrective actions;

— may be activated, deactivated, or modified by operator commands or by procedural or coordination control.

Basic control in a batch environment is in principle no different from the control of continuous processes. However, in the batch environment, there may be higher requirements on the ability for basic control to receive commands and to modify its behavior based on these commands.

5.1.2 Procedural control

Procedural control directs equipment-oriented actions to take place in an ordered sequence in order to carry out a process-oriented task.

Documents
Document Sharing Hub

Full document details: ISA 88.01-1995 (2006)

Procedural control is a characteristic of batch processes. It is the control that enables equipment to perform a batch process.

Procedural control is made up of procedural elements that are combined in a hierarchical manner to accomplish the task of a complete process as defined by the process model. The hierarchy of identified and named procedural elements is illustrated in Figure 6 and consists of procedures, unit procedures, operations, and phases.

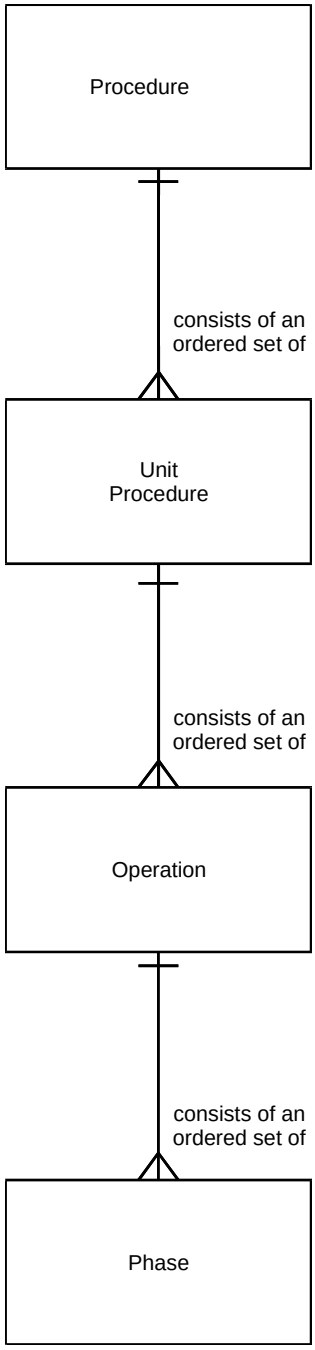

Figure 6 — Procedural control model

Documents
Document Sharing Hub
Full document details: ISA 88.01-1995 (2006)