RECOMMENDED PRACTICE

ISA–RP37.2–1982 (R1995)

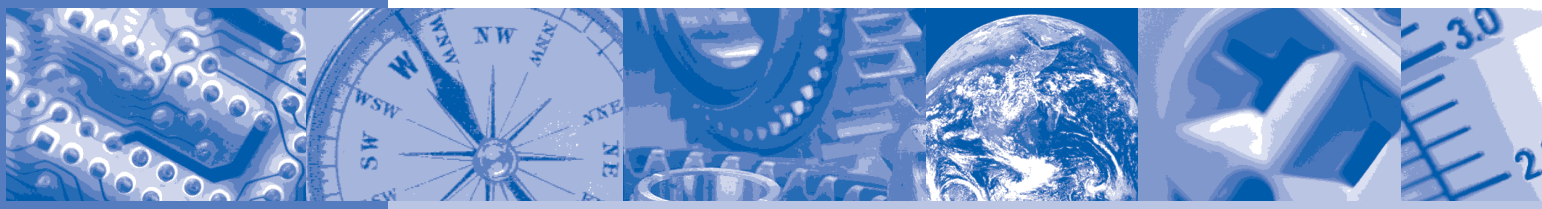

Guide for Specifications and Tests for Piezoelectric Acceleration Transducers for Aerospace Testing

Reaffirmed 29 September 1995

Documents
Document Sharing Hub

Full document details: ISA RP37.2-1982 (1995)

ISA–RP37.2–1982 (R1995)
Guide for Specifications and Tests for Piezoelectric Acceleration Transducers for Aerospace Testing

ISBN 0-87664-377-2

Copyright © 1982 by the Instrument Society of America. All rights reserved. Printed in the United States of America. No part of this publication may be reproduced, stored in a retrieval system, or transmitted in any form or by any means (electronic, mechanical, photocopying, recording, or otherwise), without the prior written permission of the publisher.

ISA
67 Alexander Drive
P.O. Box 12277
Research Triangle Park, North Carolina 27709

Documents
Document Sharing Hub

Full document details: ISA RP37.2-1982 (1995)

Preface

This preface, as well as all footnotes and annexes, is included for informational purposes and is not part of ISA-RP37.2-1982 (R1995).

This recommended practice has been prepared as a part of the service of ISA, the international society for measurement and control, toward a goal of uniformity in the field of instrumentation. To be of real value, this document should not be static, but should be subject to periodic review. Toward this end, the Society welcomes all comments and criticisms, and asks that they be addressed to the Secretary, Standards and Practices Board; ISA; 67 Alexander Drive; P.O. Box 12277; Research Triangle Park, NC 27709; Telephone (919) 549-8411; Fax: (919) 549-8288; E-mail: standards@isa.org.

The ISA Standards and Practices Department is aware of the growing need for attention to the metric system of units in general, and the International System of Units (SI) in particular, in the preparation of instrumentation standards, recommended practices, and technical reports. The Department is further aware of the benefits to USA users of ISA standards of incorporating suitable references to the SI (and the metric system) in their business and professional dealings with other countries. Toward this end, this Department will endeavor to introduce SI-acceptable metric units in all new and revised standards to the greatest extent possible. *The Metric Practice Guide*, which has been published by the Institute of Electrical and Electronics Engineers as ANSI/IEEE Std. 268-1992, and future revisions, will be the reference guide for definitions, symbols, abbreviations,and conversion factors.

CAUTION: The information presented within this ISA recommended practice is believed to be accurate and reflects the current state of knowledge within the field. The information is an interpretation and condensation of a larger volume of literature and experience, some of which is contradictory and speculative. Therefore, application of the information to particular situations requires the exercise of the independent professional judgment of the user. ISA is not responsible for any results from such use of the information and shall not be liable for any damages caused by such use.

It is the policy of ISA to encourage and welcome the participation of all concerned individuals and interests in the development of ISA standards, recommended practices, and technical reports. Participation in the ISA standards-making process by an individual in no way constitutes endorsement by the employer of that individual, of ISA, or of any of the standards, recommended practices, and technical reports that ISA develops.

The development of this recommended practice was initiated as a result of a survey conducted in December 1960. A total of 240 questionnaires was sent out to transducer users and manufacturers in the aerospace field. In their replies, a strong majority indicated a need for standardization of specifications and tests of several types of commonly used aerospace test transducers with electrical output.

On the basis of these replies, a Project Sub-Committee 8A-RP37.2, Guide for Piezoelectric Acceleration Transducers for Aerospace Testing, was formed under the cognizance of Committee 8A-RP37, Transducers for Aerospace Testing, of the Aerospace Standards Group, and this recommended practice was developed.

Documents
Document Sharing Hub

Full document details: ISA RP37.2-1982 (1995)

The following individuals served as members of Subcommittee 8A-RP37.2:

NAME	COMPANY
T. A. Perls, Chairman	Lockheed Missiles & Space Company
W. L. Vandal, Secretary	McDonnell Aircraft Corporation
W. Bradley, Jr.	Endevco Corporation
S. Edelman	National Bureau of Standards
E. J. Kirchman	NASA Goddard Space Flight Center
A. W. Orlacchio	Gulton Industries, Inc.

The following individuals served as members of Committee 8A-RP37 (SCOTFAST):

NAME	COMPANY
H. N. Norton, Chairman	General Dynamics/Astronautics
T. A. Perls, Vice-Chm.	Lockheed Missiles & Space Co.
A. A. Zuehlke, Secretary	Bourns, Inc.
R. M. Bernstein	Marketing Engineering Company
M. E. Binkley	Lockheed Missiles & Space Company
D. G. Egan	General Dynamics/Fort Worth
R. G. Jewell	General Electric Company
P. S. Lederer	National Bureau of Standards
O. L. Smith	Marshall Space Flight Center
F. K. Wemer	Rosemount Engineering Company

The following individuals served on the ISA Committee SP37, who reaffirmed ISA-RP37.2 in 1995:

NAME	COMPANY
E. Icayan, Chairman	Westinghouse Hanford Co.
J. Weiss	Electric Power Research Inst.
P. Bliss, Deceased	Consultant
M. Brigham	The Supply System
D. Hayes	LA Dept. Water & Power
M. Kopp	Validyne Corp.
C. Landis	Weed Fiber Optics
J. Miller	Rosemount Inc.
A. Mobley	3M Co.
J. Mock	Consultant
D. Norton	McDermott Energy Svces Inc.
H. Norton	Consultant
M. Tavares	Boeing Defense & Space Group
R. Whittier	Endevco
J. Wilson	Consultant

Documents
Document Sharing Hub

Full document details: ISA RP37.2-1982 (1995)

This recommended practice was reaffirmed by the ISA Standards and Practices Board on September 29, 1995.

NAME	COMPANY
M. Widmeyer, Vice President	Washington Public Power Supply System
H. Baumann	H. D. Baumann & Associates, Inc.
D. Bishop	Chevron USA Production Company
P. Brett	Honeywell, Inc.
W. Calder III	Foxboro Company
H. Dammeyer	Phoenix Industries, Inc.
R. Dieck	Pratt & Whitney
H. Hopkins	Utility Products of Arizona
A. Iverson	Lyondell Petrochemical Company
K. Lindner	Endress + Hauser GmbH + Company
T. McAvinew	Metro Wastewater Reclamation District
A. McCauley, Jr.	Chagrin Valley Controls, Inc.
G. McFarland	Honeywell Industrial Automation and Controls
J. Mock	Consultant
E. Montgomery	Fluor Daniel, Inc.
D. Rapley	Rapley Engineering Services
R. Reimer	Allen-Bradley Company
R. Webb	Pacific Gas & Electric Company
W. Weidman	Consultant
J. Weiss	Electric Power Research Institute
J. Whetstone	National Institute of Standards & Technology
C. Williams	Eastman Kodak Company
G. Wood	Graeme Wood Consulting
M. Zielinski	Fisher•Rosemount

Documents
Document Sharing Hub

Full document details: ISA RP37.2-1982 (1995)

Documents
Document Sharing Hub

Full document details: ISA RP37.2-1982 (1995)

Contents

1 Scope **9**

2 Purpose **9**

3 Drawing symbol **9**

3.1 General 9
3.2 Self-checking accelerometers 10

4 Characteristics **11**

4.1 Design characteristics 12
4.2 Performance characteristics 13
4.3 Additional terminology 14

5 Individual acceptance tests and calibration **16**

5.1 Visual inspection 16
5.2 Initial functional tests 16
5.3 Tests and measurements 18
5.4 Final functional tests 19

6 Qualification tests **20**

6.1 Effectiveness of mounting technique 20
6.2 Temperature range 21
6.3 Mounted resonant frequency 21
6.4 Frequency response, maximum range (see 5.2.1 and 5.2.2.) 22
6.5 Amplitude linearity 22
6.6 Strain sensitivity ..... 23 & 28
6.7 Temperature sensitivity error ..... 23 & 28
6.8 Transient temperature error ..... 23 & 28
6.9 Acoustic sensitivity ..... 23 & 28
6.10 Electromagnetic response ..... 24 & 28
6.11 Transducer seal immersion test (Use on all moisture sealed or hermetically sealed transducers) ..... 24 & 29
6.12 Other environmental effects ..... 24 & 29
6.13 Sensitivity stability ..... 24 & 29

Annex A — References **31**

Documents
Document Sharing Hub

Full document details: ISA RP37.2-1982 (1995)

Documents
Document Sharing Hub

Full document details: ISA RP37.2-1982 (1995)

1 Scope

1.1 This recommended practice covers piezoelectric acceleration transducers, primarily those used in aerospace test instrumentation.

1.2 Terminology used in this document follows ISA-S37.1, *Nomenclature and Specification Terminology for Aerospace Test Transducers with Electrical Output*, except that additional terms considered applicable to piezoelectric vibration transducers are defined in 4.3.

2 Purpose

This recommended practice establishes the following for piezoelectric acceleration transducers:

2.1 Uniform minimum general specifications for design and performance characteristics.

2.2 Uniform minimum acceptance and qualification test methods, including calibration.

2.3 Uniform presentation of minimum test data.

2.4 A drawing symbol for use in schematics.

3 Drawing symbol

3.1 General

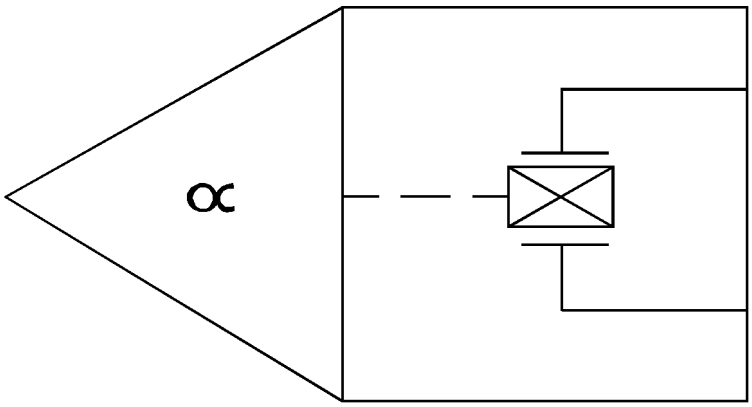

Documents
Document Sharing Hub

Full document details: ISA RP37.2-1982 (1995)

3.2 Self-checking accelerometers

3.2.1 Active

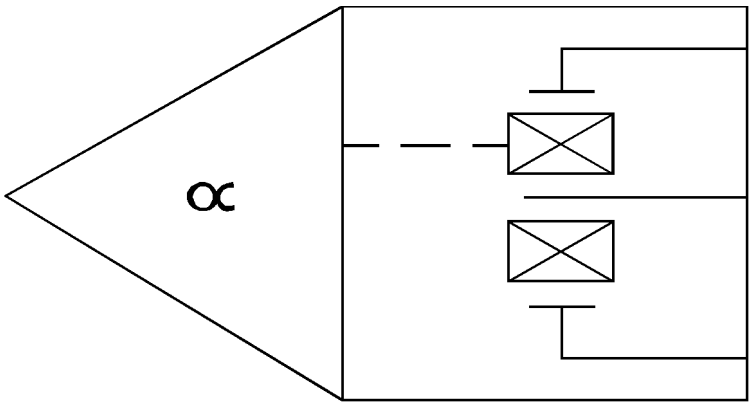

3.2.2 Passive

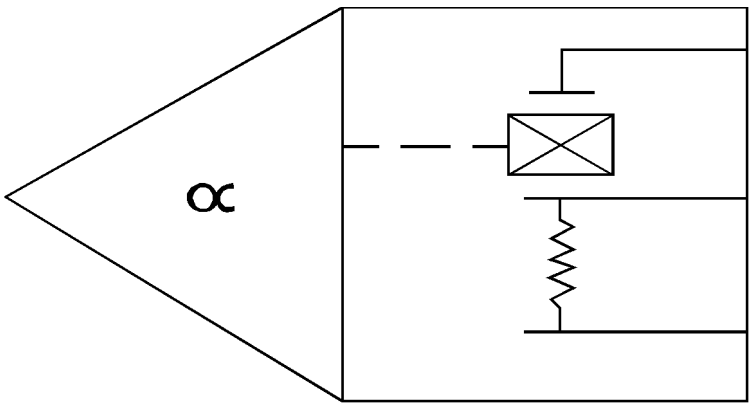

Documents
Document Sharing Hub

Full document details: ISA RP37.2-1982 (1995)

4 Characteristics

The first two paragraphs contain, in alphabetical order, the terms to be used in manufacturers' and users' specifications for piezoelectric acceleration transducers. Some terms not already defined in ISA-S37.1 (*Nomenclature and Specification Terminology for Aerospace Test Transducers with Electrical Output)* are marked with an asterisk (*) and are defined in 4.3.

In 4.1 and 4.2, each characteristic listed is checked (or numbered with reference to Sections 5 or 6) in one or several columns to indicate the characteristics which are included in manufacturers' literature or users' specifications as follows:

a) Basic — indicates characteristics which are normally specified for each transducer.

b) Supplemental — indicates additional characteristics which may be specified if desired.

The remaining three columns indicate the tests required to determine these characteristics.

a) Individual Acceptance Tests (IAT) — tests performed on each transducer.

   1) Within Stated Tolerances - these tests are of the "go - no go" type with respect to stated tolerances.

   2) Measured Value - these tests provide individual measured values of the characteristic.

b) Qualification tests — tests in addition to the IAT's performed on representative samples of each transducer design. All IAT's are, of course, performed during a formal qualification test program.

Some of the **basic** and **supplemental** characteristics are determined by the manufacturer's research and development and require no additional testing.

Documents
Document Sharing Hub

Full document details: ISA RP37.2-1982 (1995)