INTERNATIONAL STANDARD

ISO 12405-1

First edition
2011-08-15

Electrically propelled road vehicles — Test specification for lithium-ion traction battery packs and systems —

Part 1: High-power applications

Véhicules routiers à propulsion électrique — Spécifications d'essai pour packs et systèmes de batterie de traction aux ions lithium —

Partie 1: Applications à haute puissance

Reference number
ISO 12405-1:2011(E)

Documents
Document Sharing Hub
© ISO 2011

Full document details: ISO 12405-1-2011

COPYRIGHT PROTECTED DOCUMENT

© ISO 2011

All rights reserved. Unless otherwise specified, no part of this publication may be reproduced or utilized in any form or by any means, electronic or mechanical, including photocopying and microfilm, without permission in writing from either ISO at the address below or ISO's member body in the country of the requester.

ISO copyright office
Case postale 56 • CH-1211 Geneva 20
Tel. + 41 22 749 01 11
Fax + 41 22 749 09 47
E-mail copyright@iso.org
Web www.iso.org

Published in Switzerland

Documents
Document Sharing Hub

© ISO 2011 – All rights reserved

Full document details: ISO 12405-1-2011

Contents

Page

Foreword iv

Introduction v

1 Scope 1

2 Normative references 1

3 Terms and definitions 2

4 Symbols and abbreviated terms 4
4.1 Symbols 4
4.2 Abbreviated terms 5

5 General requirements 5
5.1 General conditions 5
5.2 Test sequence plan 6
5.3 Tests 6
5.4 Battery pack — Typical configuration 8
5.5 Battery system — Typical configuration 8
5.6 Preparation of battery pack and system for bench testing 11

6 General tests 11
6.1 Preconditioning cycles 11
6.2 Standard cycle 12

7 Performance tests 12
7.1 Energy and capacity at room temperature 12
7.2 Energy and capacity at different temperatures and discharge rates 14
7.3 Power and internal resistance 17
7.4 No-load SOC loss 22
7.5 SOC loss at storage 24
7.6 Cranking power at low temperature 26
7.7 Cranking power at high temperature 27
7.8 Energy efficiency 29
7.9 Cycle life 31

8 Reliability tests 38
8.1 Dewing — Temperature change 38
8.2 Thermal shock cycling 40
8.3 Vibration 40
8.4 Mechanical shock 45

9 Abuse tests 46
9.1 Information 46
9.2 Short-circuit protection 46
9.3 Overcharge protection 47
9.4 Overdischarge protection 48

Annex A (informative) Battery pack and system and overview on tests 49

Annex B (informative) Examples of data sheet for battery pack and system testing 53

Annex C (informative) Example of test conditions 57

Bibliography 58

© ISO 2011 – All rights reserved

Documents
Document Sharing Hub

Full document details: ISO 12405-1-2011

Foreword

ISO (the International Organization for Standardization) is a worldwide federation of national standards bodies (ISO member bodies). The work of preparing International Standards is normally carried out through ISO technical committees. Each member body interested in a subject for which a technical committee has been established has the right to be represented on that committee. International organizations, governmental and non-governmental, in liaison with ISO, also take part in the work. ISO collaborates closely with the International Electrotechnical Commission (IEC) on all matters of electrotechnical standardization.

International Standards are drafted in accordance with the rules given in the ISO/IEC Directives, Part 2.

The main task of technical committees is to prepare International Standards. Draft International Standards adopted by the technical committees are circulated to the member bodies for voting. Publication as an International Standard requires approval by at least 75 % of the member bodies casting a vote.

Attention is drawn to the possibility that some of the elements of this document may be the subject of patent rights. ISO shall not be held responsible for identifying any or all such patent rights.

ISO 12405-1 was prepared by Technical Committee ISO/TC 22, *Road vehicles*, Subcommittee SC 21, *Electrically propelled road vehicles*.

ISO 12405 consists of the following parts, under the general title *Electrically propelled road vehicles — Test specification for lithium-ion traction battery systems*:

— *Part 1: High-power applications*

— *Part 2: High-energy applications*

© ISO 2011 – All rights reserved

Documents
Document Sharing Hub
Full document details: ISO 12405-1-2011

Introduction

Lithium-ion-based battery systems are an efficient alternative energy storage system for electrically propelled vehicles. The requirements for lithium-ion based battery systems for use as a power source for the propulsion of electric road vehicles are significantly different from those batteries used for consumer electronics or stationary usage.

This part of ISO 12405 provides specific test procedures for lithium-ion battery packs and systems specially developed for propulsion of road vehicles. This part of ISO 12405 specifies such tests and related requirements to ensure that a battery pack or system is able to meet the specific needs of the automobile industry. It enables vehicle manufactures to choose test procedures to evaluate the characteristics of a battery pack or system for their specific requirements.

A coordination of test specifications for battery cells, packs and systems for automotive application is necessary for the practical usage of standards.

For specifications for battery cells, see IEC 62660-1 and IEC 62660-2.

Some tests as prescribed within this specification are based on existing specifications, i.e. *USABC, EUCAR, FreedomCAR* and other sources.

© ISO 2011 – All rights reserved

Documents
Document Sharing Hub
Full document details: ISO 12405-1-2011

Documents
Document Sharing Hub

Full document details: ISO 12405-1-2011

Electrically propelled road vehicles — Test specification for lithium-ion traction battery packs and systems —

Part 1:
High-power applications

1 Scope

This part of ISO 12405 specifies test procedures for lithium-ion battery packs and systems for use in electrically propelled road vehicles.

The specified test procedures enable the determination of the essential characteristics of performance, reliability and abuse of lithium-ion battery packs and systems. They assist the user of this part of ISO 12405 to compare the test results achieved for different battery packs or systems.

Therefore, this part of ISO 12405 specifies standard test procedures for basic characteristics of performance, reliability and abuse of lithium-ion battery packs and systems.

This part of ISO 12405 enables the setting up of a dedicated test plan for an individual battery pack or system subject to agreement between the customer and supplier. If required, the relevant test procedures and/or test conditions of lithium-ion battery packs and systems can be selected from the standard tests provided in this part of ISO 12405 to configure a dedicated test plan.

This part of ISO 12405 specifies tests for high-power battery packs and systems.

NOTE 1 Typical applications for high-power battery packs and systems are hybrid electric vehicles (HEVs) and fuel cell vehicles (FCVs).

NOTE 2 Testing on cell level is specified in IEC 62660-1 and IEC 62660-2.

2 Normative references

The following referenced documents are indispensable for the application of this document. For dated references, only the edition cited applies. For undated references, the latest edition of the referenced document (including any amendments) applies.

ISO 6469-1, *Electrically propelled road vehicles — Safety specifications — Part 1: On-board rechargeable energy storage system (RESS)*

ISO 6469-3, *Electrically propelled road vehicles — Safety specifications — Part 3: Protection of persons against electric shock*

ISO 16750-1, *Road vehicles — Environmental conditions and testing for electrical and electronic equipment — Part 1: General*

ISO 16750-3, *Road vehicles — Environmental conditions and testing for electrical and electronic equipment — Part 3: Mechanical loads*

© ISO 2011 – All rights reserved

Documents
Document Sharing Hub
Full document details: ISO 12405-1-2011

ISO 16750-4: *Road vehicles — Environmental conditions and testing for electrical and electronic equipment — Part 4: Climatic loads*

IEC 60068-2-30, *Environmental testing — Part 2-30: Tests — Test Db: Damp heat, cyclic (12 h + 12 h cycle)*

IEC 60068-2-47 *Environmental testing — Part 2-47: Test — Mounting of specimens for vibration, impact and similar dynamic tests*

IEC 60068-2-64:2008, *Environmental testing — Part 2-64: Tests — Test Fh: Vibration, broadband random and guidance*

3 Terms and definitions

For the purposes of this document, the following terms and definitions apply.

3.1
battery control unit
BCU
electronic device that controls, manages, detects or calculates electric and thermal functions of the battery system and that provides communication between the battery system and other vehicle controllers

NOTE See 5.5.1 for further explanation.

3.2
battery pack
energy storage device that includes cells or cell assemblies normally connected with cell electronics, voltage class B circuit and overcurrent shut-off device, including electrical interconnections, interfaces for external systems

NOTE 1 For further explanation, see 5.4 and A.2.

NOTE 2 Examples of external systems are cooling, voltage class B, auxiliary voltage class A and communication.

3.3
battery system
energy storage device that includes cells or cell assemblies or battery pack(s) as well as electrical circuits and electronics

NOTE 1 For further explanation, see 5.5.2, 5.5.3, A.3.1 and A.3.2. Battery system components can also be distributed in different devices within the vehicle.

NOTE 2 Examples of electronics are the BCU and contactors.

3.4
capacity
C
electrical charge that can be delivered from a battery pack or system under specified conditions

NOTE The capacity is often expressed in ampere-hours (A·h), where 1 A·h = 3 600 C.

3.5
cell electronics
electronic device that collects and possibly monitors thermal and electric data of cells or cell assemblies and contains electronics for cell balancing, if necessary

NOTE The cell electronics may include a cell controller. The functionality of cell balancing may be controlled by the cell electronics or by the BCU.

© ISO 2011 – All rights reserved
Documents
Document Sharing Hub
Full document details: ISO 12405-1-2011

3.6
customer
party that is interested in using the battery pack or system and, therefore, orders or performs the test

EXAMPLE A vehicle manufacturer.

3.7
energy density
amount of stored energy related to the battery pack or system volume

NOTE 1 The battery pack or system includes the cooling system, if any, to the point of a reversible attachment of the coolant lines or air ducts, respectively.

NOTE 2 Energy density is expressed in watt hours per litre (W·h/l).

3.8
energy round-trip efficiency
ratio of the net d.c. energy delivered by a DUT during a discharge test to the total d.c. energy required to restore the initial SOC by a standard charge

NOTE The net d.c. energy is expressed as watt hours (W·h) discharge and the total d.c. energy is expressed as watt hours (W·h) charge.

3.9
high-energy application
characteristic of device or application, for which the numerical ratio between maximum allowed electric power output and electric energy output at a 1 C discharge rate at room temperature for a battery pack or system is typically lower than 10

NOTE 1 Typically high-energy battery packs and systems are designs for applications in BEVs.

NOTE 2 The allowed electric power output is expressed as power in watts (W) and the electric energy output is expressed as energy in watt hours (W·h).

3.10
high-power application
characteristic of device or application, for which the numerical ratio between maximum allowed electric power output and electric energy output at a 1 C discharge rate at room temperature for a battery pack or system is typically equal to or higher than 10

NOTE 1 Typically high-power battery packs and systems are designs for applications in HEVs and FCVs.

NOTE 2 The allowed electric power output is expressed as power in watts (W) and the electric energy output is expressed as energy in watt hours (W·h).

3.11
maximum working voltage
highest value of a.c. voltage (r.m.s) or of d.c. voltage which may occur in an electrical system under any normal operating conditions according to the manufacturer's specifications, disregarding transients

3.12
rated capacity
supplier's specification of the total number of ampere hours that can be withdrawn from a fully charged battery pack or system for a specified set of test conditions, such as discharge rate, temperature and discharge cut-off voltage

3.13
room temperature
T_{room}
temperature of (25 ± 2) °C

© ISO 2011 – All rights reserved

Documents
Document Sharing Hub
Full document details: ISO 12405-1-2011

3.14
sign of battery current
discharge current is specified as positive and the charge current as negative

3.15
specific energy
amount of stored energy related to the battery pack or system mass

NOTE 1 The battery pack or system includes the cooling system, if any, to the point of a reversible attachment of the coolant lines or air ducts, respectively. For liquid-cooled systems, the coolant mass inside the battery pack or system is included.

NOTE 2 Specific energy is expressed in watt hours per kilogram (W·h/kg).

3.16
state of charge
SOC
available capacity in a battery pack or system

NOTE State of charge is expressed as a percentage of rated capacity.

3.17
supplier
party that provides battery systems and packs

EXAMPLE A battery manufacturer.

3.18
voltage class A
classification of an electric component or circuit with a maximum working voltage of ≤ 30 V a.c. or ≤ 60 V d.c., respectively

NOTE For more details, see ISO 6469-3.

3.19
voltage class B
classification of an electric component or circuit with a maximum working voltage of (> 30 and ≤ 1000) V a.c. or (> 60 and ≤ 1500) V d.c., respectively

NOTE For more details, see ISO 6469-3.

4 Symbols and abbreviated terms

4.1 Symbols

Symbol	Description	Unit
C_{fade}	Capacity fade	percentage
C_{rttx}	1 C (rated) capacity at current test	A·h
C_{rtt0}	Rated 1 C capacity at BOL	A·h
I_{charge}	Charge current	A
$I_{discharge}$	Discharge current	A
$I_{d,max}$	Maximum discharge current, specified by the manufacturer for energy and capacity testing	A
$I_{dp,max}$	Maximum discharge pulse current, specified by the manufacturer for power, internal resistance and energy efficiency testing	A

© ISO 2011 – All rights reserved
Documents
Document Sharing Hub
Full document details: ISO 12405-1-2011

T_{max}	Maximum operating temperature	°C
T_{min}	Minimum operating temperature	°C
T_{room}	Room temperature	°C
t	Time	s
η	Efficiency	%

4.2 Abbreviated terms

BOL	Beginning of life
DUT	Device under test
EODV	End of discharge voltage
EUCAR	European Council for Automotive Research and Development
IEC	International Electrotechnical Commission
ISO	International Organization for Standardization
OCV	Open circuit voltage
PNGV	Partnership for a New Generation of Vehicles
PSD	Power spectral density
RESS	Rechargeable energy storage system
r.m.s	root-mean-square
SC	Standard cycle
SCH	Standard charge
SDCH	Standard discharge
SOC	State of charge
USABC	United States Advanced Battery Consortium

5 General requirements

5.1 General conditions

5.1.1 Prerequisites

A battery pack or system tested in accordance with this part of ISO 12405 shall fulfil the following requirements.

— The electrical safety design shall be approved in accordance with the requirements given in ISO 6469-1 and ISO 6469-3.

— The necessary documentation for operation and required interface parts for connection to the test equipment (i.e. connectors, plugs, including cooling) shall be delivered together with the DUT.

A battery system shall enable the specified tests, i.e. via specified test modes implemented in the BCU, and shall be able to communicate with the test bench via common communication buses.

The battery pack subsystem as a DUT shall comprise all parts specified by the customer (e.g. including mechanical and electrical connecting points for mechanical test).

© ISO 2011 – All rights reserved

Documents
Document Sharing Hub
Full document details: ISO 12405-1-2011

If not otherwise specified, before each test, the DUT shall be equilibrated at the test temperature. The thermal equilibration is reached, if during a period of 1 h without active cooling, the deviations between test temperature and temperature of all cell temperature measuring points are lower than ±2 K.

If not otherwise specified, each charge and each SOC change shall be followed by a rest period of 30 min.

5.1.2 Accuracy of measurement equipment and measured values

The accuracy of external measurement equipment shall be at least within the following tolerances:

a) voltage ± 0,5 %;

b) current ± 0,5 %;

c) temperature ± 1 K.

The overall accuracy of externally controlled or measured values, relative to the specified or actual values, shall be at least within the following tolerances:

— voltage ± 1 %;

— current ± 1 %;

— temperature ± 2 K;

— time ± 0,1 %;

— mass ± 0,1 %;

— dimensions ± 0,1 %.

All values (time, temperature, current and voltage) shall be noted at least every 5 % of the estimated discharge and charge time, except if it is noted otherwise in the individual test procedure.

5.2 Test sequence plan

The test sequence for an individual battery pack or system, or a battery pack subsystem shall be based on agreement between the customer and supplier with consideration of tests in 5.3.

An example of a list of test conditions to be agreed between the customer and supplier is provided in Table C.1.

5.3 Tests

An overview of the tests is given in Figure 1, where the references to the specific subclauses are also given.

© ISO 2011 – All rights reserved
Documents
Document Sharing Hub
Full document details: ISO 12405-1-2011

Overview of tests

General tests (Clause 6)	Performance tests (Clause 7)	Reliability tests (Clause 8)	Abuse tests (Clause 9)
Preconditioning cycles (6.1)	Energy and capacity at RT (7.1)	Dewing (8.1)	Short-circuit protection (9.2)
Standard cycle (6.2)	Energy and capacity at different temperature and discharge rates (7.2)	Thermal shock cycling (8.2)	Overcharge protection (9.3)
Standard discharge (6.2.2.2)	Power and internal resistance (7.3)	Vibration (8.3)	Overdischarge protection (9.4)
Standard charge (6.2.2.3)	No load SOC loss (7.4)	Mechanical shock (8.4)	
	SOC loss at storage (7.5)		
	Cranking power at low temperature (7.6)		
	Cranking power at high temperature (7.7)		
	Energy efficiency (7.8)		
	Cycle life (7.9)		

Figure 1 — Test plan — Overview

© ISO 2011 – All rights reserved

Documents
Document Sharing Hub
Full document details: ISO 12405-1-2011

5.4 Battery pack — Typical configuration

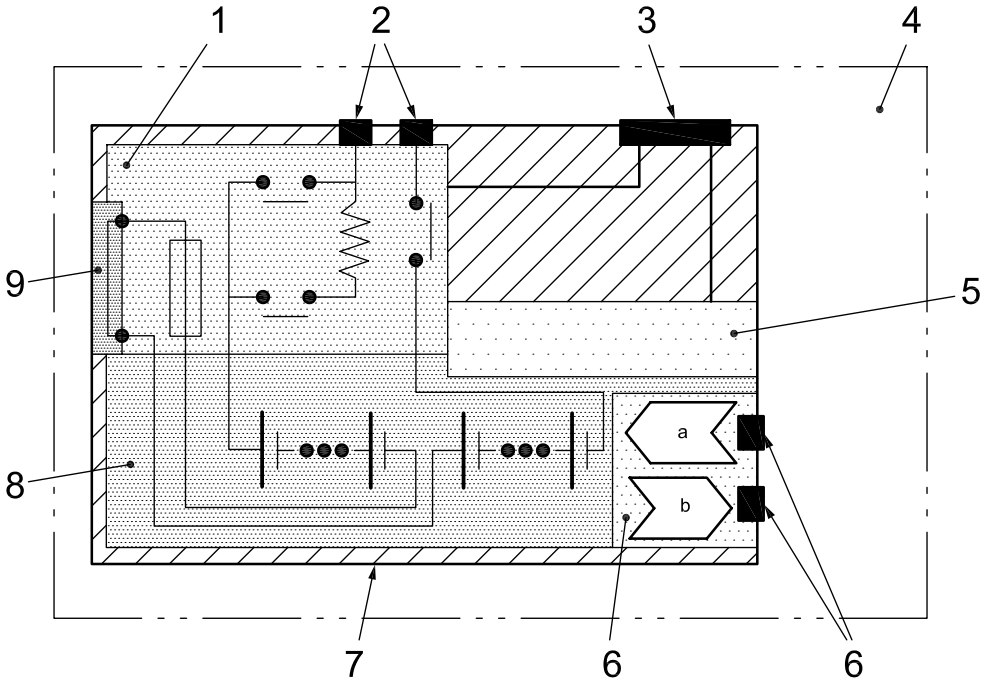

Key

1 voltage class B electric circuit (connectors, fuses, wiring)
2 voltage class B connections
3 voltage class A connections
4 battery pack
5 cell electronics
6 cooling device and connections (optional)
7 normal use impact-resistant case
8 cell assembly (cells, sensors, cooling equipment)
9 service disconnect

[a] In.
[b] Out.

Figure 2 — Typical configuration of battery pack

A battery pack represents an energy storage device, which includes cells or cell assemblies, cell electronics, voltage class B circuit and overcurrent shut-off device, including electrical interconnections, interfaces for cooling, voltage class B, auxiliary voltage class A and communication. The voltage class B circuit of the battery pack may include contactors and a manual shut-off function (service disconnect). All components are typically placed in a normal use impact-resistant case.

5.5 Battery system — Typical configuration

5.5.1 BCU

The BCU calculates SOC and state of health, and provides battery system operational limits to the vehicle management unit. The BCU may have direct access to the main contactors of the battery system in order to interrupt the voltage class B circuit under specified conditions, e.g. overcurrent, overvoltage, low voltage and high temperature. The BCU may vary in design and implementation; it may be a single electronic unit integrated into the battery system or it may be placed outside the battery pack and connected via a communication bus or input/output lines to the battery pack. The BCU functionalities may be integrated functions of one or more vehicle control units.

© ISO 2011 – All rights reserved
Documents
Document Sharing Hub
Full document details: ISO 12405-1-2011

5.5.2 Battery system with integrated BCU

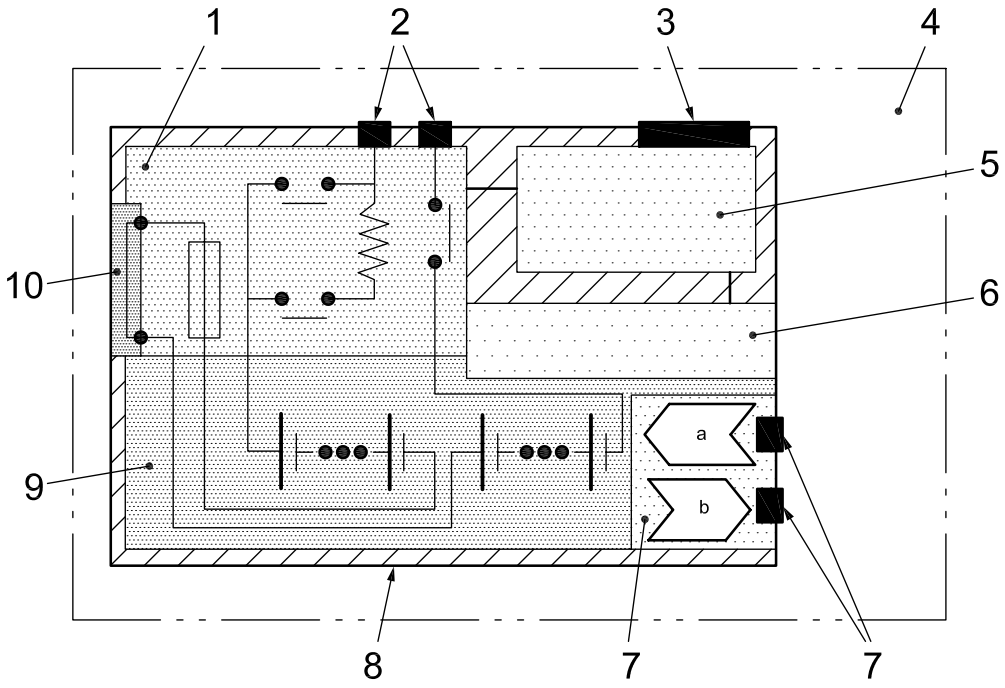

Key

1 voltage class B electric circuit (connectors, fuses, wiring)
2 voltage class B connections
3 voltage class A connections
4 battery system
5 BCU
6 cell electronics
7 cooling device and connections (optional)
8 normal use impact-resistant case
9 cell assembly (cells, sensors, cooling equipment)
10 service disconnect

[a] In.
[b] Out.

Figure 3 — Typical configuration of battery system with integrated BCU

A battery system represents an energy storage device, which includes cells or cell assemblies, cell electronics, a BCU, voltage class B circuit with contactors and overcurrent shut-off device, including electrical interconnections, interfaces for cooling, voltage class B, auxiliary voltage class A and communication. The voltage class B circuit may include a manual shut-off function (service disconnect). All components are typically placed in a normal use impact-resistant case. In this example, the BCU is integrated inside the normal use impact-resistant case and connected via its control functionalities to the battery pack.

© ISO 2011 – All rights reserved

Documents
Document Sharing Hub
Full document details: ISO 12405-1-2011

5.5.3 Battery system with external BCU

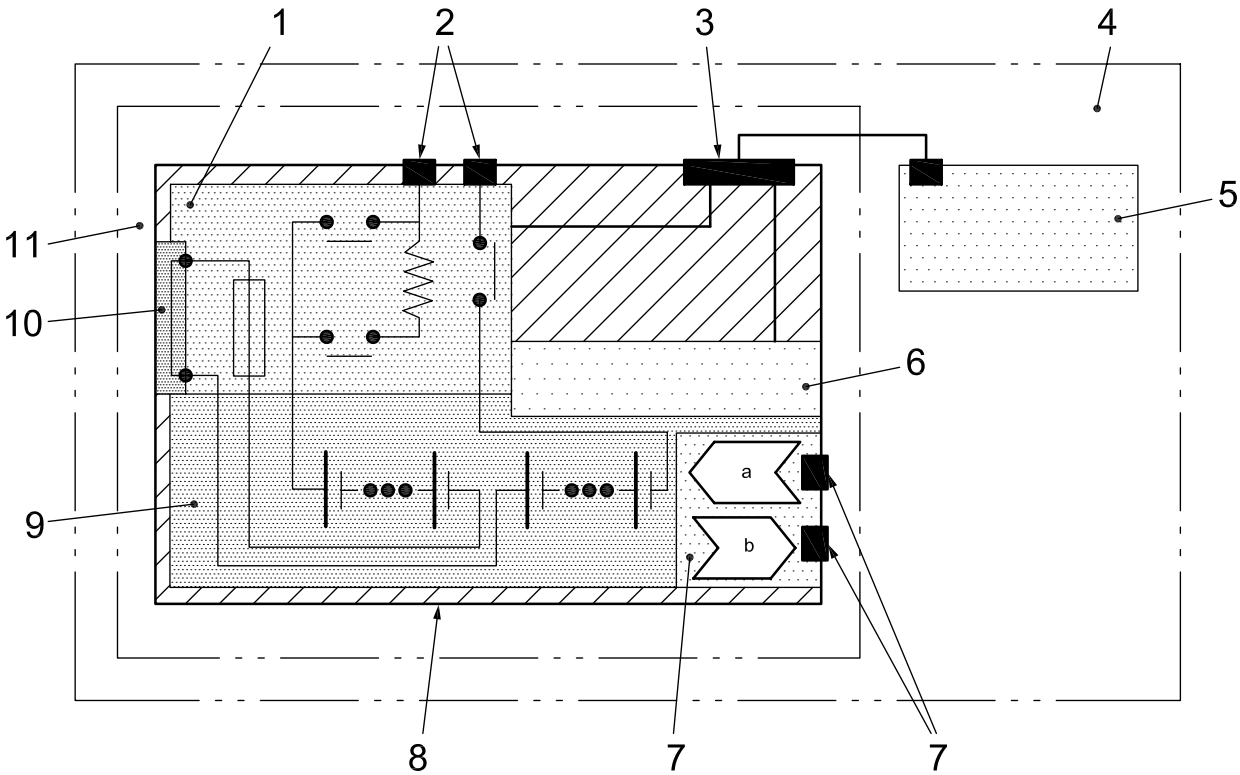

Key

1 voltage class B electric circuit (connectors, fuses, wiring)
2 voltage class B connections
3 voltage class A connections
4 battery system
5 BCU
6 cell electronics
7 cooling device and connections (optional)
8 normal use impact-resistant case
9 cell assembly (cells, sensors, cooling equipment)
10 service disconnect
11 battery pack

[a] In.
[b] Out.

Figure 4 — Typical configuration of battery system with external BCU

A battery system represents an energy storage device, which includes cells or cell assemblies, cell electronics, a BCU, voltage class B circuit with contactors and overcurrent shut-off device, including electrical interconnections, interfaces for cooling, voltage class B, auxiliary voltage class A and communication. The voltage class B circuit may include a manual shut-off function (service disconnect). All components are typically placed in a normal use impact-resistant case. In this example, the BCU is placed outside the normal use impact-resistant case and connected via its control functionalities to the battery pack.

© ISO 2011 – All rights reserved
Documents
Document Sharing Hub
Full document details: ISO 12405-1-2011

5.6 Preparation of battery pack and system for bench testing

5.6.1 Preparation of battery pack

If not otherwise specified, the battery pack shall be connected with voltage class B and voltage class A connections to the test bench equipment. Contactors, available voltage, current and temperature data shall be controlled according to the battery pack supplier's requirements and according to the test specification given by the test bench equipment. The passive overcurrent protection device shall be operational in the battery pack. Active overcurrent protection shall be maintained by the test bench equipment, if necessary, via disconnection of the battery pack main contactors. The cooling device may be connected to the test bench equipment and operated according to the supplier's requirements.

5.6.2 Preparation of battery system

If not otherwise specified, the battery system shall be connected with voltage class B, voltage class A and cooling connections to the test bench equipment. The battery system shall be controlled by the BCU, the test bench equipment shall follow the operational limits provided by the BCU via bus communication. The test bench equipment shall maintain the on/off requirements for the main contactors and the voltage, current and temperature profiles according to the requirements of the given test procedure. The battery system cooling device and the corresponding cooling loop at the test bench equipment shall be operational according to the controls by the BCU, unless otherwise specified in the given test procedure. The BCU shall enable the test bench equipment to perform the requested test procedure within the battery system operational limits. If necessary, the BCU programme shall be adapted by the supplier for the requested test procedure. The active and passive overcurrent protection device shall be operational by the battery system. Active overcurrent protection shall be maintained also by the test bench equipment, if necessary, via request of disconnection of the battery system main contactors.

6 General tests

6.1 Preconditioning cycles

6.1.1 Purpose

The DUT shall be conditioned by performing some electrical cycles before starting the real testing sequence, in order to ensure an adequate stabilization of the battery pack or system performance.

This test applies to battery packs and systems.

6.1.2 Test procedure

The procedure shall be the following.

— The test shall be performed at room temperature.

— The discharges shall be performed at 2 C or at a different current if suggested and/or used by the supplier in testing before delivery. The charging shall be performed according to the recommendations of the supplier.

— Five consecutive preconditioning cycles shall be performed. Fewer cycles may be agreed between the customer and supplier.

— At the end of discharge, the battery pack or system voltage shall not go below the minimum voltage recommended by the supplier. (The minimum voltage is the lowest voltage under discharge without irreversible damage.)

© ISO 2011 – All rights reserved

Documents
Document Sharing Hub
Full document details: ISO 12405-1-2011

— The battery pack or system shall be considered “preconditioned” if the discharged capacity during two consecutive discharges does not change by a value greater than 3 % of the rated capacity (30 min discharge or other discharge regime adopted during test according to battery supplier indications). If the discharge regime is equal to that used by the supplier on the same battery pack or system during factory tests, the data from the second cycle may be compared directly with the data from the supplier.

— If the precondition requirements cannot be fulfilled, the customer and supplier shall agree on further procedure.

NOTE The discharge rate of 2 C is used in order to shorten the preconditioning.

6.2 Standard cycle

6.2.1 Purpose

The purpose of the standard cycle (SC) is to ensure the same initial condition for each test of a battery pack or system. An SC, as described in 6.2.2.1, shall be performed prior to each test.

This test applies to battery packs and systems.

6.2.2 Test procedure

6.2.2.1 General

The SC shall be performed at T_{room}. The SC shall comprise an SDCH (see 6.2.2.2), followed by an SCH (see 6.2.2.3).

If, for any reason, the time interval between the end of the SC and the start of a new test is longer than 3 h, the SC shall be repeated.

6.2.2.2 Standard discharge

Discharge rate: 1 C or other specific discharge regime according to the specifications given by the supplier.

Discharge limit: according to the specifications given by the supplier.

Rest period after discharge to reach a stable condition: 30 min or a thermal equilibration at T_{room} of the DUT is reached.

6.2.2.3 Standard charge

Charge procedure and end of charge criteria: according to the specifications given by the supplier; the specifications shall cover end of charge criteria and time limits for the overall charging procedure.

Rest period after charge to reach a stable condition: 30 min.

7 Performance tests

7.1 Energy and capacity at room temperature

7.1.1 Purpose

This test measures DUT capacity in ampere hours (A·h), at constant current discharge rates corresponding to the supplier's rated 1 C capacity in ampere hours (A·h) (e.g., if the rated one-hour discharge capacity is 10 A·h, the discharge rate is 10 A). The one-hour rate (1 C) is used as reference for static capacity and energy

© ISO 2011 – All rights reserved
Documents
Document Sharing Hub
Full document details: ISO 12405-1-2011

measurement and as a standard rate for pack and system level testing. In addition, if applicable, the 10 C and the maximum permitted C rate shall be performed for capacity determination to meet the high-power system application requirements. Discharge is terminated on supplier-specified discharge voltage limits depending on discharge rates.

This test applies to battery packs and systems.

7.1.2 Test procedure

The test shall be performed at T_{room}, with the discharge rates of 1 C, 10 C and the maximum C rate as permitted by the supplier (the maximum C rate corresponds to $I_{d,max}$).

The test sequence shall be performed as specified in Table 1.

Table 1 — Test sequence energy and capacity test at room temperature

Step	Procedure	Test temperature
1.1	Thermal equilibration	T_{room}
1.2	Standard charge (SCH)	T_{room}
1.3	Standard cycle (SC)	T_{room}
2.1	Discharge at 1 C	T_{room}
2.2	Standard charge (SCH)	T_{room}
2.3	Discharge at 1 C	T_{room}
2.4	Standard charge (SCH)	T_{room}
2.5	Discharge at 10 C	T_{room}
2.6	Standard charge (SCH)	T_{room}
2.7	Discharge at 10 C	T_{room}
2.8	Standard charge (SCH)	T_{room}
2.9	Discharge at $I_{d,max}$	T_{room}
2.10	Standard charge (SCH)	T_{room}
2.11	Discharge at $I_{d,max}$	T_{room}
2.12	Standard charge (SCH)	T_{room}
3.1	Standard cycle (SC)	T_{room}

— The SCH procedure shall follow 6.2.2.3.

— The SC procedure shall follow 6.2.

— All discharge tests shall be terminated at the supplier's discharge voltage limits.

— After discharge, the DUT shall rest at least for 30 min or shall be thermally equilibrated at the required ambient temperature or a fixed time period shall be used to allow for thermal equilibration before starting the next step in the test sequence.

© ISO 2011 – All rights reserved

Documents
Document Sharing Hub
Full document details: ISO 12405-1-2011

7.1.3 Requirement

If the 1 C capacity obtained during testing at 7.1.2 step no. 2.3 differs more than 5 % from the supplier's 1 C specification, this measured 1 C capacity shall be used as rated capacity and shall be the basis value for all further discharge current requirements, i.e. the value for C in each discharge current calculation, nC, shall be based on the measured 1 C capacity.

The following data shall be reported:

— current, voltage, DUT temperature and ambient temperature versus time at each discharge test and the following standard charge;

— discharged capacity, in ampere hours (A·h); energy, in watt hours (W·h) and average power, in watts (W), at each discharge test;

— charged capacity, in ampere hours (A·h); energy, in watt hours (W·h) and average power, in watts (W), followed each discharge test;

— energy round-trip efficiency at each discharge test;

— discharged energy, in watt hours (W·h), as a function of SOC at each discharge test [in per cent (%) of rated capacity];

— EODV of all available cell voltage measuring points for all performed discharge tests;

— determined 1 C rated capacity which is taken as basic value for all further discharge current requirements.

NOTE Capacity data are also used for the later calculation of capacity fades (see 7.9.2.8).

7.2 Energy and capacity at different temperatures and discharge rates

7.2.1 Purpose

This test determines the capacity at different temperatures at three different constant current discharge rates. The different discharge rates shall be performed in a sequence before the ambient temperature is changed and the test shall be repeated after the new temperature is achieved.

This test applies to battery packs and systems.

7.2.2 Test procedure

The test shall be performed at three different temperatures (40 °C, 0 °C and −18 °C) with the discharge rates 1 C, 10 C and the maximum C rate as permitted by the supplier (the maximum C rate corresponds to $I_{d,max}$).

The test sequence shall be performed as specified in Table 2.

© ISO 2011 – All rights reserved
Documents
Document Sharing Hub
Full document details: ISO 12405-1-2011