INTERNATIONAL STANDARD

ISO 17751-2

Second edition
2023-08

Textiles — Quantitative analysis of cashmere, wool, other specialty animal fibres and their blends —

Part 2: Scanning electron microscopy method

Textiles — Analyse quantitative du cachemire, de la laine, d'autres fibres animales spéciales et de leurs mélanges —

Partie 2: Méthode par microscopie électronique à balayage

Reference number
ISO 17751-2:2023(E)

Documents
Document Sharing Hub
© ISO 2023

Full document details: ISO 17751-2-2023

COPYRIGHT PROTECTED DOCUMENT

© ISO 2023

All rights reserved. Unless otherwise specified, or required in the context of its implementation, no part of this publication may be reproduced or utilized otherwise in any form or by any means, electronic or mechanical, including photocopying, or posting on the internet or an intranet, without prior written permission. Permission can be requested from either ISO at the address below or ISO's member body in the country of the requester.

ISO copyright office
CP 401 • Ch. de Blandonnet 8
CH-1214 Vernier, Geneva
Phone: +41 22 749 01 11
Email: copyright@iso.org
Website: www.iso.org

Published in Switzerland

© ISO 2023 – All rights reserved

Documents
Document Sharing Hub

Full document details: ISO 17751-2-2023

Contents

Page

Foreword ... **iv**
Introduction ... **vi**
1 Scope ... **1**
2 Normative references ... **1**
3 Terms and definitions ... **1**
4 Principle ... **3**
5 Reagents and materials ... **3**
6 Apparatus ... **3**
7 Sampling ... **3**
8 Preparation of test specimens ... **4**
8.1 Number of test specimens ... 4
8.2 Preparation method for test specimens ... 4
8.2.1 Loose fibre ... 4
8.2.2 Sliver ... 5
8.2.3 Yarn ... 5
8.2.4 Woven fabrics ... 5
8.2.5 Knitted fabrics ... 6
8.3 Coating of the test specimens ... 6
9 Procedure ... **6**
9.1 General ... 6
9.2 Preparation and test on test specimen stubs ... 6
9.3 Qualitative analysis (purity analysis) ... 6
9.4 Quantitative analysis ... 6
10 Calculation and expression of test result ... **7**
10.1 Calculation of test result ... 7
10.2 Expression of test result ... 7
11 Test report ... **8**
Annex A (normative) **Drawing of the lot sample and the laboratory sample** ... **9**
Annex B (informative) **Surface morphology of common animal fibres** ... **10**
Annex C (normative) **Density of common animal fibres** ... **52**
Bibliography ... **53**

© ISO 2023 – All rights reserved

Documents
Document Sharing Hub
Full document details: ISO 17751-2-2023

Foreword

ISO (the International Organization for Standardization) is a worldwide federation of national standards bodies (ISO member bodies). The work of preparing International Standards is normally carried out through ISO technical committees. Each member body interested in a subject for which a technical committee has been established has the right to be represented on that committee. International organizations, governmental and non-governmental, in liaison with ISO, also take part in the work. ISO collaborates closely with the International Electrotechnical Commission (IEC) on all matters of electrotechnical standardization.

The procedures used to develop this document and those intended for its further maintenance are described in the ISO/IEC Directives, Part 1. In particular, the different approval criteria needed for the different types of ISO document should be noted. This document was drafted in accordance with the editorial rules of the ISO/IEC Directives, Part 2 (see www.iso.org/directives).

ISO draws attention to the possibility that the implementation of this document may involve the use of (a) patent(s). ISO takes no position concerning the evidence, validity or applicability of any claimed patent rights in respect thereof. As of the date of publication of this document, ISO had not received notice of (a) patent(s) which may be required to implement this document. However, implementers are cautioned that this may not represent the latest information, which may be obtained from the patent database available at www.iso.org/patents. ISO shall not be held responsible for identifying any or all such patent rights.

Any trade name used in this document is information given for the convenience of users and does not constitute an endorsement.

For an explanation of the voluntary nature of standards, the meaning of ISO specific terms and expressions related to conformity assessment, as well as information about ISO's adherence to the World Trade Organization (WTO) principles in the Technical Barriers to Trade (TBT), see www.iso.org/iso/foreword.html.

This document was prepared by Technical Committee ISO/TC 38, *Textiles,* in collaboration with the European Committee for Standardization (CEN) Technical Committee CEN/TC 248, *Textile and textile products,* in accordance with the Agreement on technical cooperation between ISO and CEN (Vienna Agreement).

This second edition cancels and replaces the first edition (ISO 17751-2:2016), which has been technically revised.

The main changes are as follows:

— in 3.1, a note to different types of speciality animal fibres has been added;

— in 3.6, a note to entry and a new Figure 1 have been added to indicate the distal edge, and subsequent figures have been renumbered;

— a new term, 3.11 warping angle, has been added;

— a new Clause 5 titled “reagents and materials” and its content has been separated from former clause;

— a new Clause 6 titled “Apparatus” has been added and its contents have been renumbered, subsequent clause and subclause numbers are changed accordingly;

— Clause 7 retitled “Sampling” has been added and its content has been rephrased to match with the property adjustment of Annex A;

— in 8.1, the numbers of test specimen sets and test specimen stubs have been increased;

— the title of 8.2 (former 6.2) has been changed from “Preparation method for test specimens of various types of samples” to “Preparation method for test specimens”;

© ISO 2023 – All rights reserved
Documents
Document Sharing Hub
Full document details: ISO 17751-2-2023

— in 8.2.4.1, missing information on marking of masses of warp and weft yarns and laboratory sample has been supplemented;

— the title of Clause 9 has been changed to “Procedure”;

— 9.1 titled “General” and its content has been added;

— the title of 9.2 has been changed from “Test on each test specimen stub” to “Preparation and test on test specimen stubs”;

— the title of 9.3 has been changed from “Qualitative analysis (Purity analysis) and determination of fibre content” to “Qualitative analysis (Purity analysis)”;

— 9.4 titled “Quantitative analysis” has been added, number of fibre snippets to be examined and measured are changed due to the change of number of test specimen stubs;

— the title of Clause 10 has been changed from “Calculation of test result” to “Calculation and expression of test result”;

— 10.1 “Calculation of test result” has been added;

— 10.2 “Expression of test result” has been added;

— Clause 11 titled “Test report” and its contents have been added;

— the status of Annex A has been changed from informative to normative;

— in Annex C, density of some fibres has been modified and the density of coarse rabbit has been added;

— in Annex C, a table footnote has been added to coarse angora or rabbit;

— two references have been added in the bibliography.

A list of all parts in the ISO 17751 series can be found on the ISO website.

Any feedback or questions on this document should be directed to the user’s national standards body. A complete listing of these bodies can be found at www.iso.org/members.html.

© ISO 2023 – All rights reserved

Documents
Document Sharing Hub
Full document details: ISO 17751-2-2023

Introduction

Cashmere is a high value speciality animal fibre, but cashmere and other animal wool fibres such as sheep's wool, yak, camel, etc., exhibit great similarities in their physical and chemical properties, so that their fibre blends are difficult to distinguish from each other by both mechanical and chemical methods. In addition, these fibres show similar scale structures. It is very difficult to accurately determine the fibre content of such fibre blends by current testing means.

Research on the accurate identification of cashmere fibres has been a long undertaking. At present, the most widely used and reliable techniques include the light microscopy (LM) method and the scanning electron microscopy (SEM) method.

— The advantage of LM method is that the internal medullation and pigmentation of fibres can be observed; the disadvantage is that some subtle surface structures cannot be clearly displayed. A decolouring process needs to be carried out on dark samples for testing, while improper decolouring process can affect the judgment of fibre analyst.

— The SEM method shows complementary characteristics to those of LM method, so some types of fibres need to be identified by scanning electron microscope.

The LM and SEM methods need be used together to identify some difficult-to-identify samples in order to utilize the advantages of both methods.

It has been proven in practice that the accuracy of a fibre analysis is highly related to the ample experience, full understanding, and extreme familiarity of the fibre analyst to the surface morphology of various types of animal fibres. In addition to textual descriptions, micrographs of different types of animal fibres are given in Annex B.

© ISO 2023 – All rights reserved
Documents
Document Sharing Hub
Full document details: ISO 17751-2-2023

Textiles — Quantitative analysis of cashmere, wool, other specialty animal fibres and their blends —

Part 2: Scanning electron microscopy method

1 Scope

This document specifies a method for the identification, qualitative, and quantitative analysis of cashmere, wool, other speciality animal fibres, and their blends using scanning electron microscopy (SEM).

It is applicable to loose fibres, intermediate products, and final products of cashmere, wool, other speciality animal fibres, and their blends.

2 Normative references

There are no normative references in this document.

3 Terms and definitions

For the purposes of this document, the following terms and definitions apply.

ISO and IEC maintain terminology databases for use in standardization at the following addresses:

— ISO Online browsing platform: available at https://www.iso.org/obp

— IEC Electropedia: available at https://www.electropedia.org/

3.1
speciality animal fibre
any type of keratin fibre taken from speciality animals (hairs) other than sheep

Note 1 to entry: Speciality animal fibres include cashmere, camel, yak, mohair, angora or rabbit, alpaca, etc.

3.2
scanning electron microscope
intermediate type of microscopic morphology observation instrument between transmitted electron microscope and light microscope which use a focused beam of high-energy electrons to generate a variety of physical information signals

Note 1 to entry: The principle consists of scanning a primary focused electron beam over a whole area of interest on the surface of solid test specimen, and the signal derived from which is then received, amplified and displayed in images for full observation of surface area topography of the test specimen.

Note 2 to entry: The signals obtained by a scanning electron microscope are, e.g. secondary electrons, Auger electrons, characteristic X-ray, etc.

© ISO 2023 – All rights reserved

Documents
Document Sharing Hub
Full document details: ISO 17751-2-2023

3.3
secondary electron
low-energy extra-nuclear electron released from and by ionization of a metal atom in the 5 nm to 10 nm scanned region of metal layer less than 10 nm thick nearest to the outermost meta-coated surface of a *test specimen* (3.10) under impact of the focused primary electron beam of energy in units of tens of keV

Note 1 to entry: Being surface sensitive because of the small mean free path of the electron to escape from deep within the test specimen and, therefore the signal of which produces the highest-resolution morphological images of the coated surface.

3.4
scale
cuticle covering the surface of animal fibres

3.5
scale frequency
number of *scales* (3.4) along the fibre axis per unit length

3.6
scale height
height of the cuticle at the *scale's* (3.4) distal edge

Note 1 to entry: The distal edge is shown in Figure 1.

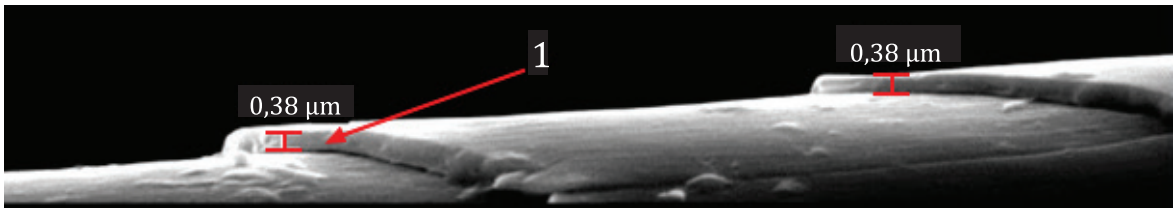

Key
1 distal edge

Figure 1 — Distal edge

3.7
fibre surface morphology
sum of the physical properties/attributes characterizing the fibre surface

Note 1 to entry: The fibre surface morphology includes scale frequency, scale height, patterns of scale edge, scale surface smoothness, fibre evenness along its axis, transparency under light microscope etc.

3.8
lot sample
portion representative of the same type and same lot of material drawn according to the requirements from which it is taken

3.9
laboratory sample
portion drawn from a *lot sample* (3.8) according to the requirements to prepare *test specimens* (3.10)

3.10
test specimen
portion taken from fibre snippets randomly cut from a *laboratory sample* (3.9) for measurement purposes

3.11
warping angle
angle of the free edge of the *scale* (3.4) deviating from the parallel edges of the fibre

© ISO 2023 – All rights reserved
Documents
Document Sharing Hub
Full document details: ISO 17751-2-2023

4 Principle

A longitudinal view image of fibre snippets representative of a test specimen coated with a thin layer of gold and/or other metals is produced by a scanning electron microscope through scanning the side surface of the test specimen with a focused incident beam of high-energy electrons, detecting signals of secondary electrons emitted by the gold atoms excited when hit by the incident electron beam, and combining the beam position with the detected signals which contain information on surface topography of the test specimen.

All fibre types found in the test specimen are identified by comparing them with known fibre surface morphologies for different types of animal fibres.

For each fibre type, the number and diameter of fibre snippets are counted and measured. The mass fraction is calculated from the data for the number of fibre snippets counted, mean value, and standard deviation of the snippet diameter and the true density of each fibre type.

5 Reagents and materials

5.1 **Acetone**, analytical grade.

5.2 **Ethyl acetate**, analytical grade.

5.3 **Double-sided adhesive tape**.

6 Apparatus

6.1 **Scanning electron microscope**, comprised of a vacuum system, electronic optical system, signal collecting and imaging system, display system, and measurement software.

6.2 **Sputter coater,** with a gold and/or other metal cathode.

6.3 **Microtome and razor blade, scalpel or double blades**.

6.4 **Glass plate**, measuring approximately 150 mm × 150 mm.

6.5 **Tweezers**, **scissors**.

6.6 **Test specimen stub**, aluminium or brass, 13 mm in diameter.

6.7 **Glass tube**, 10 mm to 15 mm in diameter.

6.8 **Stainless-steel rod**, approximately 1 mm in diameter.

7 Sampling

Lot samples and laboratory samples shall be drawn in accordance with the sampling methods described in Annex A.

© ISO 2023 – All rights reserved

Documents
Document Sharing Hub
Full document details: ISO 17751-2-2023

8 Preparation of test specimens

8.1 Number of test specimens

One single set of test specimens is composed by 3 test specimen stubs and at least 600 fibres.

Prepare two sets of test specimens, each comprising 3 stubs, i.e. 6 test specimen stubs in total. Fibre snippets on a single set of test specimen stubs shall be sufficient to ensure at least 600 fibre snippets can be examined, for a total of 1 200 fibres (on 6 stubs) on two sets, whatever the number of operators.

In case of discrepancy on the test results between the two sets, a third set of test specimens (3 stubs and 600 fibres) shall be prepared and tested.

8.2 Preparation method for test specimens

8.2.1 Loose fibre

8.2.1.1 Put the laboratory sample flat on the test table, pick up approximately 500 mg of fibres randomly on not less than 20 spots with tweezers from the top and bottom sides of the sample. Blend them homogeneously and divide them into 3 equal portions. Sort these drawn fibres into basically parallel fibre bundles.

8.2.1.2 Cut each bundle in the middle with a microtome and razor blade, scalpel or double blades to get approximately 0,4 mm long fibre snippets. Cut only once in each of the fibre bundles.

8.2.1.3 Collect all fibre snippets in the glass tube and suspend them in 1 ml to 2 ml acetone or ethyl acetate by stirring the mixture with a stainless-steel rod. Pour the suspension onto a glass plate to ensure that the fibre snippets are uniformly distributed on a spot of approximately 10 cm in diameter on the glass plate, as shown in Figure 1.

8.2.1.4 Press the double-sided adhesive tape on the mounting stubs and use a razor blade to trim the adhesive tape away from around the mounting stubs. After all the acetone or ethyl acetate in the fibre snippets suspension has evaporated, press the mounting stubs with the adhesive tape end onto the glass plate at the positions shown in Figure 2. Transfer the uniformly mixed fibre snippets to the adhesive tape on the test specimen stub.

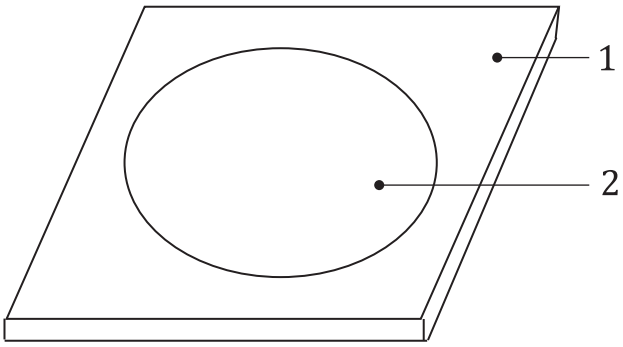

Key

1 glass plate

2 fibre suspension

Figure 2 — Fibre suspension on glass plate

© ISO 2023 – All rights reserved
Documents
Document Sharing Hub
Full document details: ISO 17751-2-2023

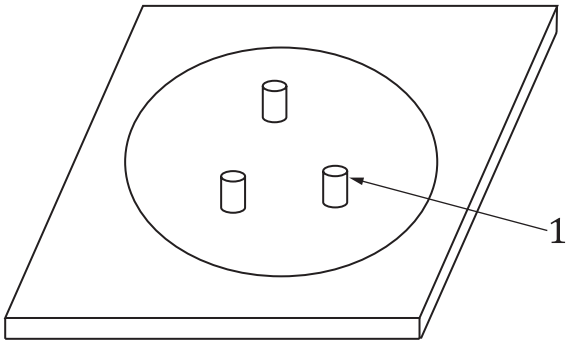

Key

1 test specimen stub

Figure 3 — Positions of a single set of the three test specimen stubs

8.2.1.5 If the fibre snippets have aggregated after the evaporation of the acetone or ethyl acetate, they shall be recollected by scraping them off the glass plate with a razor blade and repeat operation procedures 8.2.1.3 and 8.2.1.4.

8.2.2 Sliver

8.2.2.1 Cut the laboratory sliver sample into three sections. Take out an appropriate amount of the fibre bundle in the longitudinal direction from each sliver section.

8.2.2.2 Cut in the middle of each fibre bundle to obtain approximately 0,4 mm long fibre snippets with a microtome and razor blade, scalpel or double blades. Cut only once in each fibre bundle.

8.2.2.3 Other operation procedures are the same as described in 8.2.1.3 to 8.2.1.5.

8.2.3 Yarn

8.2.3.1 Divide the laboratory sample into three equal portions.

8.2.3.2 Cut each portion in the middle with a microtome and razor blade, scalpel or double blades to obtain approximately 0,4 mm long fibre snippets. Cut only once in each yarn portion.

8.2.3.3 Other operation procedures are the same as described in 8.2.1.3 to 8.2.1.5.

8.2.4 Woven fabrics

8.2.4.1 If the warp and weft yarn share the same composition, all yarn segments unravelled from a rectangular sample of a complete pattern may be cut to obtain an appropriate test specimen. For those fabric samples composed of different compositions of warp and weft yarns, unravel the warp and weft yarns separately, weigh them and record their masses as m_T and m_W, respectively. If the fabrics have a definite repetition in the pattern, unravel at least the integral multiple of a complete pattern. The unravelled warp and weft yarn bundles are kept as warp and weft yarn samples, respectively, as the laboratory sample.

8.2.4.2 Cut once from the parallel yarn portion in the middle with a microtome and razor blade, scalpel or double blades to obtain approximately 0,4 mm long fibre snippets. Cut only once in each yarn segments.

© ISO 2023 – All rights reserved

Documents
Document Sharing Hub
Full document details: ISO 17751-2-2023

8.2.4.3 Other operation procedures are the same as described in 8.2.1.3 to 8.2.1.5.

8.2.5 Knitted fabrics

8.2.5.1 Unravel at least 25 yarn segments from the laboratory sample for woollen knitted fabrics. Unravel at least 50 yarn segments for worsted knitted fabrics. Cut each yarn portion in the middle to obtain approximately 0,4 mm long fibre snippets. Cut only once in each yarn portion.

8.2.5.2 Other operation procedures are the same as described in 8.2.1.3 to 8.2.1.5.

8.3 Coating of the test specimens

Use the sputter coater to apply a thin layer of gold and/or other metals to the test specimen on test specimen stub.

9 Procedure

9.1 General

When possible, the analysis of the test specimens should be carried out independently by two operators.

9.2 Preparation and test on test specimen stubs

9.2.1 Place a stub with the test specimen into the test chamber of the SEM. First, view the selected stub at a lower magnification (for example, at 10×). Then, selecting from an area near the upper left edge of the stub on the monitor, set the magnification to 1 000×, scan the stub and observe the fibres. The fibre types may be identified according to characteristics of the fibre morphologies (see details in Annex B) of cashmere, sheep's wool and other animal fibres.

9.2.2 Return to the lower magnification after identifying all fibres in the selected area. Choose another observation area along vertical or horizontal direction, repeat 9.2.1 operation until finished, scanning the entire stub before continuing to analyse fibre snippets on another stub.

9.3 Qualitative analysis (purity analysis)

Examine 200 fibres on the first test specimen stub of the first set of test specimens. The following three conditions can happen.

— Case 1: If only one fibre type is found, examine another 200 fibre snippets on the first test specimen stub of the second set of test specimens. If no fibre of a second type is found, the sample is declared as pure.

— Case 2: If two fibre types are found and the amount of one type is lower than 3 % by number (less than 6 fibres of the second type), it is considered as a minor component. Examine 200 further snippets from the first test specimen stub of the second set of test specimens and calculate the percentage by number of the two types of fibres.

— Case 3: If two or more fibre types are found and the fibre mixture is considered to be a blend, perform a quantitative analysis according to 9.4.

9.4 Quantitative analysis

If the sample is found to be a blend, examine 200 further fibres and measure the diameters of the first 25 fibres of each component identified (or all fibres of that component, if less than 25) on each of the remaining stubs of the first set of test specimens. At least a total of 600 fibres shall be identified for a

© ISO 2023 – All rights reserved
Documents
Document Sharing Hub
Full document details: ISO 17751-2-2023

sample and 50 measurements of fibre diameter are made for each component. The mean fibre diameter of each component is calculated according to diameters measured for the 50 fibres. If the total amount of each component is less than 50, calculate the mean fibre diameter according to the actual number of that fibre component.

Repeat the procedure on the second set of test specimens for a total of 1 200 fibres and 100 measurements of fibre diameter.

This diameter is measured in vacuum condition and is not comparable to diameter measured by other instruments. Therefore, the value shall only be used for calculation of fibre content of each component in Clause 10.

10 Calculation and expression of test result

10.1 Calculation of test result

10.1.1 Calculate the mass fraction of each component with Formula (1) for each set of test specimens. Density of various types of animal fibres shall be as specified in Annex C.

$$w_i = \frac{N_i\left(D_i^2 + S_i^2\right)\rho_i}{\Sigma\left[N_i\left((D_i^2 + S_i^2)\rho_i\right)\right]} \times 100 \tag{1}$$

where

w_i is the mass fraction of the component, %;

N_i is the number of fibres counted for the component;

S_i is the standard deviation of mean fibre diameter of the component, in micrometres (µm);

D_i is the mean fibre diameter of the component, in micrometres (µm);

ρ_i is the density of the component, in grams per cubic centimetre (g/cm^3).

10.1.2 Calculate the mass fraction of a fibre component in woven fabric samples composed of different warp and weft yarn compositions with Formula (2) for each set of test specimens.

$$w_i = \frac{w_{iT} \times m_T + w_{iW} \times m_W}{m_T + m_W} \times 100 \tag{2}$$

where

w_i is the mass fraction of the component in woven fabric sample, %;

w_{iT} is the mass fraction of the component in the warp yarns of the woven fabric sample, %;

m_T is the mass of the warp yarns in the woven fabric sample, in grams (g);

w_{iW} is the mass fraction of the component in the weft yarns of the woven fabric sample, %;

m_W is the mass of the weft yarns in the woven fabric sample, in grams (g).

10.2 Expression of test result

Take the mean value of calculations of the two sets of test specimens as the test result. If the difference between the two sets of test specimen is larger than 3,0 %, a third set of test specimens shall be tested. In such a case, the mean value of the three test results is taken as the test result. Fibre content

© ISO 2023 – All rights reserved

AVA Documents Document Sharing Hub
Full document details: ISO 17751-2-2023

percentage of angora or rabbit is the sum of percentages of both coarse and normal angora or rabbit hairs.

Test result of fibre content is rounded to one decimal.

11 Test report

Test report shall at least include the following information:

a) sample description;

b) a reference to this document, i.e. ISO 17751-2:2023;

c) test results;

d) any deviations from the procedure;

e) any unusual features observed;

f) the date of the test.

© ISO 2023 – All rights reserved
Documents
Document Sharing Hub
Full document details: ISO 17751-2-2023

Annex A
(normative)

Drawing of the lot sample and the laboratory sample

A.1 Loose fibre

Fifty percent of the total number of packages shall be sampled. Take out a bundle of fibres from at least three parts of each package. After blending them homogeneously, divide the sample into two equal portions, one portion randomly selected is retained and the other is rejected.

After mixing the retained portion to ensure it is homogenized, divide it again into two equal portions in the same way. Reject one portion (select at random).

Continue the subdivision procedure until about 20 g of fibres remain; this is the lot sample.

Divide the 20 g of fibre sample into two portions. Use one portion as the laboratory sample and retain the other as a spare sample.

A.2 Sliver

Randomly take altogether four different 30 cm long slivers from four different ball tops or sliver cans. Strip each of the four slivers in its longitudinal direction to form another sliver, which is the laboratory sample. Retain the remaining portions as spare samples.

A.3 Yarn

Take twenty 20 cm long woollen yarn segments from each of five different cones or skeins to obtain 100 woollen yarn segments.

Take twenty 20 cm long worsted yarn segments from each of ten different cones or skeins to obtain 200 worsted yarn segments.

Cut the yarn bundle in the middle to get two portions – use one portion as the laboratory sample and retain the other as a spare sample.

A.4 Woven fabrics

Take three samples, each measuring 5 cm × 10 cm (warp × weft). Samples shall be taken from the fabric roll ensuring they are at least 100 mm from the cut edge, and least 150 mm from the selvedge and shall be spaced along a diagonal of the fabric to allow for representation of different warp and weft yarns. For each sample, mark its warp and weft directions respectively. Cut at least the integral multiple of a complete pattern in the case of fabrics where there is a definite repetition of the pattern. Cut along the weft direction from the middle of each fabric sample and divide it into two portions. Use one as the laboratory sample and retain the other as a spare sample.

A.5 Knitted fabrics

Take three samples each measuring 5 cm × 10 cm (course × wale). Avoid rib sections such as cuff or bottom parts. Cut each sample from the middle along longitudinal direction into two portions. Use one portion as the laboratory sample and retain the other as a spare sample.

© ISO 2023 – All rights reserved

Documents
Document Sharing Hub
Full document details: ISO 17751-2-2023

Annex B
(informative)

Surface morphology of common animal fibres

B.1 Cashmere from China

B.1.1 Typical ring-shaped morphology

Consider Figure B.1, Figure B.2, Figure B.3, Figure B.4, Figure B.5, Figure B.6, Figure B.7, Figure B.8, Figure B.9 and Figure B.10 for fibre identification.

This cashmere shows high fibre diameter evenness in its axial direction and good lustre. The fibre scales are regular, most are ring-shaped and a few irregular ring-shaped; few changes can be seen. The scale envelopes the fibre shaft flatly and evenly; scales are thin with smooth surfaces. The distance between adjacent scales is large. The mean scale height is less than 0,4 µm. The mean scale frequency is between 54 scales/mm and 64 scales/mm.

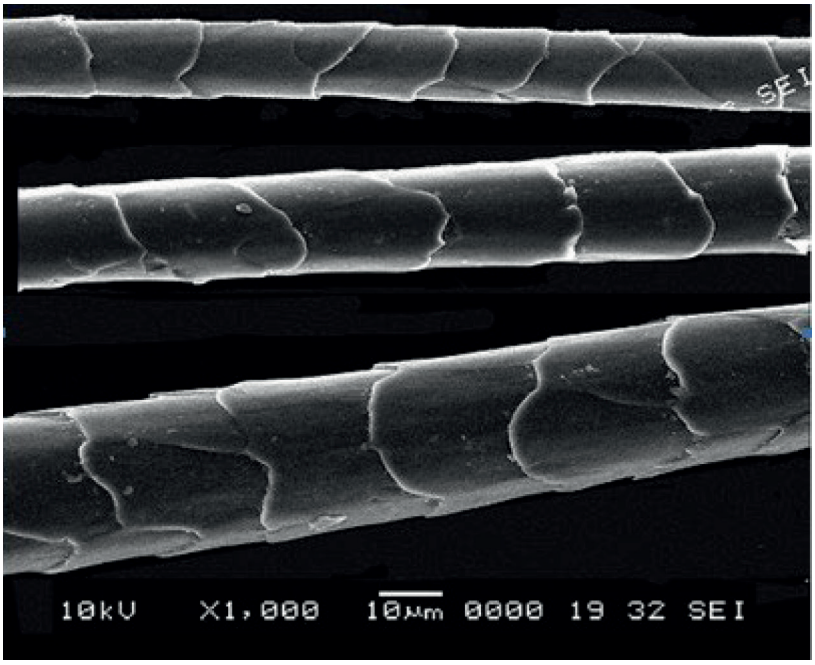

Figure B.1 — Scales encircle fibre shaft flatly and regularly with regular patterns and smooth surface

© ISO 2023 – All rights reserved
Documents
Document Sharing Hub
Full document details: ISO 17751-2-2023

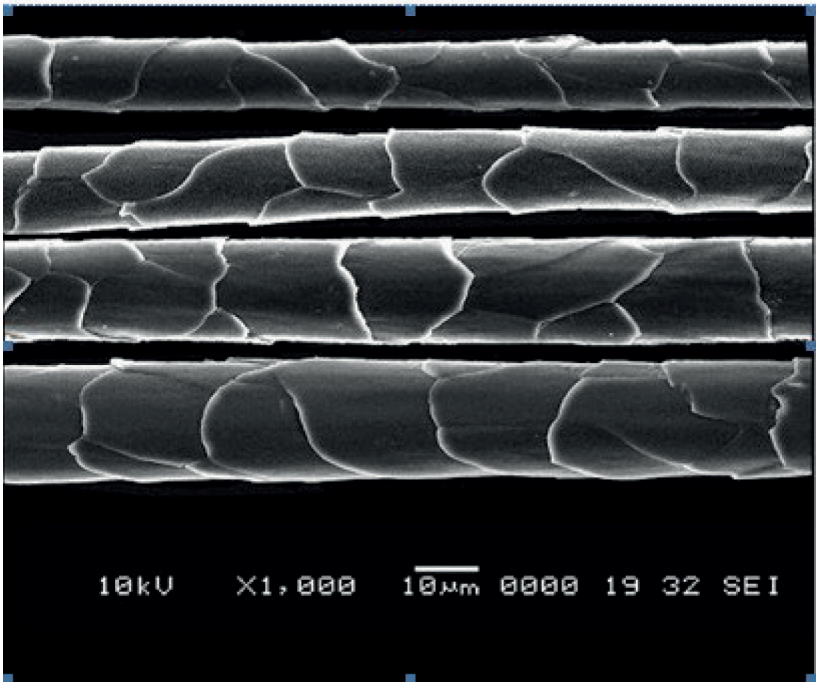

Figure B.2 — Some scale patterns are slightly irregular

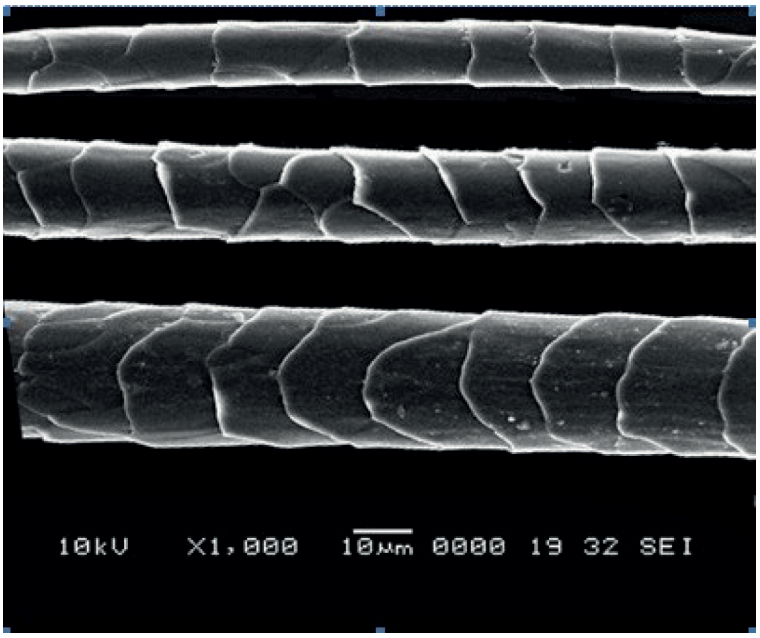

Figure B.3 — Scale frequencies from low to high

© ISO 2023 – All rights reserved

Documents
Document Sharing Hub
Full document details: ISO 17751-2-2023

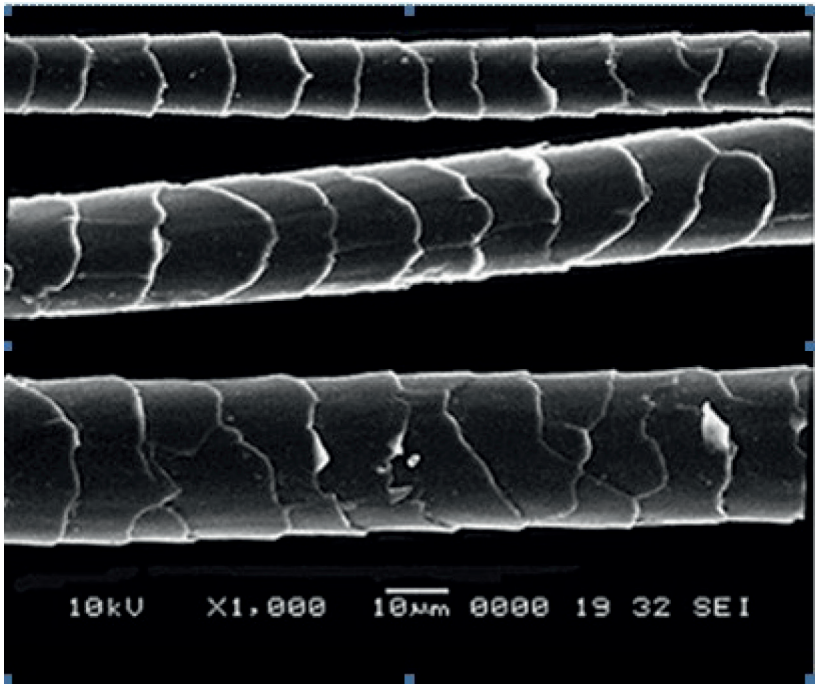

Figure B.4 — Scale frequencies are slightly high

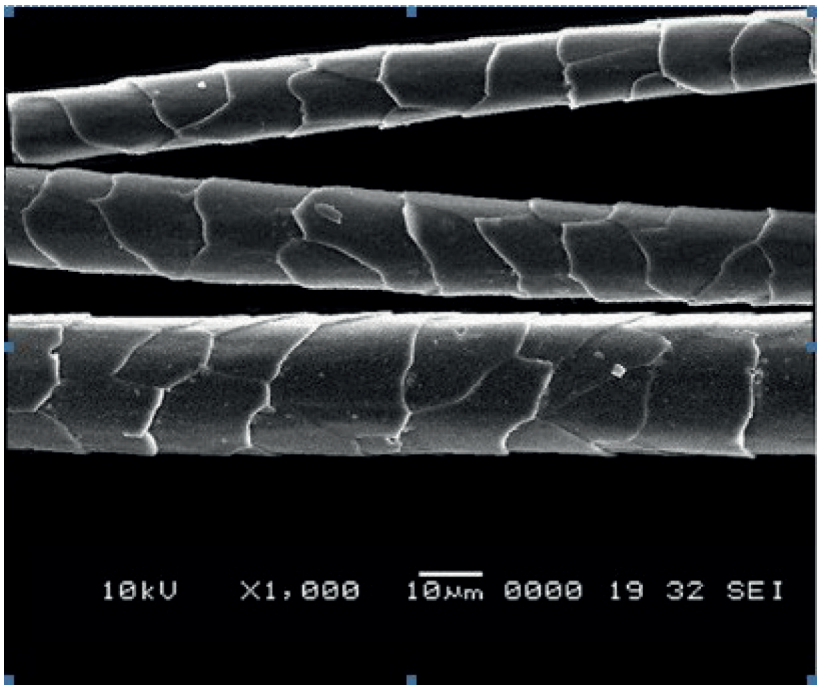

Figure B.5 — Scale edges are serrated

© ISO 2023 – All rights reserved
Documents
Document Sharing Hub
Full document details: ISO 17751-2-2023