INTERNATIONAL STANDARD

ISO 20332

Second edition
2016-06-01

Corrected version
2018-11

Cranes — Proof of competence of steel structures

Appareils de levage à charge suspendue — Vérification d'aptitude des charpentes en acier

Reference number
ISO 20332:2016(E)

Documents
Document Sharing Hub

© ISO 2016

Full document details: ISO 20332-2016 (2018)

COPYRIGHT PROTECTED DOCUMENT

© ISO 2016

All rights reserved. Unless otherwise specified, or required in the context of its implementation, no part of this publication may be reproduced or utilized otherwise in any form or by any means, electronic or mechanical, including photocopying, or posting on the internet or an intranet, without prior written permission. Permission can be requested from either ISO at the address below or ISO's member body in the country of the requester.

ISO copyright office
CP 401 • Ch. de Blandonnet 8
CH-1214 Vernier, Geneva
Phone: +41 22 749 01 11
Fax: +41 22 749 09 47
Email: copyright@iso.org
Website: www.iso.org

Published in Switzerland

© ISO 2016 – All rights reserved

Documents
Document Sharing Hub

Full document details: ISO 20332-2016 (2018)

Contents

Foreword 5

1 Scope 1

2 Normative references 1

3 Terms, definitions, symbols and abbreviated terms 2

4 General 8
4.1 General principles 8
4.2 Documentation 8
4.3 Alternative methods 8
4.4 Materials of structural members 8
4.5 Bolted connections 11
4.5.1 Bolt materials 11
4.5.2 General 11
4.5.3 Shear and bearing connections 11
4.5.4 Friction grip type (slip resistant) connections 12
4.5.5 Connections loaded in tension 12
4.6 Pinned connections 12
4.7 Welded connections 12
4.8 Proof-of-competence for structural members and connections 13

5 Proof of static strength 13
5.1 General 13
5.2 Limit design stresses and forces 14
5.2.1 General 14
5.2.2 Limit design stress in structural members 14
5.2.3 Limit design forces in bolted connections 15
5.2.4 Limit design forces in pinned connections 23
5.2.5 Limit design stresses in welded connections 27
5.3 Execution of the proof 29
5.3.1 Proof for structural members 29
5.3.2 Proof for bolted connections 29
5.3.3 Proof for pinned connections 29
5.3.4 Proof for welded connections 30

6 Proof of fatigue strength 31
6.1 General 31
6.2 Limit design stresses 32
6.2.1 Characteristic fatigue strength 32
6.2.2 Weld quality 33
6.2.3 Requirements for fatigue testing 34
6.3 Stress histories 35
6.3.1 Determination of stress histories 35
6.3.2 Frequency of occurrence of stress cycles 35
6.3.3 Stress history parameter 36
6.3.4 Determination of stress history class, S 39
6.4 Execution of the proof 40
6.5 Determination of the limit design stress range 40
6.5.1 Applicable methods 40
6.5.2 Direct use of stress history parameter 40

© ISO 2016 – All rights reserved

Documents
Document Sharing Hub

Full document details: ISO 20332-2016 (2018)

6.5.3 Use of S classes ... 41
6.5.4 Independent concurrent normal and/or shear stresses ... 42

7 Proof of elastic stability ... 43
7.1 General ... 43
7.2 Lateral buckling of members loaded in compression ... 43
7.2.1 Critical buckling load ... 43
7.2.2 Limit compressive design force ... 44
7.3 Buckling of plate fields subjected to compressive and shear stresses ... 46
7.3.1 General ... 46
7.3.2 Limit design stress with respect to longitudinal stress σ_x ... 48
7.3.3 Limit design stress with respect to transverse stress σ_y ... 50
7.3.4 Limit design stress with respect to shear stress τ ... 51
7.4 Execution of the proof ... 52
7.4.1 Members loaded in compression ... 52
7.4.2 Plate fields ... 52

Annex A (informative) Limit design shear force, $F_{v,Rd}$, in shank per bolt and per shear plane for multiple shear plane connections ... 54

Annex B (informative) Preloaded bolts ... 55

Annex C (normative) Design weld stresses, $\sigma_{w,Sd}$ and $\tau_{w,Sd}$ ... 57

Annex D (normative) Values of slope constant, m, and characteristic fatigue strength, $\Delta\sigma_c$, $\Delta\tau_c$ ... 61

Annex E (normative) Calculated values of limit design stress range, $\Delta\sigma_{Rd}$ and $\Delta\sigma_{Rd,1}$ ... 85

Annex F (informative) Evaluation of stress cycles — Example ... 87

Annex G (informative) Calculation of stiffnesses for connections loaded in tension ... 89

Bibliography ... 92

© ISO 2016 - All rights reserved
Documents Document Sharing Hub
Full document details: ISO 20332-2016 (2018)

Foreword

ISO (the International Organization for Standardization) is a worldwide federation of national standards bodies (ISO member bodies). The work of preparing International Standards is normally carried out through ISO technical committees. Each member body interested in a subject for which a technical committee has been established has the right to be represented on that committee. International organizations, governmental and non-governmental, in liaison with ISO, also take part in the work. ISO collaborates closely with the International Electrotechnical Commission (IEC) on all matters of electrotechnical standardization.

The procedures used to develop this document and those intended for its further maintenance are described in the ISO/IEC Directives, Part 1. In particular the different approval criteria needed for the different types of ISO documents should be noted. This document was drafted in accordance with the editorial rules of the ISO/IEC Directives, Part 2 (see www.iso.org/directives).

Attention is drawn to the possibility that some of the elements of this document may be the subject of patent rights. ISO shall not be held responsible for identifying any or all such patent rights. Details of any patent rights identified during the development of the document will be in the Introduction and/or on the ISO list of patent declarations received (see www.iso.org/patents).

Any trade name used in this document is information given for the convenience of users and does not constitute an endorsement.

For an explanation on the meaning of ISO specific terms and expressions related to conformity assessment, as well as information about ISO's adherence to the World Trade Organization (WTO) principles in the Technical Barriers to Trade (TBT) see the following URL: www.iso.org/iso/foreword.html

The committee responsible for this document is ISO/TC 96, *Cranes*, Subcommittee SC 10, *Design principles and requirements*.

This second edition cancels and replaces the first edition (ISO 20332:2008), which has been technically revised.

This corrected version of ISO 20332:2016 incorporates a correction in Formula (67).

© ISO 2016 – All rights reserved

Documents
Document Sharing Hub
Full document details: ISO 20332-2016 (2018)

Documents
Document Sharing Hub

Full document details: ISO 20332-2016 (2018)

Cranes — Proof of competence of steel structures

1 Scope

This International Standard sets forth general conditions, requirements, methods, and parameter values for performing proof-of-competence determinations of the steel structures of cranes based upon the limit state method. It is intended to be used together with the loads and load combinations of the applicable parts of ISO 8686.

This International Standard is general and covers cranes of all types. Other International Standards can give specific proof-of-competence requirements for particular crane types.

Proof-of-competence determinations, by theoretical calculations and/or testing, are intended to prevent hazards related to the performance of the structure by establishing the limits of strength, e.g. yield, ultimate, fatigue, and brittle fracture.

According to ISO 8686-1 there are two general approaches to proof-of-competence calculations: the *limit state* method, employing partial safety factors, and the *allowable stress* method, employing a global safety factor. Though it does not preclude the validity of allowable stress methodology, ISO 20332 deals only with the limit state method.

Proof-of-competence calculations for components of accessories (e.g. handrails, stairs, walkways, cabins) are not covered by this International Standard. However, the influence of such attachments on the main structure needs to be considered.

2 Normative references

The following documents, in whole or in part, are normatively referenced in this document and are indispensable for its application. For dated references, only the edition cited applies. For undated references, the latest edition of the referenced document (including any amendments) applies.

ISO 148-1:2009, *Metallic materials — Charpy pendulum impact test — Part 1: Test method*

ISO 273:1979, *Fasteners — Clearance holes for bolts and screws*

ISO 286-2:2010, *Geometrical product specifications (GPS) — ISO code system for tolerances on linear sizes — Part 2: Tables of standard tolerance classes and limit deviations for holes and shafts*. Corrected by ISO 286-2:2010/Cor 1:2013.

ISO 404:1992, *Steel and steel products — General technical delivery requirements*

ISO 898-1:2013, *Mechanical properties of fasteners made of carbon steel and alloy steel — Part 1: Bolts, screws and studs with specified property classes — Coarse thread and fine pitch thread*

ISO 4042:1999, *Fasteners — Electroplated coatings*

ISO 4301-1:2016, *Cranes and lifting appliances — Classification — Part 1: General*

© ISO 2016 – All rights reserved

Documents
Document Sharing Hub
Full document details: ISO 20332-2016 (2018)

ISO 4306-1:2007, *Cranes — Vocabulary — Part 1: General*

ISO 5817:2014, *Welding — Fusion-welded joints in steel, nickel, titanium and their alloys (beam welding excluded) — Quality levels for imperfections*

ISO 7452:2013, *Hot-rolled steel plates — Tolerances on dimensions and shape*

ISO 7788:1985, *Steel — Surface finish of hot-rolled plates and wide flats — Delivery requirements*

ISO 8686-1:2012, *Cranes — Design principles for loads and load combinations — Part 1: General*

ISO 8686-2, *Cranes — Design principles for loads and load combinations — Part 2: Mobile cranes*

ISO 8686-3, *Cranes — Design principles for loads and load combinations— Part 3: Tower cranes*

ISO 8686-4, *Cranes — Design principles for loads and load combinations— Part 4: Jib cranes*

ISO 8686-5, *Cranes — Design principles for loads and load combinations— Part 5: Overhead travelling and portal bridge cranes*

ISO 9013:2002, *Thermal cutting — Classification of thermal cuts — Geometrical product specification and quality tolerances*

ISO 9587:2007, *Metallic and other inorganic coatings — Pretreatments of iron or steel to reduce the risk of hydrogen embrittlement*

ISO 12100, *Safety of machinery — Basic concepts, general principles for design — Risk assessment and risk reduction*

ISO 15330:1999, *Fasteners — Preloading test for the detection of hydrogen embrittlement — Parallel bearing surface method*

ISO 17659:2002, *Welding — Multilingual terms for welded joints with illustrations*

3 Terms, definitions, symbols and abbreviated terms

For the purposes of this document, the terms and definitions given in ISO 12100, ISO 17659, ISO 4306-1:2007, Clause 6, and the following terms, definitions, symbols and abbreviated terms (see Table 1) apply.

3.1
grade of steel
marking that defines the strength of steel, usually defining yield stress, f_y, sometimes also ultimate strength, f_u

3.2
quality of steel
marking that defines the impact toughness and test temperature of steel

© ISO 2016 - All rights reserved
Documents Document Sharing Hub
Full document details: ISO 20332-2016 (2018)

Table 1 — Main symbols and abbreviations used in this International Standard

Symbol	Description
A	Cross-section
A_{eq}	Equivalent area for calculation
A_n	Net cross-sectional area at bolt or pin holes
A_r	Minor area of the bolt
A_S	Stress area of the bolt
a	Geometric dimension
a_{hi}	Geometric dimension for weld penetration
a_r	Effective weld thickness
b	Geometric dimension
c	Geometric dimension
D_A	Diameter of available cylinder of clamped material
D_i	Inner diameter of hollow pin
D_o	Outer diameter of hollow pin
d	Diameter (shank of bolt, pin)
d_h	Diameter of the hole
d_w	Diameter of the contact area of the bolt head
d_0	Diameter of the hole
E	Modulus of elasticity
e_1, e_2	Edge distances
F	Force
F_b	Tensile force in bolt
$F_{b,Rd}$	Limit design bearing force
$F_{b,Sd}$, $F_{bi,Sd}$	Design bearing force
ΔF_b	Additional force
F_{cr}	Reduction in the compression force due to external tension
$F_{cs,Rd}$	Limit design tensile force
F_d	Limit force
$F_{e,t}$	External force (on bolted connection)
F_k	Characteristic value (force)
F_p	Preloading force in bolt

© ISO 2016 – All rights reserved

Documents
Document Sharing Hub
Full document details: ISO 20332-2016 (2018)

Table 1 (*continued*)

Symbols	Description
$F_{p,d}$	Design preloading force
F_{Rd}	Limit design force
F_{Sd}	Design force of the element
$F_{s,Rd}$	Limit design slip force per bolt and friction interface
$F_{t1,Rd}$, $F_{t2,Rd}$	Limit design tensile forces per bolt
$F_{t,Sd}$	External tensile force per bolt
$F_{v,Rd}$	Limit design shear force per bolt/pin and shear plane
$F_{v,Sd}$	Design shear force per bolt/pin and shear plane
$F_{\sigma,\tau}$	Acting normal/shear force
f	Out-of-plane imperfection of plate field
$f_{b,Rd,x}$	Limit design compressive longitudinal stress
$f_{b,Rd,y}$	Limit design compressive transverse stress
$f_{b,Rd,\tau}$	Limit design buckling shear stress
f_d	Limit stress
f_k	Characteristic value (stress)
f_{Rd}	Limit design stress
f_u	Ultimate strength of material
f_{ub}	Ultimate strength of bolts
f_{uw}	Ultimate strength of the weld
$f_{w,\,Rd}$	Limit design weld stress
f_y	Yield stress of material or 0,2 % offset yield strength
f_{yb}	Yield stress of bolts
f_{yk}	Yield stress (minimum value) of base material or member
f_{yp}	Yield stress of pins
h	Thickness of workpiece
h_d	Distance between weld and contact area of acting load
I	Moment of inertia
K_b	Stiffness (slope) of bolt
K_c	Stiffness (slope) of flanges
k_m	Stress spectrum factor based on m of the detail under consideration

© ISO 2016 – All rights reserved
Documents Document Sharing Hub
Full document details: ISO 20332-2016 (2018)

Table 1 (*continued*)

Symbols	Description
k^*	Specific spectrum ratio factor
$k_{\sigma x}$, k_τ	Buckling factors for plate fields
L	Length of compressed member
l_k	Effective clamped length
l_m	Gauge length for imperfection of plate field
l_r	Effective weld length
l_w	Weld length
l_1	Effective length for tension without threat
l_2	Effective length for tension with threat
M_{Rd}	Limit design bending moment
M_{Sd}	Design bending moment
m	(Negative inverse) slope constant of log σ/log N curve
N	Number of stress cycles to failure by fatigue
N_c	Compressive force
N_k	Critical buckling load of compressed member
N_{Rd}	Limit design compressive force
N_{Sd}	Design compressive force
N_{ref}	Number of cycles at the reference point
N_t	Total number of occurrences
NC	Notch class
NDT	Non-destructive testing
n_i	Number of stress cycles with stress amplitude of range i
n	Number of equally loaded bolts
P_s	Probability of survival
p_1, p_2	Distances between bolt centres
Q	Shear force
q_i	Impact toughness parameter
R_d	Design resistance
r	Radius of wheel
S	Class of stress history parameter, s
S_d	Design stresses or forces

© ISO 2016 – All rights reserved

Documents
Document Sharing Hub
Full document details: ISO 20332-2016 (2018)

Table 1 (*continued*)

Symbols	Description
s_m	Stress history parameter
T	Temperature
TIG	Tungsten inert gas
t	Thickness
U	Class of working cycles
u	Shape factor
v	Diameter ratio
W_{el}	Elastic section modulus
α	Characteristic factor for bearing connection
α_w	Characteristic factor for limit weld stress
γ_{mf}	Fatigue strength specific resistance factor
γ_m	General resistance factor
γ_p	Partial safety factor
γ_R	Total resistance factor
γ_{Rb}	Total resistance factor of bolt
γ_{Rc}	Total resistance factor for tension on sections with holes
γ_{Rm}	Total resistance factor of members
γ_{Rp}	Total resistance factor of pins
γ_{Rs}	Total resistance factor of slip-resistance connection
γ_s	Specific resistance factor
γ_{sb}	Specific resistance factor of bolt
γ_{sm}	Specific resistance factor of members
γ_{sp}	Specific resistance factor of pins
γ_{ss}	Specific resistance factor of slip-resistance connection
γ_{st}	Specific resistance factor for tension on sections with holes
$\Delta\delta_t$	Additional elongation
δ_p	Elongation from preloading
Θ_i	Incline of diagonal members
κ	Dispersion angle
λ	Width of contact area in weld direction
μ	Slip factor

© ISO 2016 – All rights reserved
Documents Document Sharing Hub
Full document details: ISO 20332-2016 (2018)

Table 1 (*continued*)

Symbols	Description
ν	Relative total number of stress cycles (normalized)
ν_D	Ratio of diameters
σ	Indicate the respective stress
Δ_σ	Stress range
$\Delta\sigma_i$	Stress range *i*
$\Delta\hat{\sigma}$	Maximum stress range
σ_b	Lower extreme value of stress cycle
$\Delta\sigma_c$	Characteristic fatigue strength (normal stress)
σ_e	Reference stress for plate buckling
σ_m	Constant mean stress selected for one-parameter classification of stress cycles
$\Delta\sigma_{Rd}$	Limit design stress range (normal)
$\Delta\sigma_{Rd,1}$	Limit design stress range for $k^* = 1$
σ_{Sd}	Design stress (normal)
$\Delta\sigma_{Sd}$	Design stress range (normal)
$\sigma_{Sd,x}$	Design compressive longitudinal stress
$\sigma_{Sd,y}$	Design compressive transverse stress
σ_u	Upper extreme value of stress cycle
$\sigma_{w,Sd}$	Design weld stress (normal)
σ_x, σ_y	Normal stress component in direction *x*, *y*
$\hat{\sigma}_a$	Maximum stress amplitude
min σ, max σ	Extreme values of stresses
τ	Shear stress
$\Delta\tau_c$	Characteristic fatigue strength (shear stress)
τ_{Sd}	Design stress (shear)
$\Delta\tau_{Sd}$	Design stress range (shear)
$\Delta\tau_{Rd}$	Limit design stress range (shear)
$\tau_{w,Sd}$	Design weld stress (shear)
ϕ_i	Dynamic factor
Ψ	Stress ratio across plate fields

© ISO 2016 – All rights reserved

Documents
Document Sharing Hub
Full document details: ISO 20332-2016 (2018)

4 General

4.1 General principles

Proof-of-competence calculations shall be done for components, members, and details exposed to loading or repetitive loading cycles that could cause failure, cracking, or distortion interfering with crane functions.

NOTE See ISO 8686 for further information applicable to the various types of crane. Not all calculations are applicable for every crane type.

4.2 Documentation

The documentation of the proof-of-competence calculations shall include the following:

— design assumptions including calculation models;

— applicable loads and load combinations;

— material properties;

— weld quality classes in accordance with ISO 5817;

— properties of connecting elements;

— relevant limit states;

— results of the proof-of-competence calculations and tests when applicable.

4.3 Alternative methods

The competence may be verified by experimental methods in addition to or in coordination with the calculations. The magnitude and distribution of loads during tests shall correspond to the design loads and load combinations for the relevant limit states.

Alternatively, advanced and recognized theoretical or experimental methods generally may be used, provided that they conform to the principles of this International Standard.

4.4 Materials of structural members

It is recommended that steels in accordance with the following International Standards be used:

— ISO 630;

— ISO 6930-1;

— ISO 4950-1;

— ISO 4951-1, ISO 4951-2, and ISO 4951-3.

Where other steels are used, the specific values of strengths f_u and f_y shall be specified. The mechanical properties and the chemical composition shall be specified in accordance with ISO 404. Furthermore, the following conditions shall be fulfilled:

© ISO 2016 - All rights reserved
Documents Document Sharing Hub
Full document details: ISO 20332-2016 (2018)

— the design value of f_y shall be limited to $f_u/1{,}05$ for materials with $f_u/f_y < 1{,}05$;

— the percentage elongation at fracture $A \geq 7$ % on a gauge length $L_0 = 5{,}65 \times \sqrt{S_0}$ (where S_0 is the original cross-sectional area);

— the weldability or non-weldability of the material shall be specified and, if intended for welding, weldability demonstrated;

— if the material is intended for cold forming, the pertinent parameters shall be specified.

To allow the use of nominal values of plate thicknesses in the proof calculations, the minus tolerance of the plate shall be equal or better than that of class A of ISO 7452:2013. Otherwise, the actual minimum value of plate thickness shall be used.

When verifying the grade and quality of the steel (see referenced International Standards) used for tensile members, the sum of impact toughness parameters, q_i, shall be taken into account. Table 2 gives q_i for various influences. The required impact energy/test temperatures in dependence of $\sum q_i$ are shown in Table 3 and shall be specified by the steel manufacturer on the basis of ISO 148-1.

© ISO 2016 – All rights reserved

Documents
Document Sharing Hub
Full document details: ISO 20332-2016 (2018)

Table 2 — Impact toughness parameters, q_i

i	Influence		q_i
1	Operating temperature T (°C)	$0 \leq T$	0
		$-10 \leq T < 0$	1
		$-20 \leq T < -10$	2
		$-30 \leq T < -20$	3
		$-40 \leq T < -30$	4
		$-50 \leq T < -40$	6
2	Yield stress f_y (N/mm^2)	$f_y \leq 300$	0
		$300 < f_y \leq 460$	1
		$460 < f_y \leq 700$	2
		$700 < f_y \leq 1\,000$	3
		$1\,000 < f_y \leq 1\,300$	4
3	Material thickness t (mm) Equivalent thickness t for solid bars: 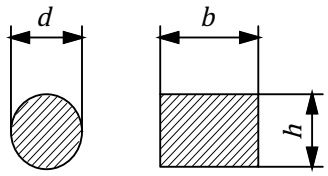 $t = \frac{d}{1{,}8}$ for $\frac{b}{h} < 1{,}8$: $t = \frac{b}{1{,}8}$	$t \leq 10$	0
		$10 < t \leq 20$	1
		$20 < t \leq 40$	2
		$40 < t \leq 60$	3
		$60 < t \leq 80$	4
		$80 < t \leq 100$	5
		$100 < t \leq 125$	6
		$125 < t \leq 150$	7
4	Characteristic value of stress range $\Delta\sigma_c$ (N/mm^2) (see Annex D)	$\Delta\sigma_c > 125$	0
		$80 < \Delta\sigma_c \leq 125$	1
		$56 < \Delta\sigma_c \leq 80$	2
		$40 < \Delta\sigma_c \leq 56$	3
		$30 < \Delta\sigma_c \leq 40$	4
		$\Delta\sigma_c \leq 30$	5
5	Utilization of static strength (see 5.3.1)	$\sigma_{Sd} > 0{,}75 \times f_{Rd\sigma}$	0
		$0{,}5 \times f_{Rd\sigma} < \sigma_{Sd}$ and $\sigma_{Sd} \leq 0{,}75 \times f_{Rd\sigma}$	−1
		$0{,}25 \times f_{Rd\sigma} < \sigma_{Sd}$ and $\sigma_{Sd} \leq 0{,}5 \times f_{Rd\sigma}$	−2
		$\sigma_{Sd} \leq 0{,}25 \times f_{Rd\sigma}$	−3

© ISO 2016 - All rights reserved
Documents Document Sharing Hub
Full document details: ISO 20332-2016 (2018)

Table 3 — Impact toughness requirement for $\sum q_i$

	$\sum q_i \leq 5$	$6 \leq \sum q_i \leq 8$	$9 \leq \sum q_i \leq 11$	$12 \leq \sum q_i \leq 14$
Impact energy/ test temperature requirement	27 J/ + 20°C	27 J/0 °C	27 J/ −20 °C	27 J/ −40 °C

4.5 Bolted connections

4.5.1 Bolt materials

For bolted connections, bolts of the property classes (bolt grades) in accordance with ISO 898-1:2013 given in Table 4 shall be used. Table 4 shows nominal values of the strengths.

Table 4 — Property classes (bolt grades)

Property class (bolt grade)	**4.6**	**5.6**	**8.8**	**10.9**	**12.9**
f_{yb} (N/mm^2)	240	300	640	900	1 080
f_{ub} (N/mm^2)	400	500	800	1 000	1 200

Where necessary, the designer should ask the bolt provider to demonstrate compliance with the requirements for protection against hydrogen brittleness relative to the property classes (bolt grades) 10.9 and 12.9. Technical requirements can be found in ISO 15330, ISO 4042, and ISO 9587.

4.5.2 General

For the purposes of this International Standard, bolted connections are connections between members and/or components utilizing bolts where the following applies:

— bolts shall be tightened sufficiently to compress the joint surfaces together when subjected to vibrations, reversals or fluctuations in loading, or where slippage can cause deleterious changes in geometry;

— in general, bolted connections can be made wrench tight;

— the joint surfaces shall be secured against rotation (e.g. by using multiple bolts).

4.5.3 Shear and bearing connections

For the purposes of this International Standard, shear and bearing connections are those connections where the loads act perpendicular to the bolt axis and cause shear and bearing stresses in the bolts and bearing stresses in the connected parts and where the following applies:

— the clearance between the bolt and the hole shall conform to ISO 286-2:2010, tolerances h13 and H11, or closer, when bolts are exposed to load reversal or where slippage can cause deleterious changes in geometry;

— in other cases, wider clearances in accordance with ISO 273 may be used,

— only the unthreaded part of the shank shall be considered in the bearing calculations;

— special surface treatment of the contact surfaces is not required.

© ISO 2016 – All rights reserved

Documents
Document Sharing Hub
Full document details: ISO 20332-2016 (2018)

4.5.4 Friction grip type (slip resistant) connections

For the purposes of this International Standard, friction grip connections are those connections where the loads are transmitted by friction between the joint surfaces and where the following applies:

— high strength bolts of property classes (bolt grades) 8.8, 10.9 or 12.9 according to ISO 898-1:2013 shall be used;

— bolts shall be tightened by a controlled method to a specified preloading state;

— the surface condition of the contact surfaces shall be specified and taken into account accordingly;

— in addition to standard holes, oversized and slotted holes may be used.

4.5.5 Connections loaded in tension

For the purposes of this International Standard, connections loaded in tension are those connections where the loads act in the direction of the bolt axis and cause axial stresses in the bolts and where the following applies:

— preloaded joints shall comprise high strength bolts of property classes (bolt grades) 8.8, 10.9 or 12.9 according to ISO 898-1:2013 tightened by a controlled method to a specified preloading state;

— the additional bolt tension that can be induced by leverage action (prying) due to joint geometry shall be considered;

— evaluation of bolt fatigue shall consider variations in bolt tension affected by the structural features of the joint, e.g. stiffness of the connected parts and prying action.

NOTE Bolts in tension that are not preloaded are treated as structural members.

4.6 Pinned connections

For the purposes of this International Standard, pinned connections are connections that do not constrain rotation between the connected parts. Only round pins are considered.

The requirements herein apply to pinned connections designed to carry loads, i.e. they do not apply to connections made only as a convenient means of attachment.

Clearance between pin and hole shall be in accordance with ISO 286-2:2010, tolerances h13 and H13, or closer. In case of loads with changing directions, closer tolerances shall be applied.

All pins shall be furnished with retaining means to prevent the pins from becoming displaced from the hole.

When pinned connections are intended to permit rotation under load, the retaining means shall restrict the axial displacement of the pin.

In order to inhibit local out-of-plane distortion (dishing), consideration shall be given to the stiffness of the connected parts.

4.7 Welded connections

For the purposes of this International Standard, welded connections are joints between members and/or components that utilize fusion welding processes and where the joined parts are 3 mm or larger in thickness.

Terms for welded connections are as given in ISO 17659.

© ISO 2016 - All rights reserved
Documents Document Sharing Hub
Full document details: ISO 20332-2016 (2018)

The quality levels of ISO 5817 are applicable and appropriate methods of non-destructive testing shall be used to verify compliance with quality level requirements.

In general, ISO 5817:2014, quality level C, is acceptable in connections requiring a static proof of competence.

ISO 5817:2014, quality level D, may be applied only in joints where local failure of the weld will not result in failure of the structure or falling of loads.

Although the distribution of stresses along the length of the weld can be non-uniform, such distributions can, in most cases, be considered uniform, in which case the effective weld length shall not exceed 150 times the weld thickness a. However, other stress distributions may be assumed provided they satisfy the basic requirements of equilibrium and continuity and that they adequately relate to the actual deformation characteristics of the joint.

Residual stresses and stresses not participating in the transfer of forces need not be considered in the design of welds subjected to static actions. This applies specifically to the normal stress parallel to the axis of the weld, which is accommodated by the base material.

When the static tensile strength of a butt joint is tested, the test may be carried out with weld reinforcement not removed.

4.8 Proof-of-competence for structural members and connections

The object of the proof-of-competence is to demonstrate that the design stresses or forces, S_d, do not exceed the design resistances, R_d.

$$S_d \leq R_d \tag{1}$$

The design stresses or forces, S_d, shall be determined by applying the relevant loads, load combinations, and partial safety factors from the applicable parts of ISO 8686.

In the following clauses, the design resistances, R_d, are represented by limit stresses, f_d, or limit forces, F_d.

The following proofs for structural members and connections shall be demonstrated:

— proof of static strength in accordance with Clause 5;

— proof of fatigue strength in accordance with Clause 6;

— proof of elastic stability in accordance with Clause 7.

5 Proof of static strength

5.1 General

Proof of static strength by calculation is intended to prevent excessive deformation due to yielding of the material, sliding of friction-grip connections, elastic instability (see Clause 7), and fracture of structural members or connections. Dynamic factors given in the applicable parts of ISO 8686 or in product standards implementing ISO 8686-1 shall be used to produce static-equivalent loads to simulate dynamic effects.

The use of the theory of plasticity for calculation of ultimate load bearing capacity is not considered acceptable within the terms of this International Standard.

© ISO 2016 – All rights reserved

Documents
Document Sharing Hub
Full document details: ISO 20332-2016 (2018)

The proof shall be carried out for structural members and connections while taking into account the most unfavourable effects under load combinations A, B, or C from the applicable parts of ISO 8686 and comparing them with the design resistances given in 5.2.

This International Standard considers only nominal stresses, i.e. those calculated using traditional elastic strength of materials theory; localized stress concentration effects are excluded. When alternative methods of stress calculation are used such as finite element analysis, using those stresses directly for the proof given in this International Standard could yield inordinately conservative results as the given limit states are intended to be used in conjunction with nominal stresses.

5.2 Limit design stresses and forces

5.2.1 General

The limit design stresses shall be calculated from

$$f_{\mathrm{Rd}} = f(f_{\mathrm{k}}, \gamma_{\mathrm{R}}) \tag{2}$$

Limit design forces shall be calculated from

$$F_{\mathrm{Rd}} = f(F_{\mathrm{k}}, \gamma_{\mathrm{R}}) \tag{3}$$

where

f_k, F_k are characteristic (or nominal) values;

γ_R is the total resistance factor: $\gamma_R = \gamma_m \times \gamma_s$;

γ_m is the general resistance factor: $\gamma_m = 1{,}1$;

This constant value replaces all those from the applicable parts of ISO 8686.

γ_s is the specific resistance factor applicable to specific structural components as given in the subclauses below.

f_{Rd} and F_{Rd} are equivalent to R/γ_m in ISO 8686-1:2012, Figure A.2.

5.2.2 Limit design stress in structural members

The limit design stress, f_{Rd}, used for the proof of structural members shall be calculated from

$$f_{\mathrm{Rd}\sigma} = \frac{f_{\mathrm{yk}}}{\gamma_{\mathrm{Rm}}} \text{ for normal stresses} \tag{4}$$

$$f_{\mathrm{Rd}\tau} = \frac{f_{\mathrm{yk}}}{\gamma_{\mathrm{Rm}}\sqrt{3}} \text{ for shear stresses} \tag{5}$$

with $\gamma_{Rm} = \gamma_m \times \gamma_{sm}$

where

f_{yk} is the minimum value of the yield stress of the material;

γ_{sm} is the specific resistance factor for material:

— for non-rolled material: $\gamma_{sm} = 0{,}95$;

© ISO 2016 - All rights reserved

Documents Document Sharing Hub

Full document details: ISO 20332-2016 (2018)

— for rolled material (e.g. plates and profiles):

γ_{sm} = 0,95 for stresses in the plane of rolling;

γ_{sm} = 0,95 for compressive and shear stresses;

— for tensile stresses perpendicular to the plane of rolling (see Figure 1):

γ_{sm} = 1,0 for plate thicknesses less than 15 mm or material with reduction in area of more than 20 %;

γ_{sm} = 1,16 for material with reduction in area of 20 % to 10 %;

γ_{sm} = 1,50 for material with reduction in area of less than 10 %.

Material shall be suitable for carrying perpendicular loads and shall be free of lamellar defects.

NOTE Reduction in area is the difference, expressed as a percentage of the initial area between the initial cross-sectional area of a tensile test specimen and the minimum cross-sectional area measured after complete separation.

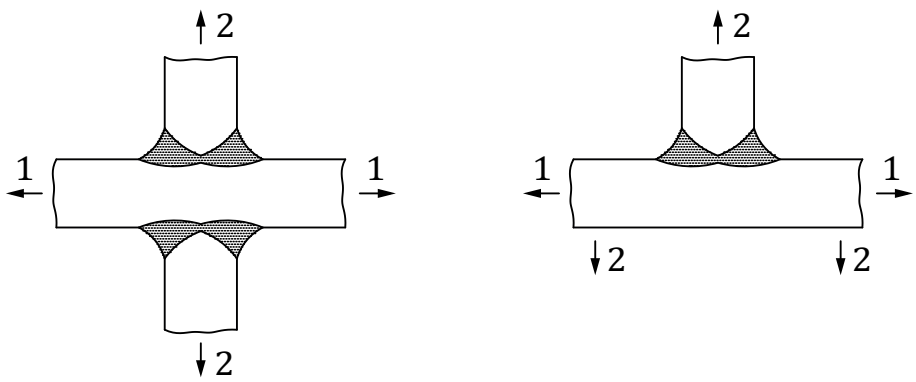

Key

1 direction of the plane of rolling

2 direction of stress/load

Figure 1 — Tensile load perpendicular to plane of rolling

5.2.3 Limit design forces in bolted connections

5.2.3.1 Shear and bearing connections

5.2.3.1.1 General

The resistance of a connection shall be taken as the least value of the limit forces of the individual connection elements.

In addition to the bearing capacity of the connection elements, other limit conditions at the most stressed sections shall be verified using the resistance factor of the base material.

Only the unthreaded part of the shank shall be considered effective in the bearing calculations.

© ISO 2016 – All rights reserved

Documents
Document Sharing Hub

Full document details: ISO 20332-2016 (2018)

5.2.3.1.2 Bolt shear

The limit design shear force, $F_{v,Rd}$, per bolt and for each shear plane shall be calculated from the following.

When threads are not within the shear plane

$$F_{v,Rd} = \frac{f_{yb} \times A}{\gamma_{Rb} \times \sqrt{3}} \tag{6}$$

When threads are within a shear plane

$$F_{v,Rd} = \frac{f_{yb} \times A_S}{\gamma_{Rb} \times \sqrt{3}} \tag{7}$$

Or, for simplification

$$F_{v,Rd} = 0,75 \times \frac{f_{yb} \times A}{\gamma_{Rb} \times \sqrt{3}} \tag{8}$$

with $\gamma_{Rb} = \gamma_m \times \gamma_{sb}$

where

f_{yb} is the yield stress (nominal value) of the bolt material (see Table 4);

A is the cross-sectional area of the bolt shank at the shear plane;

A_S is the stress area of the bolt (see ISO 898-1);

γ_{sb} is the specific resistance factor for bolted connections:

$\gamma_{sb} = 1,0$ for multiple shear plane connections;

$\gamma_{sb} = 1,3$ for single shear plane connections.

See Annex A for limit design shear forces of selected bolt sizes.

5.2.3.1.3 Bearing on bolts and connected parts

The limit design bearing force, $F_{b,Rd}$, per bolt and per part shall be calculated from

$$F_{b,Rd} = \frac{f_y \times d \times t}{\gamma_{Rb}} \tag{9}$$

with $\gamma_{Rb} = \gamma_m \times \gamma_{sb}$

where

f_y is the lowest yield stress of the materials in the joint;

d is the shank diameter of the bolt;

t is the thickness of the connected part in contact with the unthreaded part of the bolt;

γ_{sb} is the specific resistance factor for bolted connections:

$\gamma_{sb} = 0,7$ for multiple shear plane connections;

© ISO 2016 - All rights reserved

Documents Document Sharing Hub

Full document details: ISO 20332-2016 (2018)

$\gamma_{sb} = 0{,}9$ for single shear plane connections.

With the following requirements for the plate:

$$e_1 \geq 1{,}5 \times d_0 \tag{10}$$

$$e_2 \geq 1{,}5 \times d_0$$

$$p_1 \geq 3{,}0 \times d_0$$

$$p_2 \geq 3{,}0 \times d_0$$

where

p_1, p_2, e_1, e_2 are distances (see Figure 2);

d_0 is the diameter of the hole.

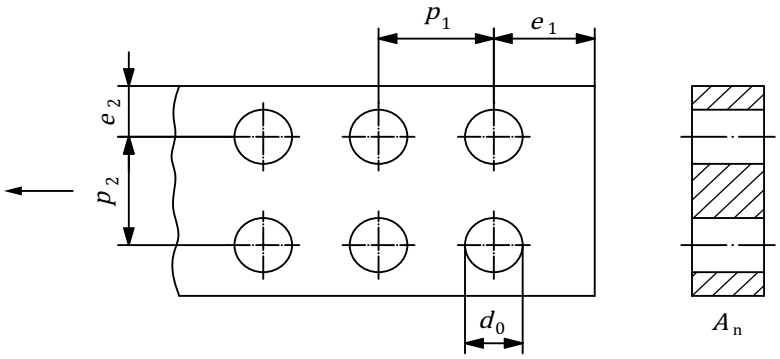

NOTE See also Formula (11).

Figure 2 — Illustration of Formula (10)

5.2.3.1.4 Tension in connected parts

The limit design tensile force with respect to yielding, $F_{cs,Rd}$, on the net cross-section shall be calculated from

$$F_{cs,Rd} = \frac{f_y \times A_n}{\gamma_{Rc}} \tag{11}$$

with $\gamma_{Rc} = \gamma_m \times \gamma_{st}$

where

A_n is the net cross-sectional area at bolt or pin holes (see Figure 2);

γ_{st} is the specific resistance factor for tension on sections with holes:

$\gamma_{st} = 1{,}2$.

5.2.3.2 Friction grip type connections

The resistance of a connection shall be determined by summing the limit forces of the individual connecting elements.

© ISO 2016 – All rights reserved

Documents
Document Sharing Hub
Full document details: ISO 20332-2016 (2018)

For friction grip type connections, the limit design slip force, $F_{s,Rd}$, per bolt and per friction interface shall be calculated from

$$F_{s,Rd} = \frac{\mu \times (F_{p,d} - F_{cr})}{\gamma_{Rs}} \tag{12}$$

with $\gamma_{Rs} = \gamma_m \times \gamma_{ss}$

where

μ is the friction coefficient:

μ = 0,50 for surfaces blasted metallic bright with steel grit or sand, no unevenness;

μ = 0,50 for surfaces blasted with steel grit or sand and aluminized;

μ = 0,50 for surfaces blasted with steel grit or sand and metallized with a product based on zinc;

μ = 0,40 for surfaces blasted with steel grit or sand and alkali-zinc-silicate coating of 50 µm to 80 µm thickness;

μ = 0,40 for surfaces hot-dip galvanized and lightly blasted;

μ = 0,30 for surfaces cleaned metallic bright with wire brush or scarfing;

μ = 0,25 for surfaces cleaned and treated with etch primer;

μ = 0,20 for surfaces cleaned of loose rust, oil and dirt (minimum requirement);

$F_{p,d}$ is the design preloading force;

F_{cr} is the reduction in the compression force due to external tension on connection (as a conservative assumption that does not require the calculation of a stiffness ratio, see 5.2.3.3, $F_{cr} = F_e$ can be used);

γ_{ss} is the specific resistance factor for friction grip type connections (see Table 5).

The applied preloading force shall be greater than or equal to the design preloading force.

Table 5 — Specific resistance factor, γ_{ss}, for friction grip connections

Effect of connection slippage	Type of hole			
	Standard[a]	Oversized[b] and short-slotted[c]	Long-slotted[c]	Long-slotted[d]
Hazard created	1,14	1,34	1,63	2,00
No hazard created	1,00	1,14	1,41	1,63

[a] Holes with clearances in accordance with the medium series of ISO 273.

[b] Holes with clearances in accordance with the coarse series of ISO 273.

[c] Slotted holes with slots perpendicular to the direction of force.

[d] Slotted holes with slots parallel to the direction of force.

Short-slotted holes: the length of the hole is smaller than or equal to 1,25 times the diameter of the bolt.

Long-slotted holes: the length of the hole is larger than 1,25 times the diameter of the coarse series of the bolt. In order to reduce pressure under the bolt or nut, appropriate washers shall be used.

© ISO 2016 - All rights reserved

Documents Document Sharing Hub

Full document details: ISO 20332-2016 (2018)

See Annex B for limit design slip forces using, for example, a specific resistance factor for friction grip of γ_{ss} = 1,14 and a design preloading force of

$$F_{p,d} = 0,7 \times f_{yb} \times A_S$$

where

f_{yb} is the yield stress (nominal value) of the bolt material (see Table 4);

A_S is the stress area of the bolt.

5.2.3.3 Connections loaded in tension

This subclause specifies the limit state for a bolt in the connection. The connected parts and their welds shall be calculated following the general rules for structural members where the preload in the bolt is considered as one loading component.

The proof calculation shall be done for the bolt under maximum external force in a connection with due consideration to the force distribution in a multi-bolt connection and the prying effects (i.e. leverage).

Proof-of-competence calculations of a preloaded connection shall take into account the stiffness of the bolt and the connected parts (see Figure 3).

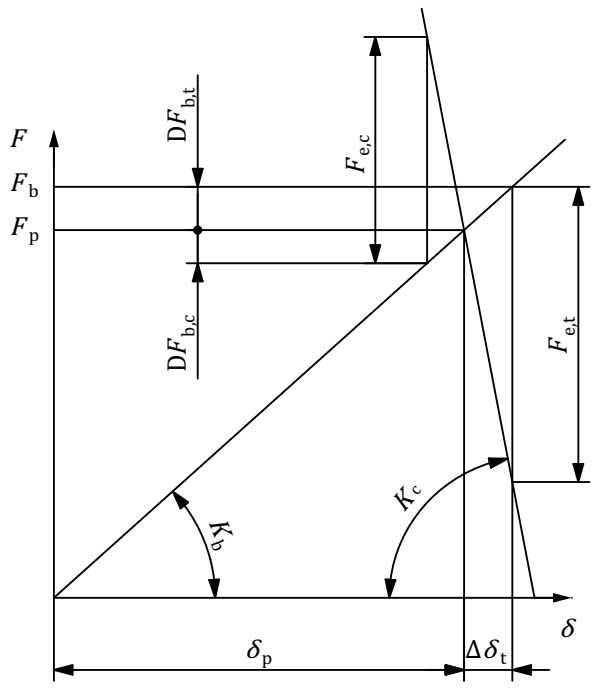

Key

F_p	preloading force in bolt	F_b	tensile force in bolt
δ_p	bolt elongation due to preloading	$\Delta F_{b,t}$	additional force in bolt due to external tensile force
$F_{e,t}$	external tensile force	$\Delta F_{b,c}$	additional force in bolt due to external compression force
$F_{e,c}$	external compression force	slope K_b	stiffness of bolt
$\Delta\delta_t$	additional elongation due to external tensile force	slope K_c	stiffness of connected parts

Figure 3 — Force-elongation diagram

© ISO 2016 – All rights reserved

Documents
Document Sharing Hub
Full document details: ISO 20332-2016 (2018)

Additionally, the load path of the external compression force based upon the joint construction shall be taken into account (see Figure 4).

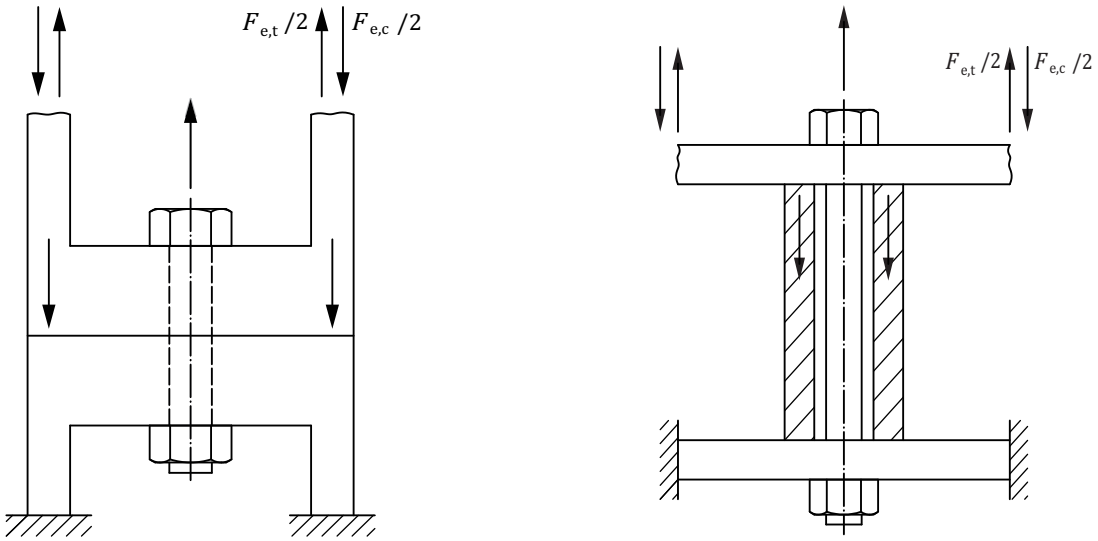

a) External compression force does not interfere with the compression zone under the bolt

b) External compression force is transferred through the compression zone under the bolt

NOTE For simplicity, a symmetric loading with the bolt in the middle is assumed.

Figure 4 — Load path alternatives for the external compression force

Two separate design limits are to be considered for the external tensile bolt force.

a) The resulting bolt force under the external force and under the maximum design preload shall not exceed the bolt yield load [see Formula (13)].

b) The connection under the external force and under the minimum design preload shall not open (gap) [see Formula (14)].

For connections loaded in tension, it shall be proven that the external tensile design force in the bolt, $F_{e,t}$, does not exceed either of the two limit design forces, $F_{t1,Rd}$ or $F_{t2,Rd}$ (see also 5.3.2).

The limit design tensile force per bolt for the bolt yield criteria is calculated from

$$F_{t1,Rd} = \frac{F_y / \gamma_{Rb} - F_{p,max}}{\Phi} \tag{13}$$

with

$$\Phi = \frac{K_b}{K_b + K_c}$$

and $\gamma_{Rb} = \gamma_m \times \gamma_{sb}$ and $F_y = f_{yb} \times A_s$

© ISO 2016 - All rights reserved

Documents Document Sharing Hub

Full document details: ISO 20332-2016 (2018)

where

F_y is the bolt yield force;

$F_{p,max}$ is the maximum value of the design preload [see Formula (15)];

f_{yb} is the yield stress of the bolt material;

A_s is the stress area of the threaded part of the bolt;

Φ is the stiffness ratio factor of the connection (see also Annex G);

γ_{sb} is the specific resistance factor for connections loaded in tension: γ_{sb} = 0,91.

A load introduction factor, α_L, may be taken into account when calculating factor Φ (see Annex G).

The limit design tensile force per bolt for the opening criteria of the connection is calculated from

$$F_{t2,Rd} = \frac{F_{p,min}}{\gamma_{Rb} \times \left(1 - \Phi\right)} \tag{14}$$

where $F_{p,min}$ is the minimum value of the design preload.

The scatter of preload is taken into account by the maximum and minimum values of the design preload as follows.

$$F_{p,max} = \left(1 + s\right) \times F_{pn} \tag{15}$$

and

$$F_{p,min} = \left(1 - s\right) \times F_{pn} \tag{16}$$

where

F_{pn} is the nominal, target value of the applied preload;

$F_{p,max}$ is the maximum value of the design preload;

$F_{p,min}$ is the minimum value of the design preload;

s is the preload scatter:

s = 0,23 where controlled tightening, rotation angle, or tightening torque is measured;

s = 0,09 where controlled tightening, force in bolt, or elongation is measured.

When several identical and equally loaded bolts are used in a connection, the scatter used for computing $F_{p,min}$ in Formula (16) may be taken as

$$s = 0,23 \big/ \sqrt{n}\,,\ s \geq 0,10$$

where controlled tightening, rotation angle, or tightening torque is measured, and

$$s = 0,09 \big/ \sqrt{n}\,,\ s \geq 0,05$$

where controlled tightening, force in bolt, or elongation is measured,

where n is the number of identical and equally loaded bolts.

© ISO 2016 – All rights reserved

Documents
Document Sharing Hub

Full document details: ISO 20332-2016 (2018)

The nominal preload, $F_{p,n}$, value shall be limited to that given in Table 6. Otherwise, any value for the preload may be chosen for a particular connection.

Table 6 — Maximum nominal preload levels in accordance with method of preloading

Types of preloading method	Maximum nominal preload level
Methods where torque is applied to the bolt	0,7 F_y
Methods where only direct tension is applied to the bolt	0,9 F_y

See Annex B for information on tightening torques.

For the calculation of the additional force in bolt, the load path of the external compression force shall be considered (see Figure 4). In a general format, the additional force in the bolt is calculated as follows.

$$\Delta F_b = \Phi \times \left(F_{e,t} + F_{e,c}\right) \tag{17}$$

where

ΔF_b is the additional force in the bolt;

Φ is the stiffness ratio factor;

$F_{e,t}$ is the external tensile force;

$F_{e,c}$ is the external compression force.

The external compression force, $F_{e,c}$, shall be omitted (i.e. set to zero in the formula) in cases where it does not interfere with the compression zone under the bolt as illustrated in Figure 4 a).

The additional force in the bolt, ΔF_b, shall be used in the proof of fatigue strength of the bolt in accordance with Clause 6.

5.2.3.4 Bearing type connections loaded in combined shear and tension

When bolts in a bearing type connection are subjected to both tensile and shear forces, the applied forces shall be limited as follows.

$$\left(\frac{F_{t,Sd}}{F_{t,Rd}}\right)^2 + \left(\frac{F_{v,Sd}}{F_{v,Rd}}\right)^2 \leq 1 \tag{18}$$

where

$F_{t,Sd}$ is the external tensile force per bolt;

$F_{t,Rd}$ is the limit tensile force per bolt (see 5.2.3.3);

$F_{v,Sd}$ is the design shear force per bolt per shear plane;

$F_{v,Rd}$ is the limit shear force per bolt per shear plane (see 5.2.3.1.2).

© ISO 2016 - All rights reserved
Documents Document Sharing Hub
Full document details: ISO 20332-2016 (2018)

5.2.4 Limit design forces in pinned connections

5.2.4.1 Pins, limit design bending moment

The limit design bending moment is calculated from

$$M_{\mathrm{Rd}} = \frac{W_{\mathrm{el}} \times f_{\mathrm{yp}}}{\gamma_{\mathrm{Rp}}} \tag{19}$$

with $\gamma_{\mathrm{Rp}} = \gamma_{\mathrm{m}} \times \gamma_{\mathrm{sp}}$

where

W_{el} is the elastic section modulus of the pin;

f_{yp} is the yield stress (minimum value) of the pin material;

γ_{sp} is the specific resistance factor for pinned connections bending moment: $\gamma_{\mathrm{sp}} = 1{,}0$

5.2.4.2 Pins, limit design shear force

The limit design shear force per shear plane for pins is calculated from

$$F_{\mathrm{v,Rd}} = \frac{1}{u} \times \frac{A \times f_{\mathrm{yp}}}{\sqrt{3} \times \gamma_{\mathrm{Rp}}} \tag{20}$$

with $\gamma_{\mathrm{Rp}} = \gamma_{\mathrm{m}} \times \gamma_{\mathrm{sp}}$

where

u is the shape factor:

$u = \frac{4}{3}$ for solid pins;

$u = \frac{4}{3} \times \frac{1 + \nu_{\mathrm{D}} + \nu_{\mathrm{D}}^{2}}{1 + \nu_{\mathrm{D}}^{2}}$ for hollow pins:

where $\nu_{\mathrm{D}} = \frac{D_{\mathrm{i}}}{D_{\mathrm{o}}}$

D_{i} is the inner diameter of pin;

D_{o} is the outer diameter of pin;

A is the cross-sectional area of the pin;

γ_{sp} is the specific resistance factor for shear force in pinned connections:

$\gamma_{\mathrm{sp}} = 1{,}0$ for multiple shear plane connections;

$\gamma_{\mathrm{sp}} = 1{,}3$ for single shear plane connections.

5.2.4.3 Pins and connected parts, limit design bearing force

The limit design bearing force is calculated from

© ISO 2016 – All rights reserved

Documents
Document Sharing Hub
Full document details: ISO 20332-2016 (2018)

$$F_{b,Rd} = \frac{\alpha \times d \times t \times f_y}{\gamma_{Rp}} \tag{21}$$

with $\gamma_{Rp} = \gamma_m \times \gamma_{sp}$

where

$$\alpha = \text{Min}\begin{cases} \dfrac{f_{yp}}{f_y} \\ 1,0 \end{cases}$$

f_y is the yield stress (minimum value) of the material of the connected parts;

f_{yp} is the yield stress (minimum value) of the pin material;

d is the diameter of the pin;

t is the lesser value of the thicknesses of the connected parts, i.e. $2 \cdot t_1$ or t_2, as shown in Figure 5;

γ_{sp} is the specific resistance factor for the bearing force in pinned connections:

$\gamma_{sp} = 0,6$ when connected parts in multiple shear plane connections are held firmly together by retaining means such as external nuts on the pin ends;

$\gamma_{sp} = 0,9$ for single shear plane connections or when connected parts in multiple shear plane connections are not held firmly together.

In case of significant movement between the pin and the bearing surface, consideration should be given to reducing the limit bearing force in order to reduce wear.

In case of reversing load, consideration should be given to the avoidance of excessive play in the connection.

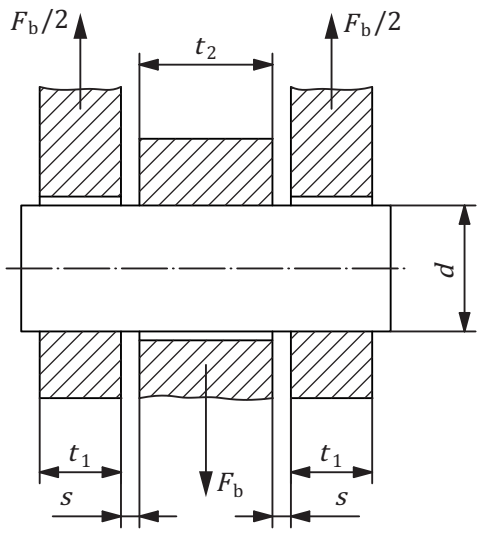

Figure 5 — Pinned connections

© ISO 2016 - All rights reserved
Documents Document Sharing Hub
Full document details: ISO 20332-2016 (2018)