INTERNATIONAL STANDARD

ISO 21009-1

Second edition
2022-08

Cryogenic vessels — Static vacuum-insulated vessels —

Part 1: Design, fabrication, inspection and tests

Récipients cryogéniques — Récipients isolés sous vide statiques —

Partie 1: Exigences de conception de fabrication, d'inspection, et d'essais

Reference number
ISO 21009-1:2022(E)

Documents
Document Sharing Hub

© ISO 2022

Full document details: ISO 21009-1-2022

COPYRIGHT PROTECTED DOCUMENT

© ISO 2022

All rights reserved. Unless otherwise specified, or required in the context of its implementation, no part of this publication may be reproduced or utilized otherwise in any form or by any means, electronic or mechanical, including photocopying, or posting on the internet or an intranet, without prior written permission. Permission can be requested from either ISO at the address below or ISO's member body in the country of the requester.

ISO copyright office
CP 401 • Ch. de Blandonnet 8
CH-1214 Vernier, Geneva
Phone: +41 22 749 01 11
Email: copyright@iso.org
Website: www.iso.org

Published in Switzerland

© ISO 2022 – All rights reserved

Documents
Document Sharing Hub

Full document details: ISO 21009-1-2022

Contents

Page

Foreword ... **v**

1 Scope ... **1**

2 Normative references ... **1**

3 Terms and definitions ... **2**

4 Symbols ... **5**

5 General requirements ... **7**

6 Mechanical loads ... **7**
6.1 General ... 7
6.2 Load during the pressure test ... 8

7 Chemical effects ... **8**

8 Thermal conditions ... **8**

9 Material ... **9**
9.1 General ... 9
9.2 Selection of materials ... 9
9.3 Inspection certificate ... 9
9.4 Materials for outer jackets and service equipment ... 9

10 Design ... **9**
10.1 Design options ... 9
10.1.1 General ... 9
10.1.2 Design by calculation ... 9
10.1.3 Design by calculation when adopting pressure strengthening (if allowed) ... 10
10.1.4 Design of components by calculation supplemented with experimental methods ... 10
10.2 Common design requirements ... 10
10.2.1 General ... 10
10.2.2 Design specification and documentation ... 10
10.2.3 Design loads ... 11
10.2.4 Inspection openings ... 14
10.2.5 Pressure relief ... 14
10.2.6 Valves ... 16
10.2.7 Filling ratio ... 16
10.2.8 Electrical continuity ... 16
10.3 Design by calculation ... 16
10.3.1 General ... 16
10.3.2 Inner vessel ... 16
10.3.3 Outer jacket ... 18
10.3.4 Supports and lifting points ... 20
10.3.5 Piping and accessories ... 20
10.3.6 Calculation formulae ... 20
10.3.7 Calculations for operating loads ... 27

11 Fabrication ... **48**
11.1 General ... 48
11.2 Cutting ... 48
11.3 Cold forming ... 49
11.3.1 Austenitic stainless steel ... 49
11.3.2 Ferritic steel ... 49
11.4 Hot forming ... 50
11.4.1 General ... 50
11.4.2 Austenitic stainless steel ... 50
11.4.3 Ferritic steel ... 50

© ISO 2022 – All rights reserved

AVA Documents
Document Sharing Hub

Full document details: ISO 21009-1-2022

11.5 Manufacturing tolerances ... 52
11.5.1 General ... 52
11.5.2 Plate alignment ... 53
11.5.3 Thickness ... 53
11.5.4 Dished ends ... 53
11.5.5 Cylinders ... 53
11.6 Welding ... 55
11.6.1 General ... 55
11.6.2 Qualification ... 55
11.6.3 Temporary attachments ... 55
11.6.4 Welded joints ... 56
11.7 Non-welded permanent joints ... 56

12 Inspection and testing ... 57
12.1 Quality plan ... 57
12.1.1 General ... 57
12.1.2 Inspection stages during manufacture of an inner vessel ... 57
12.1.3 Additional inspection stages during manufacture of a static cryogenic vessel ... 57
12.2 Production control test plates ... 58
12.2.1 Requirements ... 58
12.2.2 Extent of testing ... 58
12.3 Non-destructive testing ... 59
12.3.1 General ... 59
12.3.2 Extent of examination for surface imperfections ... 59
12.3.3 Extent of examination for weld imperfections ... 59
12.3.4 Acceptance levels ... 60
12.4 Rectification ... 61
12.4.1 General ... 61
12.4.2 Manually welded seams ... 61
12.4.3 Seams produced using automatic welding processes ... 61
12.5 Pressure testing ... 61

13 Marking and labelling ... 62

14 Final assessment ... 63

15 Periodic inspection ... 63

Annex A (normative) **Elastic stress analysis ... 64**

Annex B (normative) **Additional requirements for 9 % Ni steel ... 73**

Annex C (normative) **Pressure strengthening of vessels from austenitic stainless steels ... 75**

Annex D (informative) **Pressure limiting systems ... 88**

Annex E (normative) **Further use of the material cold properties to resist pressure loads ... 89**

Annex F (informative) **Specific weld details ... 93**

Annex G (normative) **Additional requirements for flammable fluids ... 97**

Annex H (informative) **Flammable gas vents and relief systems ... 98**

Annex I (normative) **Outer jacket relief devices ... 99**

Annex J (normative) **Increased material property for austenitic stainless steel ... 100**

Annex K (informative) **Base materials ... 101**

Annex L (normative) **Cylindrical shells and dished ends subject to external pressure(pressure on the convex surface) — Calculation ... 109**

Annex M (normative) **Design of openings in cylinders, spheres and cones — Calculation ... 114**

Annex N (normative) **Design of ends for internal pressure ... 123**

Bibliography ... 125

© ISO 2022 – All rights reserved

Documents
Document Sharing Hub
Full document details: ISO 21009-1-2022

Foreword

ISO (the International Organization for Standardization) is a worldwide federation of national standards bodies (ISO member bodies). The work of preparing International Standards is normally carried out through ISO technical committees. Each member body interested in a subject for which a technical committee has been established has the right to be represented on that committee. International organizations, governmental and non-governmental, in liaison with ISO, also take part in the work. ISO collaborates closely with the International Electrotechnical Commission (IEC) on all matters of electrotechnical standardization.

The procedures used to develop this document and those intended for its further maintenance are described in the ISO/IEC Directives, Part 1. In particular, the different approval criteria needed for the different types of ISO documents should be noted. This document was drafted in accordance with the editorial rules of the ISO/IEC Directives, Part 2 (see www.iso.org/directives).

Attention is drawn to the possibility that some of the elements of this document may be the subject of patent rights. ISO shall not be held responsible for identifying any or all such patent rights. Details of any patent rights identified during the development of the document will be in the Introduction and/or on the ISO list of patent declarations received (see www.iso.org/patents).

Any trade name used in this document is information given for the convenience of users and does not constitute an endorsement.

For an explanation of the voluntary nature of standards, the meaning of ISO specific terms and expressions related to conformity assessment, as well as information about ISO's adherence to the World Trade Organization (WTO) principles in the Technical Barriers to Trade (TBT), see www.iso.org/iso/foreword.html.

This document was prepared by Technical Committee ISO/TC 220, *Cryogenic vessels*.

This second edition cancels and replaces the first edition (ISO 21009-1:2008), which has been technically revised.

The main changes are as follows:

— correction of the formulae;

— Clauses 11 and 12 have been revised;

— Annex C has been aligned with the modification performed in the other ISO/TC 220 design standards.

A list of all parts in the ISO 21009 series can be found on the ISO website.

Any feedback or questions on this document should be directed to the user's national standards body. A complete listing of these bodies can be found at www.iso.org/members.html.

© ISO 2022 – All rights reserved

Documents
Document Sharing Hub
Full document details: ISO 21009-1-2022

Documents
Document Sharing Hub

Full document details: ISO 21009-1-2022

Cryogenic vessels — Static vacuum-insulated vessels —

Part 1:
Design, fabrication, inspection and tests

1 Scope

This document specifies requirements for the design, fabrication, inspection and testing of static vacuum-insulated cryogenic vessels designed for a maximum allowable pressure of more than 0,5 bar.

This document applies to static vacuum-insulated cryogenic vessels for fluids and does not apply to vessels designed for toxic fluids.

This document also gives guidance for static vacuum-insulated cryogenic vessels designed for a maximum allowable pressure of not more than 0,5 bar.

2 Normative references

The following documents are referred to in the text in such a way that some or all of their content constitutes requirements of this document. For dated references, only the edition cited applies. For undated references, the latest edition of the referenced document (including any amendments) applies.

ISO 4126-2, *Safety devices for protection against excessive pressure — Part 2: Bursting disc safety devices*

ISO 4136, *Destructive tests on welds in metallic materials — Transverse tensile test*

ISO 9016, *Destructive tests on welds in metallic materials — Impact tests — Test specimen location, notch orientation and examination*

ISO 9328-4, *Steel flat products for pressure purposes — Technical delivery conditions — Part 4: Nickel-alloy steels with specified low temperature properties*

ISO 9606-1, *Qualification testing of welders — Fusion welding — Part 1: Steels*

ISO 9712, *Non-destructive testing — Qualification and certification of NDT personnel*

ISO 10474:2013, *Steel and steel products — Inspection documents*

ISO 14732, *Welding personnel — Qualification testing of welding operators and weld setters for mechanized and automatic welding of metallic materials*

ISO 15613, *Specification and qualification of welding procedures for metallic materials — Qualification based on pre-production welding test*

ISO 15614-1:2017, *Specification and qualification of welding procedures for metallic materials — Welding procedure test — Part 1: Arc and gas welding of steels and arc welding of nickel and nickel alloys*

ISO 17636-1, *Non-destructive testing of welds — Radiographic testing of fusion-welded joints — Part 1: X- and gamma-ray techniques with film*

ISO 17636-2, *Non-destructive testing of welds — Radiographic testing of fusion-welded joints — Part 2: X- and gamma-ray techniques with digital detectors*

ISO 21009-2, *Cryogenic vessels — Static vacuum insulated vessels — Part 2: Operational requirements*

ISO 21010, *Cryogenic vessels — Gas/material compatibility*

Documents
Document Sharing Hub

© ISO 2022 – All rights reserved

Full document details: ISO 21009-1-2022

ISO 21011, *Cryogenic vessels — Valves for cryogenic service*

ISO 21013-3, *Cryogenic vessels — Pressure-relief accessories for cryogenic service — Part 3: Sizing and capacity determination*

ISO 21028-1, *Cryogenic vessels — Toughness requirements for materials at cryogenic temperature — Part 1: Temperatures below -80 degrees C*

ISO 21028-2, *Cryogenic vessels — Toughness requirements for materials at cryogenic temperature — Part 2: Temperatures between -80 degrees C and -20 degrees C*

ISO 23208, *Cryogenic vessels — Cleanliness for cryogenic service*

EN 13445-3, *Unfired pressure vessels — Design*

ASME *Boiler and Pressure Vessel Code, Section VIII, Division 2: Alternative Rules*

3 Terms and definitions

For the purposes of this document, the following terms and definitions apply.

ISO and IEC maintain terminology databases for use in standardization at the following addresses:

— ISO Online browsing platform: available at https://www.iso.org/obp

— IEC Electropedia: available at https://www.electropedia.org/

3.1
accessories
service equipment which has a safety-related function with respect to either pressure containment or control or both

EXAMPLE Protective or limiting devices, controlling and monitoring devices, valves and indicators.

3.2
automatic welding
welding in which all operations are performed without welding operator intervention during the process

Note 1 to entry: Manual adjustment of welding variables by the welding operator during welding is not possible.

[SOURCE: ISO 14732:2013, 3.1]

3.3
bursting disc device
non-reclosing pressure relief device ruptured by differential pressure

Note 1 to entry: The bursting disc device is the complete assembly of installed components including, where appropriate, the bursting disc holder.

3.4
cryogenic fluid
refrigerated liquefied gas
gas which is partially liquid because of its low temperature

Note 1 to entry: This includes totally evaporated liquids and supercritical fluids.

Note 2 to entry: In the ISO 21009 series, the refrigerated, but non-toxic gases, and mixtures of them, shown in Table 1, are referred to as cryogenic fluids.

© ISO 2022 – All rights reserved
Documents
Document Sharing Hub
Full document details: ISO 21009-1-2022

Table 1 — Refrigerated but non-toxic gases

Classification code	Identification number, name and description
3° A	Asphyxiant gases 1 913 Neon, refrigerated liquid 1 951 Argon, refrigerated liquid 1 963 Helium, refrigerated liquid 1 970 Krypton, refrigerated liquid 1 977 Nitrogen, refrigerated liquid 2 187 Carbon dioxide, refrigerated liquid 2 591 Xenon, refrigerated liquid 3 136 Trifluoromethane, refrigerated liquid 3 158 Gas, refrigerated liquid, not otherwise specified (NOS)
3° O	Oxidizing gases 1 003 Air, refrigerated liquid 1 073 Oxygen, refrigerated liquid 2 201 Nitrous oxide, refrigerated liquid, oxidizing 3 311 Gas, refrigerated liquid, oxidizing, NOS
3° F	Flammable gases 1 038 Ethylene, refrigerated liquid 1 961 Ethane, refrigerated liquid 1 966 Hydrogen, refrigerated liquid 1 972 Methane, refrigerated liquid or natural gas, refrigerated liquid, with high methane content 3 138 Ethylene, acetylene and propylene mixture, refrigerated liquid, containing at least 71,5 % ethylene with not more than 22,5 % acetylene and not more than 6 % propylene 3 312 Gas, refrigerated liquid, flammable, NOS
The flammable gases, and mixtures of them, may be mixed with: helium, neon, nitrogen, argon, carbon dioxide. Oxidizing and flammable gases shall not be mixed. NOTE The classification code, identification number, name and description are according to UN codes.	

3.5
documentation
technical documents delivered by the manufacturer to the owner

Note 1 to entry: Documentation consists of:

— all certificates establishing the conformity with this document (e.g. material, pressure test, cleanliness, safety devices);

— a short description of the vessel (e.g. including characteristic data);

— a list of fluids and their net mass for which the cryogenic vessel is designed;

— an operating manual (for the user) that contains:

  — a short description of the vessel (e.g. including characteristic data),

  — a statement that the vessel is in conformity with this document, and

  — the instructions for *normal operation* (3.10).

© ISO 2022 – All rights reserved

Documents
Document Sharing Hub
Full document details: ISO 21009-1-2022

3.6
gross volume
<*inner vessel*> (3.7) internal volume of the inner vessel determined at minimum design temperature and atmospheric pressure

3.7
inner vessel
pressure vessel intended to contain the *cryogenic fluid* (3.4) to be stored

3.8
manufacturer of the static cryogenic vessel
company that carries out the final assembly, including the final acceptance test, of the *static cryogenic vessel* (3.17)

3.9
maximum allowable pressure
maximum *pressure* (3.13) permissible at the top of the vessel in its normal operating position

3.10
normal operation
intended operation of the vessel either up to the *maximum allowable pressure* (3.9) or subjected to handling loads

Note 1 to entry: Handling loads are exerted on the *static cryogenic vessel* (3.17) in all normal transport operations including, e.g. loading, unloading, pressure loading during transportation, installation.

3.11
outer jacket
gas-tight enclosure which contains the *inner vessel* (3.7) and enables the vacuum to be established

3.12
piping system
tubes, pipes and associated components which can come in contact with *cryogenic fluids* (3.4) including valves, fittings, pressure relief devices, and their supports

3.13
pressure
gauge pressure
pressure relative to atmospheric pressure

3.14
pressure strengthened vessel
pressure vessel, which has been subjected to a calculated and controlled internal pressure (strengthening pressure) after completion

Note 1 to entry: The wall thickness of such a vessel is calculated on the basis of the stress at the strengthening pressure and not on the basis of the conventional design stress value of the material used.

Note 2 to entry: Pressure vessels made from solution heat treated material will be subject to a controlled plastic deformation during the strengthening operation as its yield point is raised. Pressure vessels made from work-hardened material will be subject to little or no plastic deformation.

3.15
relief plate
plate retained by atmospheric pressure which allows relief of excess internal pressure, generally from the vacuum jacket

© ISO 2022 – All rights reserved
Documents
Document Sharing Hub
Full document details: ISO 21009-1-2022

3.16
service equipment
accessories, equipment or instruments that will be used to measure the level, to fill or discharge the tank, to vent the tank, to protect the tank against overpressure and to raise the tank pressure and its thermal insulation

Note 1 to entry: The thermal insulation is a vacuum inter-space between the *inner vessel* (3.7) and the *outer jacket* (3.11).

3.17
static cryogenic vessel
thermally insulated vessel intended for use with one or more *cryogenic fluids* (3.4) in a stationary condition

Note 1 to entry: Static cryogenic vessels consist of *inner vessel(s)* (3.7), an *outer jacket* (3.11) and the *piping system* (3.12).

4 Symbols

A	cross sectional area of reinforcing element	mm^2
A	area of reinforcing ring	mm^2
A_s	elongation at fracture	%
b	width of pad, ring or shell reinforcement	mm
C_β	design factors	—
c	allowances for corrosion	mm
D	shell diameter	mm
D_a	outside diameter e.g. of a cylindrical shell	mm
D_{a1}	outside diameter of connected cylinder (see Figure 7)	mm
D_{a2}	outside diameter at effective stiffening (see Figure 9)	mm
D_1, D_2	flat end diameters	mm
D_i	internal diameter e.g. of a cylindrical shell	mm
D_k	design diameter (see Figure 7)	mm
D_s	shell diameter at nozzle (see Figure 8)	mm
d_a	outside diameter of tube or nozzle	mm
d_i	diameter of opening	mm
d_1, d_2	opening diameter	mm
E	Young's modulus	N/mm^2
f	narrow side of rectangular or torispherical plate	mm
H	Safety coefficient for pressure test	—
h	thickness of pad-reinforcement	mm

© ISO 2022 – All rights reserved

Documents
Document Sharing Hub
Full document details: ISO 21009-1-2022

I	moment of inertia of reinforcing element	mm^4
K	material property used for design (see 10.3.2.3.1)	N/mm^2
K_t	material property at t °C used for design (e.g. K_{20} for material property at 20 °C) (see 10.3.2.3.2)	N/mm^2
L	cone length between effective stiffenings (see Figure 9)	mm
l	ligament (web) between two nozzles	mm
l_b	buckling length	mm
l'_s	length of nozzle reinforcement outstandings	mm
l_s	length of nozzle reinforcement in stand	mm
m	protruding length of nozzle	mm
n	number	—
p	design pressure as defined by 10.2.3.2.1 and 10.3.3.2	bar (or MPa)
p_e	external pressure	bar (or MPa)
p_{e1}	allowable external pressure limited by elastic buckling	bar (or MPa)
p_{e2}	allowable external pressure limited by elastic buckling including reinforcement	bar (or MPa)
p_k	strengthening pressure	bar (or MPa)
p_p	allowable external pressure limited by plastic deformation	bar (or MPa)
p_s	maximum allowable gauge pressure	bar (or MPa)
p_T	test pressure [see 10.2.3.2.3]	bar (or MPa)
R	radius of curvature e.g. inside crown radius of dished end	mm
r	inside radius of knuckle	mm
S	safety factor at design pressure	—
S_k	safety factor against elastic buckling at design pressure	—
S_p	safety factor against plastic deformation at design pressure	—
S_T	safety factor against plastic deformation at proof test pressure	—
s	minimum wall thickness	mm
s_A	required wall thickness at opening edge	mm
s_e	actual wall thickness	mm
s_g	required wall thickness outside corner area	mm
s_l	required wall thickness within corner area	mm
s_S	wall thickness of nozzle	mm

© ISO 2022 – All rights reserved
Documents
Document Sharing Hub
Full document details: ISO 21009-1-2022

T	temperature	°C
t	wall thickness of nozzle	mm
u	out-of-roundness	—
V	factor indicative of the utilization of the permissible design stress in joints or factor allowing for weakenings	—
ν	Poisson ratio	—
x	(decay-length zone) distance over which governing stress is assumed to act	mm
x_i	characteristic lengths (i = 1,2,3) to define corner area [Figures 7 a) and b) and 10.3.6.5.4]	mm
Z	auxiliary value	—
φ	cone angle	°
σ_k	design stress value	N/mm^2

5 General requirements

5.1 The static cryogenic vessel shall safely withstand the mechanical and thermal loads and the chemical effects encountered during pressure test and normal operation. These requirements are deemed to be satisfied if Clauses 6 through 11 are fulfilled. The vessel shall be tested in accordance with Clause 12, marked in accordance with Clause 13, and operated in accordance with ISO 21009-2.

5.2 Static cryogenic vessels shall be equipped with valves, pressure relief devices, etc., configured and installed in such a way that the vessel can be operated safely. The number of openings in the inner vessel for this equipment shall be kept to a minimum.

5.3 The static cryogenic vessel shall be clean for the intended service in accordance with ISO 23208.

5.4 The manufacturer shall retain the documentation, and all supporting documents (including those from subcontractors, if any), taking legal compliance into consideration (e.g. product liability). In addition, the manufacturer shall retain all supporting and background documents (including those from subcontractors, if any) which establish that the vessel conforms to this document.

6 Mechanical loads

6.1 General

The static cryogenic vessel shall resist the mechanical loads mentioned in this clause without such deformation which can affect safety and which can lead to leakage.

The mechanical loads to be considered are:

— loads exerted during the pressure test as specified in 6.2;

— loads imposed during installation and removal of the vessel;

— dynamic loads during transport of the vessel.

© ISO 2022 – All rights reserved

Documents
Document Sharing Hub
Full document details: ISO 21009-1-2022

The following loads shall be considered to act in combination where relevant:

— a pressure equal to the maximum allowable pressure in the inner vessel and pipework;

— the pressure exerted by the liquid when filled to capacity;

— loads produced by the thermal movement of the inner vessel, outer jacket and inter-space piping;

— full vacuum in the outer jacket;

— a pressure in the outer jacket equal to the set pressure of the relief device protecting the outer jacket;

— mass of vessel when filled to capacity;

— wind loads and other site conditions (e.g. seismic loads, thermal loads) to the vessel when filled to capacity.

6.2 Load during the pressure test

The load exerted during the pressure test used for calculation shall be:

$$p_T \geq H(p_s + 1) \text{ bar or } [p_T \geq H(p_s + 0{,}1) MPa]$$

where

H is 1,43 in Europe and 1,3 in North America and for other parts of the world, a value consistent with the applicable pressure vessel code;

+ 1 (in bar) or [+0,1 (in MPa)] is the allowance for external vacuum.

7 Chemical effects

Due to operating temperatures and the materials of construction, the possibility of chemical action on the inner surfaces in contact with the cryogenic fluids can be discounted.

Due to the fact that the inner vessel is inside an evacuated outer jacket, neither external corrosion of the inner vessel, nor corrosion on the inner surfaces of the outer jacket will occur. Therefore, inspection openings are not required in the inner vessel or the outer jacket.

Corrosion allowance is also not required on surfaces in contact with the operating fluid or exposed to the vacuum inter-space between the inner vessel and the outer jacket.

The material and the protection for the surfaces exposed to the atmosphere shall be suitable for intended use (e.g. resistant to industrial and marine atmospheres).

8 Thermal conditions

The following thermal conditions shall be taken into account:

a) for the inner vessel and its associated equipment, the full range of temperatures expected;

b) for the outer jacket and equipment thereof [other equipment than covered by a)]:

— a minimum working temperature of –20 °C, unless otherwise specified and marked in accordance with Clause 13;

— a maximum working temperature of 50 °C.

© ISO 2022 – All rights reserved
Documents
Document Sharing Hub
Full document details: ISO 21009-1-2022

9 Material

9.1 General

The materials used to manufacture the inner vessels and associated equipment shall meet the requirements defined in 9.2 through 9.3.

9.2 Selection of materials

9.2.1 Materials which are or might be in contact with cryogenic fluids shall be in accordance with ISO 21010.

9.2.2 Materials used at low temperatures shall follow the requirements of the relevant ISO 21028-1 and ISO 21028-2; non-metallic materials shall be suitable for operating temperatures and the refrigerated gas.

9.2.3 The base materials, listed in Annex K, subject to meeting the extra requirements given in the main body of this document, are suitable for and may be employed in the manufacture of the cryogenic vessels conforming to this document.

9.3 Inspection certificate

9.3.1 The head and shell material shall be declared by an "inspection certificate 3.1", in accordance with ISO 10474:2013, 5.1, or "inspection certificate 3.2", in accordance with ISO 10474:2013, 5.2, if a specific manufacture qualification is not available.

9.3.2 The material manufactured to a recognized document shall be declared by an "inspection certificate 3.1", in accordance with ISO 10474:2013, 5.1, or "inspection certificate 3.2", in accordance with ISO 10474:2013, 5.2, if a specific manufacture qualification is not available.

9.4 Materials for outer jackets and service equipment

The outer jacket and the service equipment not subjected to cryogenic temperature shall be manufactured from material suitable for the intended service.

10 Design

10.1 Design options

10.1.1 General

The design shall be carried out in accordance with one of the options given in 10.1.2, 10.1.3 or 10.1.4.

In the case of 9 % Ni steel, the additional requirements of Annex B shall be satisfied.

For metallic materials used at cryogenic temperatures, the requirements of ISO 21028-1 and ISO 21028-2 shall be satisfied.

When further use of cold properties is allowed, the requirements of Annex E shall be satisfied.

10.1.2 Design by calculation

Calculation of all pressure and load bearing components shall be carried out. The pressure part thicknesses of the inner vessel and outer jacket shall not be less than required by 10.3. Additional

© ISO 2022 – All rights reserved

Documents
Document Sharing Hub
Full document details: ISO 21009-1-2022

calculations may be required to ensure the design is satisfactory for the operating conditions including an allowance for external loads (e.g. seismic).

10.1.3 Design by calculation when adopting pressure strengthening (if allowed)

The pressure retaining capability of inner vessels manufactured from austenitic stainless steel, strengthened by pressure, shall be calculated in accordance with Annex C. In some cases, it is possible that designs adopting pressure strengthening will not be allowed by the competent authorities where the vessel is to be operated.

10.1.4 Design of components by calculation supplemented with experimental methods

Where it is not possible to design non-inner-vessel components by calculation alone, planned and controlled experimental means may be used, provided that the results confirm the safety factors required in 10.3. An example would be the application of strain gauges to assess stress levels.

10.2 Common design requirements

10.2.1 General

The requirements of 10.2.2 through 10.2.8 are applicable to all vessels irrespective of the design option used.

In the event of an increase in any one of the following parameters, the initial design process shall be repeated:

— maximum allowable pressure;

— specific mass (density) of the densest gas for which the vessel is designed;

— maximum tare weight of the inner vessel;

— nominal length or diameter, or both, of the inner shell;

or, in the event of any change relative to:

— the type of material or grade (e.g. stainless steel or change of stainless steel grade);

— the fundamental shape;

— the decrease in the minimum mechanical properties of the material being used; or

— the modification of the design of an assembly method concerning any part under stress, particularly as far as the support systems between the inner vessel and the outer jacket or the inner vessel itself or the protective frame, if any, are concerned.

10.2.2 Design specification and documentation

To enable the design to be prepared, the following information shall be available:

— maximum allowable pressure;

— fluids intended to be contained;

— gross volume of the inner vessel;

— configuration;

— location of fastening points and loads allowable on these points;

— method of handling and securing during transit and site erection;

© ISO 2022 – All rights reserved
Documents
Document Sharing Hub
Full document details: ISO 21009-1-2022

— site conditions (e.g. ambient temperatures, seismic);

— shipping modes (e.g. road, rail, water) of the empty vessel;

— filling and emptying rates;

— range of ambient temperatures, if different from 8 b);

— gross mass;

— details of fastenings in combination with the expected loads from the vessel itself.

A design document in the form of drawings with text if any shall be prepared. It shall contain the information given above plus the following where applicable:

— definition of which components are designed by calculation, by pressure strengthening, by experiment and by satisfactory in-service experience;

— drawings with dimensions and thicknesses of load bearing components;

— specification of all load bearing materials, e.g. grade, class, temper, testing, as relevant;

— applicable material test certificates;

— location and details of, e.g. welds and other joints, welding and other joining procedures, filler, joining materials, as relevant;

— calculations to verify conformance to this document;

— design test programme;

— non-destructive testing requirements;

— pressure test requirements;

— piping configuration including type, size and location of all valves and relief devices;

— details of lifting points and lifting procedure;

— calculations for wind and seismic loads.

10.2.3 Design loads

10.2.3.1 General

Under normal operating conditions, static vessels are not expected to see pressure variations.

If the static vessel is specifically intended for more than 4 000 pressure cycles, fatigue life shall be calculated in accordance with an internationally recognized standard.

NOTE 1 A pressure cycle is defined as a pressure variation more than 50 % of the design pressure for austenitic stainless steels and 20 % for the other materials.

The static cryogenic vessel shall be able to safely withstand the mechanical and thermal loads encountered during normal operation, transportation and pressure test, as specified in 10.2.3.2 through 10.2.3.7.

If a detailed fatigue life calculation is required, the evaluation shall be conducted according to EN 13445-3, ASME VIII-2 or equivalent standards/codes under consideration of the imperfections under 11.5 and 12.3.4.

© ISO 2022 – All rights reserved

Documents
Document Sharing Hub
Full document details: ISO 21009-1-2022

Information about the fatigue life shall be reported to the users in the operating manual.

NOTE 2 Fatigue analysis can be satisfied for existing designs through documented evidence of previous long-term satisfactory service under the same operating conditions.

10.2.3.2 Inner vessel

10.2.3.2.1 The following loads shall be considered to act in the combinations specified in 10.2.3.2.2.

a) Pressure during operation when the vessel contains cryogenic liquid product:

$$p_{CL} = p_s + p_L + 1 \text{ bar or } [\, p_{CL} = p_s + p_L + 0{,}1\ MPa \,]$$

where p_L is the pressure exerted by the weight of the liquid contents when the vessel is filled to capacity with either:

i) boiling liquid at atmospheric pressure, or

ii) cryogenic fluid at its equilibrium triple point or melting point temperature at atmospheric pressure

[p_L is neglected if less than 5 % of (p_s + 1). If p_L is greater than 5 % of (p_s + 1), it is permissible to reduce the value by 5 % of (p_s + 1)].

b) Pressure during operation when the vessel contains only gaseous product at 20 °C:

$$p_{CG} = p_s + 1 \text{ bar or } [\, p_{CG} = p_s + 0{,}1\ MPa \,]$$

NOTE 1 This formula applies only if Annex E is used.

c) Reactions at the support points of the inner vessel during operation when the vessel contains cryogenic liquid product. The reactions shall be determined by the weight of the inner vessel, the weight of the maximum contents of the cryogenic liquid and vapour and seismic loadings where appropriate. The seismic loadings shall include any forces exerted on the vessel by the insulation.

d) Reactions at the support points of the inner vessel during operation when the vessel contains only gaseous product at 20 °C. The reactions shall be determined by the weight of the inner vessel, its contents and seismic loadings where appropriate. The seismic loadings shall include any forces exerted on the vessel by the insulation.

NOTE 2 This condition applies only if Annex E is used.

e) Load imposed by the piping due to the differential thermal movement of the inner vessel, the piping and the outer jacket, where the following cases shall be considered:

— cooldown (inner vessel warm – piping cold);

— filling and withdrawal (inner vessel cold – piping cold);

— storage (inner vessel cold – piping warm);

f) Load imposed on the inner vessel at its support points when cooling from ambient to operating temperature.

g) Loads imposed during transit and site erection.

NOTE 3 The static cryogenic vessel is not intended to be transported filled. It can be transported empty or containing marginal residues of cryogenic fluid from one location to another.

h) Load imposed by pressure in annular space equal to the set pressure of the outer jacket relief device and atmospheric pressure in inner vessel.

© ISO 2022 – All rights reserved
Documents
Document Sharing Hub
Full document details: ISO 21009-1-2022

10.2.3.2.2 The vessel shall be capable of withstanding the following combinations of loadings from 10.2.3.2.1. The design pressure, p, is equal to pressure specified therein, in each combination 1, 2 and 3:

1) operation at maximum allowable working pressure when vessel is filled with cryogenic liquid: 10.2.3.2.1 a) + c) + e) + f);

2) operation at maximum allowable working pressure when vessel is filled with gas at 20 °C: b) + d);

3) pressure test: see 10.2.3.2.3;

4) shipping and lifting: 10.2.3.2.1 g);

5) vessel subject to external pressure developed in the vacuum jacket: 10.2.3.2.1 h).

The inner vessel shall, in addition, be capable of holding the pressure test fluid without gross plastic deformation.

10.2.3.2.3 The design shall be evaluated for the following conditions:

Pressure test: the value used for design purposes shall be the higher of:

$$p_{\mathrm{T}} = H\ (p_s + 1)\ \text{bar [or } p_{\mathrm{T}} = H\ (p_s + 0{,}1)\ \text{MPa] or see 12.5.1 or}$$

$$p_{\mathrm{T}} = 1{,}25\ (p_s + p_L + 1)\ \frac{K_{20}}{K_t}\ bar\ [\text{or } p_{\mathrm{T}} = 1{,}25\ (p_s + p_L + 0{,}1)\ \frac{K_{20}}{K_t}\ MPa\ ]$$

considered for each element of the vessel, e.g. shell, courses, head.

The 1 bar (or 0,1 MPa) is added to allow for the external vacuum.

NOTE 1 H is equal to 1,43 in Europe and 1,3 in North America and for other parts of the world, a value consistent with the applicable pressure vessel code.

NOTE 2 When cold properties are used, see Annex E where K_{design} is used instead of K_t.

10.2.3.3 Outer jacket

The following loads shall be considered to act in combination where relevant:

a) an external pressure of 1 bar (or 0,1 MPa);

b) an internal pressure equal to the set pressure of the outer jacket pressure relief device;

c) load imposed by the supporting systems in the outer jacket taking into consideration site conditions, e.g. wind and seismic loadings;

d) load imposed by piping as defined in 10.2.3.2.1 e);

e) load imposed at the inner vessel support points in the outer jacket when the inner vessel cools from ambient to operating temperature and during operation;

f) loads imposed during transit and site erection;

g) external loads from, e.g. wind, seismic or other site conditions;

h) gross mass.

10.2.3.4 Inner vessel supports

The inner vessel supports shall be designed for the load specified in 10.2.3.2.1 c) and f) to a maximum allowable stress value which is equal to 0,66 K_{20}. Additionally, this maximum stress value shall not be

© ISO 2022 – All rights reserved

Documents
Document Sharing Hub
Full document details: ISO 21009-1-2022

exceeded during shipping with loads of 1,7 g down, 1 g upwards and laterally and 2 g in the direction of the travel based on an empty vessel.

10.2.3.5 Outer jacket supports

The outer jacket supports shall be suitable for the load defined in 10.2.3.3 to a maximum allowable stress value equal to 0,66 K_{20}. Compressive stresses and stability shall be considered, see for example EN 13445-3 and ASME CODE CASE 2286-5 in combination with AISC Manual of Steel Construction 15th edition. The load conditions and combinations shall take into consideration the applicable regulations of the countries of use.

10.2.3.6 Lifting points

Lifting points shall be suitable for lifting loads under consideration of the load direction initiated of the self-load of the static cryogenic vessel and 10.3.4, which are lifted in accordance with the specified procedure under taking into account of a maximum allowable stress value equal to 0,66 K_{20}.

NOTE The maximum self-load corresponds to the weight of the entire non-corroded pressure vessel, including e.g. fittings (floors, packs), insulation, fire protection, pipelines, catwalks and ladders.

10.2.3.7 Piping and accessories

Piping including valves, fittings and supports shall be designed for the following loads, which shall be considered to act in combination where relevant:

a) Pressure during operation: not less than the set pressure of the system pressure relief devices, e.g. set pressure of the thermal relief device.

b) Thermal loads defined in 10.2.3.2.1 f).

c) Loads generated during pressure relief discharge.

d) A design pressure not less than the maximum allowable pressure, p_s, of the inner vessel plus any appropriate liquid head. For piping inside the vacuum jacket, a further 1 bar (or 0,1 MPa) shall be added;

e) The design shall consider the effects of vibration during transportation.

10.2.4 Inspection openings

Inspection openings are not required in the inner vessel or the outer jacket, provided that the requirements of ISO 21009-2 are followed.

NOTE 1 Due to the combination of materials of construction and operating fluids, internal corrosion cannot occur.

NOTE 2 The inner vessel is inside the evacuated outer jacket and hence external corrosion of the inner vessel cannot occur.

NOTE 3 The elimination of inspection openings also assists in maintaining the integrity of the vacuum in the interspace.

10.2.5 Pressure relief

10.2.5.1 General

Relief devices for the inner vessel shall be in accordance with ISO 21013-3;

Relief devices for the outer jacket shall be in accordance with Annex I.

© ISO 2022 – All rights reserved
Documents
Document Sharing Hub
Full document details: ISO 21009-1-2022

10.2.5.2 Inner vessel

The inner vessel shall be provided with a pressure limiting system to protect the vessel against excessive pressure. Examples of current practice are shown in Annex D. The system shall:

— be designed so that it is fit for purpose;

— be independent of other functions, unless its safety function is not affected by such other functions;

— limit the vessel pressure to 110 % maximum allowable pressure in all emergency cases except fire engulfment;

NOTE Where required, to protect the vessel against fire engulfment, a bursting disc can be used which is set at the test pressure of the vessel.

— fail safely;

— contain redundant features; and

— contain non-common-mode failure mechanisms (diversity).

The capacity of the protection system shall be established by considering all of the probable conditions contributing towards internal excess pressure. For example:

a) normal vessel heat leak;

b) heat leak with loss of vacuum;

c) failure in the open position of the pressure build-up regulator;

d) flow capacity of any other valve in a line connecting a high-pressure source to the inner vessel;

e) recycling from any possible combination of pumps;

f) flash gas, plus liquid, from maximum capacity of filling system fed into a tank which is at operating temperature;

g) external fire condition with the loss of vacuum shall be considered if required (normally not required for directly buried underground installations).

The excess pressure created by any combination of conditions a) to f) shall be limited to not more than 110 % of maximum allowable pressure by at least one re-closable device. The required capacity of this re-closable device may be calculated in accordance with ISO 21013-3.

Where, in addition, a non-re-closable, fail safe device is fitted, its operating pressure should be chosen such that its ability to retain pressure is unaffected by the operation of the re-closable device at 110 % of maximum allowable pressure. The required capacity of any device provided for redundancy shall be equal to the required capacity of the primary device at vessel test pressure.

Shut off valves or equivalent may be installed upstream of pressure relief devices, provided that interlocks are fitted to ensure that the vessel has sufficient relief capacity at all times.

The relief valve system piping shall be sized such that the pressure drops during discharge are fully taken into account so that the vessel pressure is not excessive and also so that the valve does not reseat instantly, i.e. chatter.

The maximum pressure drop of the pipework to the pressure relief device should not exceed that specified in ISO 21013-3.

10.2.5.3 Outer jacket

A pressure relief device shall be fitted to the outer jacket. The device shall be set to open at a pressure which prevents collapse of the inner vessel and is not more than 0,5 bar (0,05 MPa).

Documents
Document Sharing Hub

© ISO 2022 – All rights reserved

Full document details: ISO 21009-1-2022

The discharge area of the pressure relief device(s) should not be less than 0,34 mm^2/l capacity of the inner vessel for small vessels up to 15 000 l. However, normally the size of this device need not exceed 5 000 mm^2.

10.2.5.4 Piping

Any section of pipework containing cryogenic fluid which can be isolated shall be protected by a relief valve or other suitable relief device.

10.2.6 Valves

10.2.6.1 General

Valves shall conform to ISO 21011.

10.2.6.2 Isolating valves

To prevent any large spillage of liquid, a secondary means of isolation shall be provided for those lines emanating from below the liquid level that are:

— greater than 13 mm bore and exhausting to atmosphere, or

— greater than 50 mm bore when forming part of a closed system.

The secondary means of isolation may be within the user installation and shall provide an equivalent level of protection.

The secondary means of isolation, where provided, may be achieved, for example, by the installation of a second valve, positioned so that it can be operated safely in emergency, an automatic fail-closed valve or a non-return valve or fixed or removable cap on the open end of the pipe.

10.2.7 Filling ratio

Means shall be provided to ensure that the vessel is not filled to more than 95 % of its gross volume with liquid at the filling condition.

10.2.8 Electrical continuity

For all static vessels designed to store flammable and oxidising fluids, means shall be provided to assure electrical continuity.

10.3 Design by calculation

10.3.1 General

When design is by calculation in accordance with 10.1.2, the dimensions of the inner vessel and outer jacket shall not be less than that determined in accordance with 10.3.

10.3.2 Inner vessel

10.3.2.1 General

The information in 10.3.2.2 through 10.3.2.6 shall be used to determine the pressure part thicknesses in conjunction with the calculation formulae of 10.3.6.

© ISO 2022 – All rights reserved
Documents
Document Sharing Hub
Full document details: ISO 21009-1-2022

10.3.2.2 Design loads and allowable stresses

a) In accordance with 10.2.3.2.1 a), c), e), f) and 10.2.3.2.2, 1), material properties determined either in accordance with 10.3.2.3.2 or 10.3.2.3.3 shall be used if allowed by the competent authorities where the vessel is to be operated.

b) In accordance with 10.2.3.2.1 b), d), g), h), and 10.2.3.2.2, 2), 3), 4), and 5), material properties determined in accordance with 10.3.2.3.2 shall be adopted.

10.3.2.3 Material property, *K*

10.3.2.3.1 General

The materials to be used for pressure-bearing parts shall meet the following requirements.

Where the behaviour of a material can be affected by manufacturing processes or operating conditions, to an extent that would adversely affect the safety or service life of the pressure vessel, this shall be taken into consideration when specifying materials.

Adverse effects can arise from manufacturing processes, e.g. degree of cold forming and heat treatment; operating conditions, e.g. hydrogen embrittlement, corrosion, scaling and ageing behaviour of the material after cold forming.

Materials for pressure bearing parts shall conform to the technical delivery conditions in 9.2.

Materials shall be selected to be compatible with anticipated fabrication steps and to be suitable for the internal fluid and external environment. Both normal operating conditions and transient conditions occurring during fabrication transport, testing and operation shall be taken into account when specifying the materials.

The materials should be grouped in accordance with ISO/TR 15608 to relate manufacturing and inspection requirements to generic material types.

Materials have been allocated into these groups in accordance with their chemical composition and properties in view of manufacture and heat treatment after welding.

The material property used in the calculations shall be in accordance with 10.3.2.3.2.

10.3.2.3.2 Material property K_{20}

The material property, K_{20}, to be used in the calculations shall be as follows:

Material	Property *K*	Requirements
austenitic stainless steel	1 % yield strength or σ_k according to Table C.1 or 1 % yield strength x 1,15 according to Annex J	Annex C and only for material according to Table C.1 Further requirements [a]
all other metals	0,2 % yield strength (or 1,0 % if applicable)	R_e/R_m not exceeding 0,625, excluding fine-grained steel and specially heat-treated steel

[a] In the case of austenitic stainless steels, the specified minimum values may be exceeded by up to 15 % for carrying all loads listed in 10.2.3.2 for the design pressure, *p*, specified under 10.2.3.2.1 a). The 15 % higher values of K_{20} may be used provided this higher value is guaranteed and attested in the inspection certificate and the welding procedures are suitably qualified for these higher properties.

NOTE Upper yield strength can be used.

© ISO 2022 – All rights reserved

Documents
Document Sharing Hub
Full document details: ISO 21009-1-2022

10.3.2.3.3 Material property used for design K_t

The permissible value of K shall be determined for the material at the operating temperature corresponding to the saturation temperature, at the maximum allowable pressure of the vessel, of the contained cryogenic fluid. The value of K and E shall be determined from the material standard (see EN 10028-7:2017, Annex F for austenitic stainless steels) or shall be guaranteed by the material manufacturer.

10.3.2.4 Safety factors, S, S_T, S_p and S_k

Safety factors, the ratio of material property, K, over the maximum allowable stress, are a) or b):

a) internal pressure (pressure on the concave surface):

— at vessel maximum allowable pressure

$S = 1{,}5$

— at vessel test pressure

$S_T = 1{,}05$

b) external pressure (pressure on the convex surface):

— cylinders and cones

$S_p = 1{,}6$

$S_k = 3{,}0$

— spherical region

$S_p = 2{,}4$

$S_k = 3{,}0 + 0{,}002\ R/s$

— knuckle region

$S_p = 1{,}8$

10.3.2.5 Weld joint factors, v

For internal pressure (pressure on the concave surface)

$v = 0{,}85$ or $1{,}0$ (see Table 6)

For external pressure (pressure on the convex surface)

$v = 1{,}0$

10.3.2.6 Allowances for corrosion, c

$c = 0$

NOTE ISO 21009-2 gives requirements for safe operation for such cryogenic vessels.

10.3.3 Outer jacket

10.3.3.1 General

The following shall be used to determine the pressure part thickness in conjunction with the calculation formulae of 10.3.6.

© ISO 2022 – All rights reserved
Documents
Document Sharing Hub
Full document details: ISO 21009-1-2022

10.3.3.2 Design pressure, *p*

The internal design pressure, *p*, shall be equal to the set pressure of the outer jacket pressure relief device.

The external design pressure, *p*, shall be 1 bar (0,1 MPa).

10.3.3.3 Material property, *K*

The material property, *K*, to be used in the calculations shall be at 20 °C, as defined in 10.3.2.3.

10.3.3.4 Safety factors S, S_p and S_k

Internal pressure (pressure on the concave surface)

$S = 1{,}1$

External pressure (pressure on the convex surface)

— cylinders and cones

$S_p = 1{,}1$

$S_k = 2{,}0$

For well proven designs (evidence of satisfactory service under the same operating conditions), a factor of safety, S_k, equal to 1,5 is acceptable provided that

a) D is not more than 2 300 mm,

b) l_b is not more than 10 200 mm, and

c) the annular space is perlite insulated.

— spherical region

$S_p = 1{,}6$

$S_k = 2{,}0 + 0{,}001\,4\,R/s$

— knuckle region

$S_p = 1{,}2$

10.3.3.5 Weld joint factors, *v*

For internal pressure (pressure on the concave surface)

$v = 0{,}7$

For external pressure (pressure on the convex surface)

$v = 1{,}0$

10.3.3.6 Allowances for corrosion, *c*

No allowance is required.

$c = 0$

External surfaces should be adequately protected against corrosion.

© ISO 2022 – All rights reserved

Documents
Document Sharing Hub
Full document details: ISO 21009-1-2022

10.3.4 Supports and lifting points

10.3.4.1 Supports for operating condition

The supports and lifting points shall be designed for the loads defined in 10.2, using established structural design methods and safety factors specified in 10.3.2.4 and 10.3.2.5. Due to the dynamic nature of lifting loads, they shall be multiplied by 1,5 for the purpose of designing lifting points.

When designing the inner vessel, the temperature and corresponding mechanical properties of the structural attachment that is attached to the inner vessel may be those of the component in question when the inner vessel is filled to capacity with cryogenic fluid at a temperature not lower than the saturation temperature at pressure, p_s. However, it shall be checked whether the stresses are acceptable in warm conditions (i.e. vessel empty).

10.3.4.2 Lifting points and supports for installation and transport condition

The lifting points and supports shall be designed for the loads based on transport, installation loads which are dynamic nature by multiplying by factor 1,5 under consideration of 10.2.3.4 and 10.2.3.6 using established structural design methods and safety factors specified in 10.3.2.4 and 10.3.2.5.

10.3.5 Piping and accessories

Piping shall be designed for the loads defined in 10.2.3.7 using established piping design methods and safety factors specified in 10.3.2.4.

Welding seams of piping inside the vacuum space shall be full penetration welds.

The ability to carry out necessary non-destructive testing based on acceptance levels in Table 8 ("Acceptance levels for fatigue loaded vessels") shall be considered.

Piping system shall have sufficient inherent flexibility to prevent the following during their design lifetime:

a) Failure of piping or supports from overstress under consideration of paragraph 10.2.3.1;

b) Leakage at any point in the piping;

c) Detrimental stresses or distortion in the piping or in-line equipment (e.g. valves) or in connected equipment resulting from excessive thrusts and moments in the piping.

10.3.6 Calculation formulae

10.3.6.1 Cylinders and spheres subject to internal pressure (pressure on the concave surface)

10.3.6.1.1 Field of application

Cylinders and spheres where:

$$D_a / D_i \leq 1{,}2$$

10.3.6.1.2 Openings

For reinforcement of openings see 10.3.6.7.

10.3.6.1.3 Calculation

The required minimum wall thickness, s, is

© ISO 2022 – All rights reserved
Documents
Document Sharing Hub
Full document details: ISO 21009-1-2022

for cylinders

$$s = \frac{D_a p}{20(K/S)\ v + p} + c$$

for spheres

$$s = \frac{D_a p}{40(K/S)\ v + p} + c$$

In case of p in MPa, conversion shall be considered.

10.3.6.2 Cylinders subject to external pressure (pressure on the convex surface)

10.3.6.2.1 Field of application

Cylinders where

$D_a / D_i \leq 1{,}2$

10.3.6.2.2 Openings

Openings shall be calculated in accordance with 10.3.6.7, using for the pressure in the formula a value equal to the external pressure as though it were internally applied.

10.3.6.2.3 Calculation

Annex L gives two alternative calculation methods. Both methods give comparable results and shall be equally accepted.

10.3.6.3 Spheres subject to external pressure (pressure on the convex surface)

10.3.6.3.1 Openings

Openings shall be calculated in accordance with 10.3.6.7, using for the pressure in the formula a value equal to the external pressure as though it were internally applied.

10.3.6.3.2 Calculation

Spheres subject to external pressure shall be evaluated in accordance with Annex L, in particular subclauses L.1.2 and L.2.2.

10.3.6.4 Dished ends

10.3.6.4.1 Field of application

The following dished ends may be utilized:

a) hemispherical ends where $D_a / D_i \leq 1{,}2$;

b) 10 % torispherical ends where $R = D_a$ and $r = 0{,}1 D_a$

c) 2:1 torispherical ends where $R = 0{,}8\ D_a$ and $r = 0{,}154\ D_a$.

In the case of torispherical ends $0{,}001 \leq (s - c)/D_a \leq 0{,}1$).

NOTE Other end shapes can be used provided suitable calculations are carried out.

© ISO 2022 – All rights reserved

Documents
Document Sharing Hub
Full document details: ISO 21009-1-2022

Dished ends of vacuum jackets are not required to meet the above restrictions on R and r, when r is greater or equal to $3s$.

10.3.6.4.2 Straight flange

The straight flange length, h_1 [Figure 4a)], shall be not less than 3 mm for all ends.

The straight flange may be shorter providing that in the case of inner vessels the circumferential joint between the dished end and the cylinder is non-destructively tested as required for a weld joint factor of 1,0.

NOTE Other flange/weld configurations can be used provided that suitable calculations are carried out.

10.3.6.4.3 Intermediate heads

Heads, without limit to thickness, may be installed in accordance with Figure F.2. The outside diameter of the head skirt shall be a close fit inside the ends of the adjacent sections of the cylinder.

The butt weld and fillet weld shall be adequately sized to jointly resist any relevant pressure, mechanical and thermal loads. This may be achieved by accurate detailed stress analysis and by adopting the criteria for acceptable stresses of Annex A.

Where only pressure stresses are present, a simplified approach may be adopted such that the butt weld and fillet weld are sized to resist in shear a load equivalent to 1,5 times the maximum differential pressure across the head multiplied by the cross-sectional area of the shell.

The allowable shear stress in this simplified case should not exceed $K/3$ where the area of the butt weld in shear is the width at the root of the weld multiplied by the circumferential length of the weld and the area of the fillet weld is the throat thickness multiplied by the circumferential length of the weld.

Where the stresses in the attachment are fully analysed and assessed in accordance with Annex A, the fillet weld may be omitted. In other cases, the fillet weld shall be continuous.

10.3.6.4.4 Internal pressure calculation (pressure on concave surface)

10.3.6.4.4.1 Crown and hemisphere thickness

The crown region of a torispherical head shall be defined as 0,6 D_a (see Figure 4).

The wall thickness of the crown region of dished ends and of hemispherical ends shall be determined using 10.3.6.1.3 for spheres with $D_a = 2\ (R + s)$.

Openings within the crown area of torispherical ends [see Figure 4b)], and in hemispherical ends shall be reinforced in accordance with 10.3.6.7. When pad type reinforcement is used the edge of the pad shall not extend beyond the area of 0,8 D_a for 10 % torispherical ends or 0,7 D_a for 2:1 torispherical ends.

10.3.6.4.4.2 Knuckle thickness

The iteration method of Annex N shall be used for determining the wall thickness of the knuckle region of dished ends and of hemispherical ends, considering Figure 5 and 6.

If there are openings in the area outside 0,6 D_a, these are taken into account by increasing the design factor in the ratio $di/D_a > 0$ according to Figures 5 and 6.

10.3.6.4.4.3 If the ligament on the connecting line between adjacent openings is not entirely within the 0,6 D_a region the ligament shall not be less than half the sum of the opening diameters.

© ISO 2022 – All rights reserved
Documents
Document Sharing Hub
Full document details: ISO 21009-1-2022

10.3.6.4.5 External pressure calculations (pressure on the convex surface)

10.3.6.4.5.1 Openings

Openings shall be calculated in accordance with 10.3.6.7, using for the pressure in the formula a value equal to the external pressure as though it were internally applied.

10.3.6.4.5.2 Calculation

See Annex L.

10.3.6.5 Cones subject to internal or external pressure

10.3.6.5.1 Field of application

Cones according to Figure 7 where:

$$0{,}001 \leq \frac{s_g - c}{D_{a1}} \leq 0{,}1$$

and

$$0{,}001 \leq \frac{s_l - c}{D_{a1}} \leq 0{,}1$$

Small ends with a knuckle can be safely assessed and verified as a small end with a corner joint.

For external pressure $|\varphi| \leq 70°$.

Other cone angles may be used provided that suitable calculations are carried out.

10.3.6.5.2 Openings

Openings outside of the corner area (Figure 8) shall be designed as follows.

If $|\varphi| \leq 70°$ design according to 10.3.6.5.5 using an equivalent cylinder diameter of:

$$D_i = \frac{D_s + d_1 |\sin \varphi|}{\cos \varphi}$$

$|\varphi| > 70°$ design according to 10.3.6.5.6.

10.3.6.5.3 Non-destructive testing

All corner joints shall be subject to the examination required for a weld joint factor of 1,0. See Table 6.

10.3.6.5.4 Corner area

The corner area is that part of the cone where the dominant stresses are bending stresses in the longitudinal direction.

The corner area is defined in Figures 7 a) and b) by x_1, x_2, x_3 calculated from the following formulae:

$$x_1 = \sqrt{D_{a1}(s_l - c)}$$

$$x_2 = 0{,}7\sqrt{\frac{D_{a1}(s_l - c)}{\cos \varphi}}$$

© ISO 2022 – All rights reserved

Documents
Document Sharing Hub
Full document details: ISO 21009-1-2022

$x_3 = 0{,}5x_1$

10.3.6.5.5 Internal pressure calculation (pressure on concave surface) $|\varphi| \leq 70°$

a) within corner area

The required wall thickness (s_1) within the corner area is calculated from Figures 10 a) to 10 g) for the large end and Figure 10 h) for the small end of a cone using the following variables:

$$\varphi,\ \frac{pS}{15Kv},\ \text{and}\ \frac{r}{D_{a1}}$$

For a corner joint use the curve for $\frac{r}{D_{a1}} = 0$.

For intermediate cone angles use linear interpolation. The wall thickness, s_l, in the corner area shall not be less than the required thickness, s_g, outside of the corner area as calculated in 10.3.6.5.5 b).

b) outside corner area

The required wall thickness, s_g, outside the corner area is calculated from:

$$s_g = \frac{D_k p}{20\frac{K}{S}v - p} \div \frac{1}{\cos\ \varphi} + c$$

where for the large end, $D_k = D_{a1} - 2[s_1 + r(1 - \cos\varphi) + x_2 \sin\ \varphi]$.

For the small end, D_k is the maximum diameter of the cone, where the wall thickness is s_g.

In case of p in MPa, conversion shall be considered.

10.3.6.5.6 Internal pressure calculation (pressure on the concave surface) $\varphi > 70°$

If $r \geq 0{,}01\ D_{a1}$ the required wall thickness is

$$s_l = s_g = 0{,}3(D_{a1} - r) \times \frac{|\varphi|}{90} \times \sqrt{\frac{p}{10\left(\frac{k}{S}\right)v}} + c$$

In case of p in MPa, conversion shall be considered.

10.3.6.5.7 External pressure calculation (pressure on the convex surface)

Stability against elastic buckling and plastic deformation shall be verified using 10.3.6.2 and an equivalent cylinder.

For the example shown in Figure 9 the equivalent cylinder diameter between the knuckle and the stiffener is:

$$D_a = \frac{D_{a1} + D_{a2}}{2\cos|\varphi|}$$

and the equivalent cylinder length is:

$$l = \frac{D_{a1} - D_{a2}}{2\sin|\varphi|}$$

Depending on the relevant boundary conditions the equivalent length between two effective stiffening sections shall be reliably estimated within the context of 10.3.6.2.

© ISO 2022 – All rights reserved
Documents
Document Sharing Hub
Full document details: ISO 21009-1-2022

When $\varphi \geq 10°$ the corner area of a large end can be considered as effective stiffening.

For small ends the thickness in the corner area shall not be less than 2,5 times the required thickness of the conical shell with the same angle $|\varphi|$ or a stiffener shall be fitted with the following properties:

$$I \geq \frac{p(D_{a1})^4}{960\left(\frac{E}{S_k}\right)} \tan|\varphi|$$

If a test pressure higher than 1,25 p is specified, an additional assessment shall be made to ensure that the adopted value of I is not less than that determined at the test pressure with a safety factor of 0,74 S_k.

$$A \geq \frac{p(D_{a1})^2}{80\left(\frac{K}{S_p}\right)} \tan|\varphi|$$

If a test pressure higher than 1,25 p is specified, an additional assessment shall be made to ensure that the adopted value of A is not less than that determined at the test pressure with a safety factor of 0,74 S_p.

S_k (cylinder) is the safety factor to prevent elastic buckling from 10.3.2.4 or 10.3.3.4;

S_p (cylinder) is the safety factor to prevent plastic deformation from 10.3.2.4 or 10.3.3.4;

D_{a1} is the diameter according to Figure 7 b).

The shell over a width of $0{,}5\sqrt{D_{a1}s_1}$ can be used to calculate the moment of inertia and the area.

In addition, the corner joint should not be regarded as a classical boundary condition i.e. the overall length should be formed from the individual meridional length of the cone and cylinder.

In addition, the cone shall be verified using 10.3.6.5.5 and the safety factors S_p for cylinders from 10.3.2.4. or 10.3.3.4. If a test pressure higher than 1,25 p is specified, an additional assessment shall be made to ensure that the adopted material thickness is not less than that determined at the test pressure with a safety factor of 0,74 S_k. For thickness calculations in the corner area, v shall be the value applicable for internal pressure.

In case of p in MPa, conversion shall be considered.

10.3.6.6 Flat ends

10.3.6.6.1 Field of application

Welded or solid flat ends where Poisson ratio is approximately 0,3 and

$$\frac{(s-c)}{D} \geq \sqrt[4]{\frac{0{,}0087p}{E}}$$

and

$$\frac{(s-c)}{D} \leq \frac{1}{3}$$

10.3.6.6.2 Openings

Openings are calculated in accordance with 10.3.6.6.3 but with the C factor multiplied by C_A, where C_A is given in Figure 11.

© ISO 2022 – All rights reserved

Documents
Document Sharing Hub
Full document details: ISO 21009-1-2022

10.3.6.6.3 Calculation

The required minimum wall thickness of a circular flat end is:

$$s = CD_1 \sqrt{\frac{0,1pS}{K}} + c$$

C and D_1 are taken from Figure 12.

The required minimum wall thickness of a rectangular or torispherical flat end is

$$s = CC_E f \sqrt{\frac{0,1pS}{K}} + c$$

where C_E is taken from Figure 13.

In case of p in MPa, conversion shall be considered.

10.3.6.7 Openings in cylinders, spheres and cones

10.3.6.7.1 Reinforcement methods

Openings may be reinforced by one or more of the following typical but not exclusive methods:

— increase of shell thickness, see Figures 14 and 15;

— set-in or set-on ring reinforcement, see Figures 16 and 17;

— pad reinforcement, see Figure 18;

— increase of nozzle thickness, see Figures 19 and 20;

— pad and nozzle reinforcement, see Figure 21.

Where ring or pad reinforcement is used on the inner vessel, the space between the two fillet welds shall be vented into the vacuum inter-space.

10.3.6.7.2 Design of openings

All nozzles shall be attached to the vessel wall with a full penetration weld unless the attachment weld is maintained at atmospheric temperatures at all times or the weld is not subjected to thermal cycling.

The fillet weld on a reinforcing pad shall have a minimum throat thickness of half of the pad thickness.

The throat thickness of a fillet weld of each nozzle to shell weld shall be not less than the required thickness of the thinner part.

Where the strength of the reinforcing material is lower than the strength of the shell material an allowance in accordance with 10.3.6.7.3 shall be made in the design calculations. If the strength of the reinforcing material is higher than the strength of the shell material, no allowance for the increased strength is permitted.

The design rules for non-perpendicular nozzles shall be based on a perpendicular nozzle, using the dimension of the major torispherical axis.

10.3.6.7.3 Calculation

One of the alternative calculation methods presented in Annex M shall be used. Both methods give comparable results and shall be equally accepted.

© ISO 2022 – All rights reserved
Documents
Document Sharing Hub
Full document details: ISO 21009-1-2022

10.3.7 Calculations for operating loads

Unless the design has been validated by experiment, calculations in addition to those in 10.3.6 may be required to ensure that stresses due to operating loads are within acceptable limits. All load conditions expected during service shall be considered (see 10.2.3).

In these calculations, static loads are substituted for static plus dynamic loads.

The analysis shall take account of gross structural discontinuities but need not consider local stress concentrations.

Annex A or ASME, section VIII, Division 2 provides terminology and acceptable stress limits when an elastic stress analysis is performed.

Acceptable calculation methods include:

— finite element;

— finite difference;

— boundary element;

— recognised text books, codes and standards.

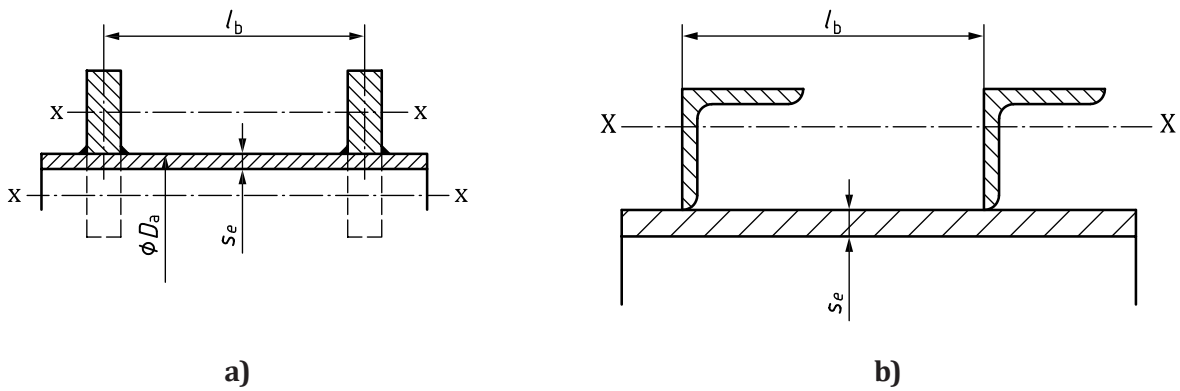

Figure 1 — Stiffening rings

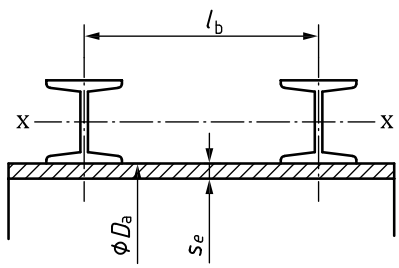

Figure 2 — Sectional materials stiffeners

© ISO 2022 – All rights reserved

Documents
Document Sharing Hub
Full document details: ISO 21009-1-2022

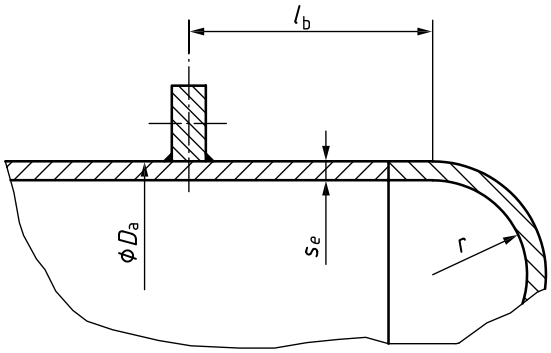

Figure 3 — Dished ends

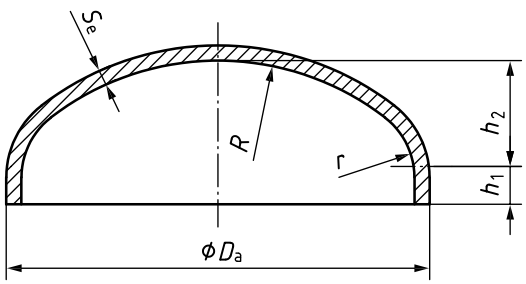

a) Unpierced dished end

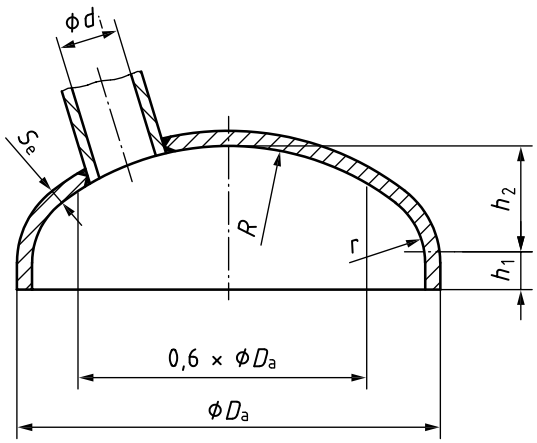

b) Dished end with nozzle

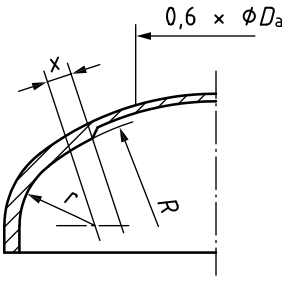

c) End with knuckle and crown of unequal wall thickness

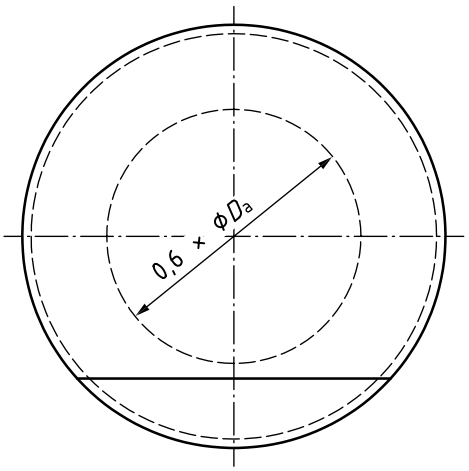

d) Weld outside 0,6, D_a

© ISO 2022 – All rights reserved

Documents
Document Sharing Hub
Full document details: ISO 21009-1-2022

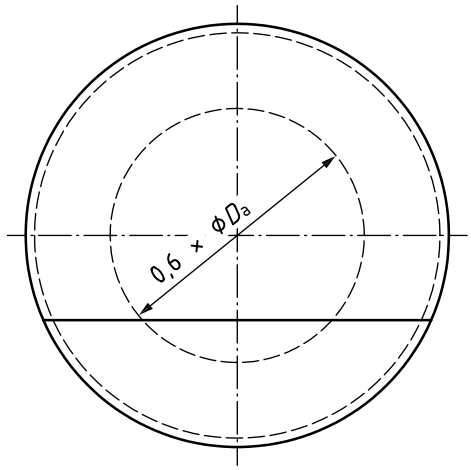

e) Weld inside 0,6, D_a

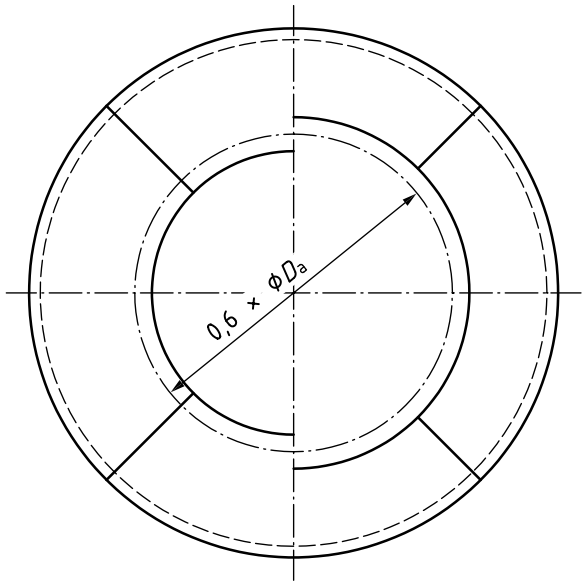

f) End welded together from round plate and segments

Figure 4 — Vessel ends and weld positions

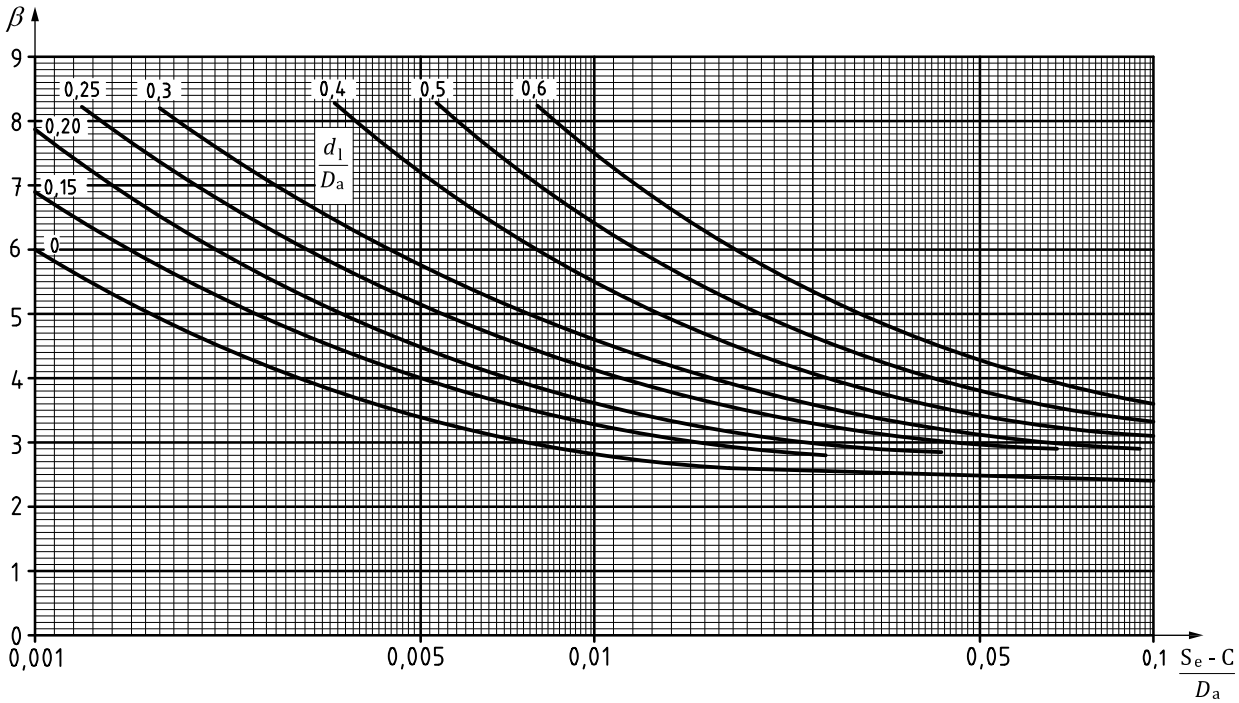

Figure 5 — Design factors, β, for 10 % torispherical dished ends

© ISO 2022 – All rights reserved

Documents
Document Sharing Hub
Full document details: ISO 21009-1-2022

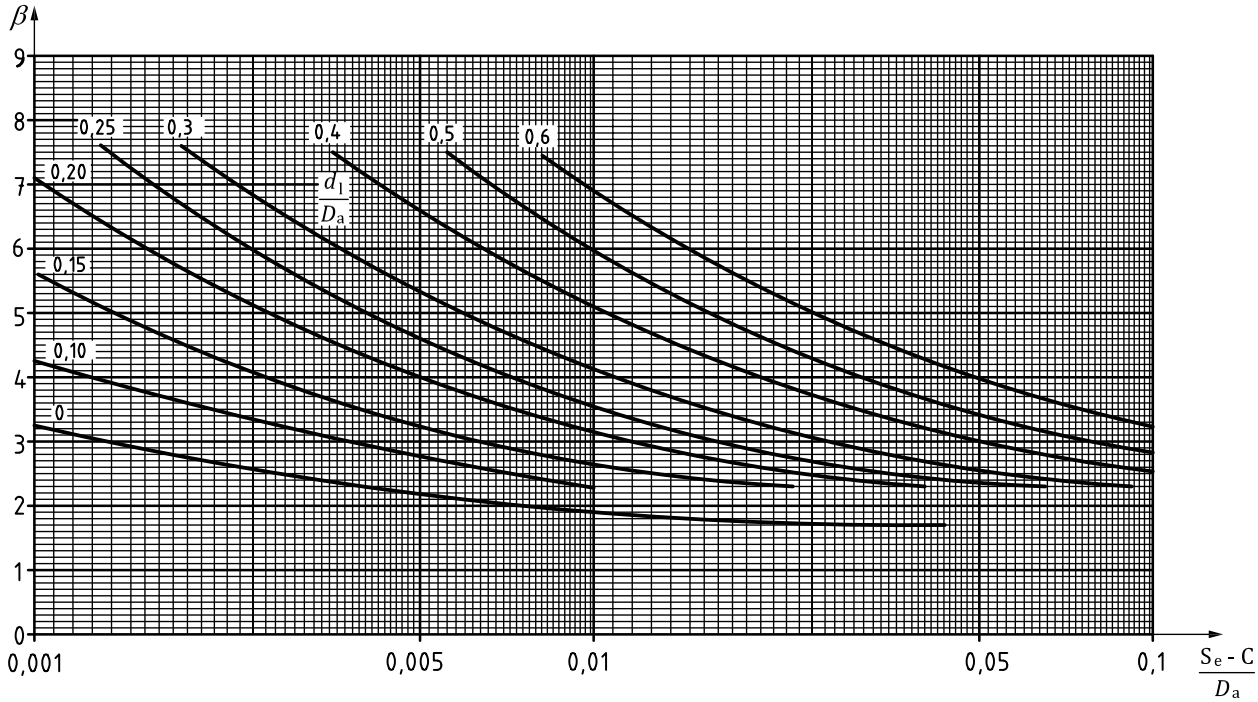

Figure 6 — Design factors, β, for 2:1 torispherical dished ends

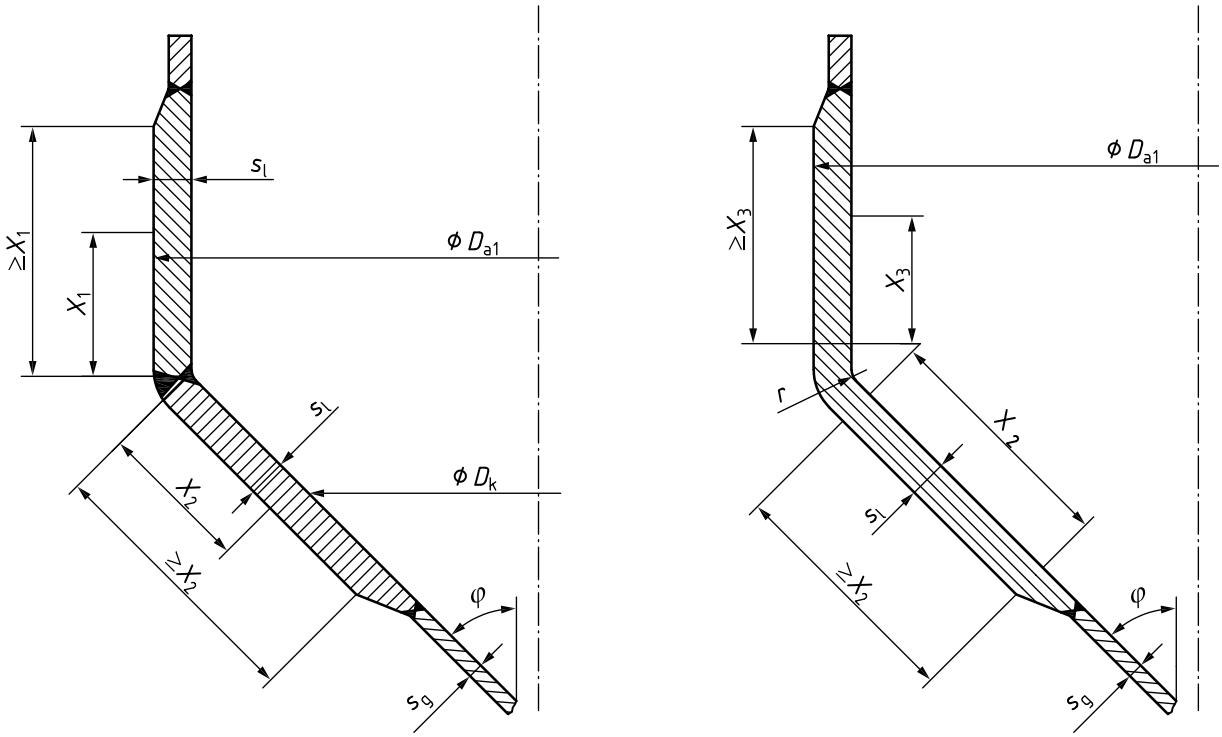

a) Geometry of convergent conical shells

© ISO 2022 – All rights reserved

Documents
Document Sharing Hub
Full document details: ISO 21009-1-2022

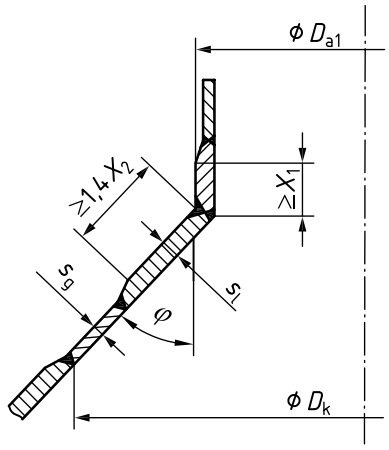

b) Geometry of a divergent conical shell

Figure 7 — Geometry of conical shell

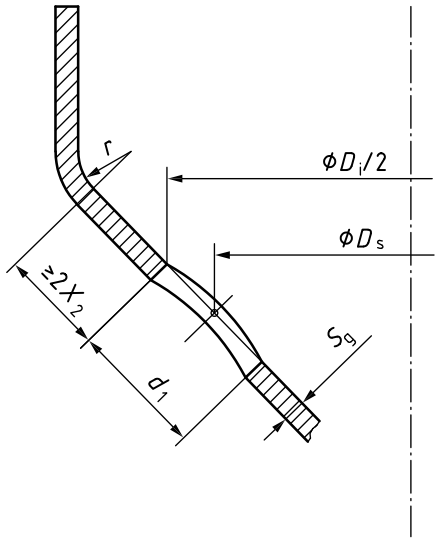

Figure 8 — Geometry of a cone opening

© ISO 2022 – All rights reserved

Documents
Document Sharing Hub
Full document details: ISO 21009-1-2022

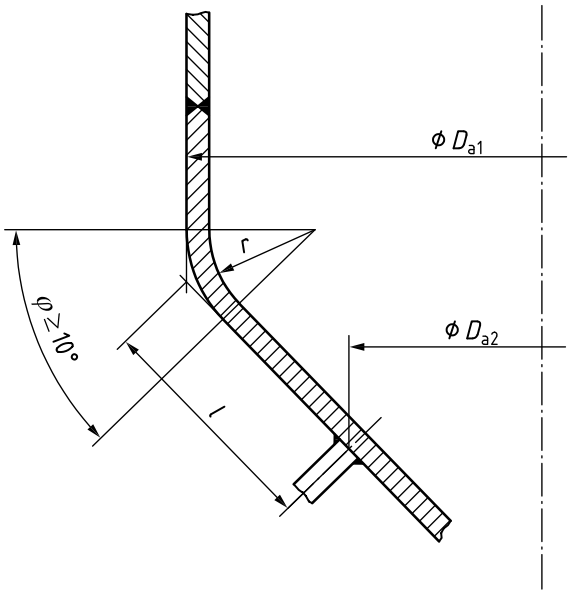

Figure 9 — Geometrical quantities in the case of loading by external pressure

© ISO 2022 – All rights reserved
Documents
Document Sharing Hub
Full document details: ISO 21009-1-2022

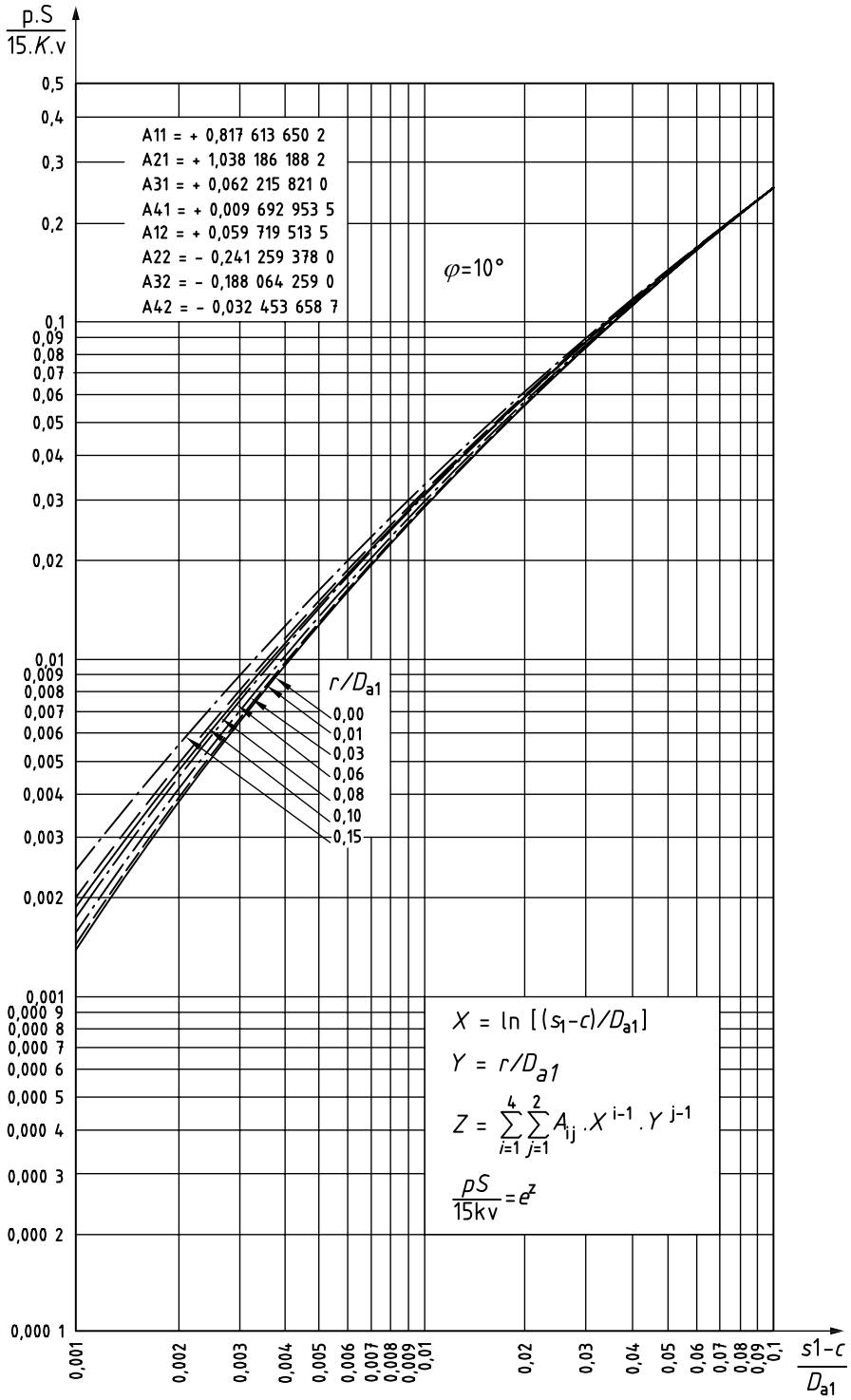

a) Permissible value, $\frac{pS}{15Kv}$, for convergent cone with an opening angle φ = 10°

© ISO 2022 – All rights reserved

Documents
Document Sharing Hub
Full document details: ISO 21009-1-2022

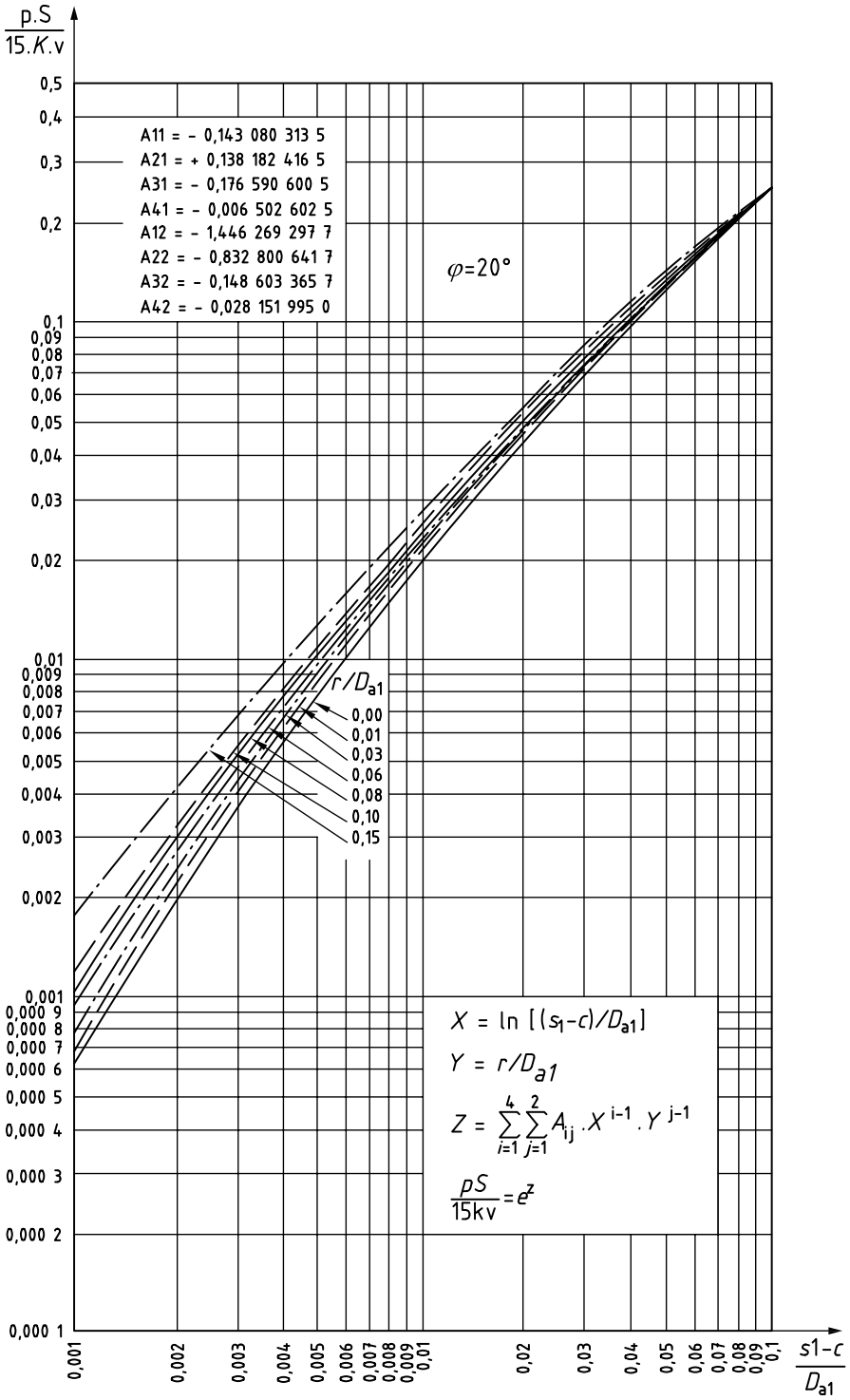

b) Permissible value, $\frac{pS}{15Kv}$, for convergent cone with an opening angle φ = 20°

© ISO 2022 – All rights reserved

Documents
Document Sharing Hub
Full document details: ISO 21009-1-2022