INTERNATIONAL STANDARD

ISO 21806-5

First edition
2020-09

Road vehicles — Media Oriented Systems Transport (MOST) —

Part 5: Transport layer and network layer conformance test plan

Véhicules routiers — Système de transport axé sur les médias —

Partie 5: Plan d'essais de conformité de la couche transport et de la couche réseau

Reference number
ISO 21806-5:2020(E)

Documents
Document Sharing Hub
© ISO 2020

Full document details: ISO 21806-5-2020

COPYRIGHT PROTECTED DOCUMENT

© ISO 2020

All rights reserved. Unless otherwise specified, or required in the context of its implementation, no part of this publication may be reproduced or utilized otherwise in any form or by any means, electronic or mechanical, including photocopying, or posting on the internet or an intranet, without prior written permission. Permission can be requested from either ISO at the address below or ISO's member body in the country of the requester.

ISO copyright office
CP 401 • Ch. de Blandonnet 8
CH-1214 Vernier, Geneva
Phone: +41 22 749 01 11
Email: copyright@iso.org
Website: www.iso.org

Published in Switzerland

© ISO 2020 – All rights reserved

Documents
Document Sharing Hub

Full document details: ISO 21806-5-2020

Contents

Page

Foreword ... **iv**
Introduction ... **v**
1 Scope ... **1**
2 Normative references ... **1**
3 Terms and definitions ... **1**
4 Symbols and abbreviated terms ... **2**
4.1 Symbols ... 2
4.2 Abbreviated terms ... 2
5 Conventions ... **2**
6 CTP overview ... **2**
6.1 Test set-up ... 2
6.2 CTP organisation ... 4
7 CTP general information ... **4**
7.1 CTC remarks ... 4
7.1.1 Timer naming ... 4
7.1.2 Deadlock prevention ... 4
7.1.3 Un-initialised logical node address ... 5
7.1.4 Addresses of MOST nodes in the LT ... 5
7.1.5 Device manufacturer information list ... 5
7.1.6 States of the node that contains the IUT ... 6
7.1.7 Procedures ... 7
7.1.8 Violation of prerequisites of the CTC ... 8
7.2 CTC items ... 8
7.2.1 FBlock EnhancedTestability (ET) ... 8
7.2.2 Multi-node devices ... 8
7.2.3 Node kinds excluded from conformance testing ... 8
8 CTC specification ... **9**
8.1 Wake-up ... 9
8.1.1 TimingMaster wake-up ... 9
8.1.2 CTC_2.1.3-1 – TimingSlave wake-up test ... 12
8.2 s_NetInterface_Normal_Operation – Unlock ... 15
8.2.1 CTC_2.2.1-3 – Short unlock test ... 15
8.2.2 CTC_2.2.1-6 – Sudden signal off test ... 17
8.2.3 CTC_2.2.1-7 – Shutdown flag present test ... 19
8.3 Segmented transfer ... 21
8.3.1 CTC_2.8.4-1 – Segmented transfer rejection test ... 21
8.3.2 CTC_2.8.4-2 – Segmented transfer sending test ... 22
8.3.3 CTC_2.8.4-3 – Segmentation error test ... 23
8.3.4 CTC_2.8.4-7 – Segmented transfer buffer test ... 26
8.3.5 CTC_2.8.4-8 – Parallel segmented transfer reception test ... 28
Annex A (normative) **Measurement uncertainty for individual CTCs** ... **30**
Bibliography ... **31**

© ISO 2020 – All rights reserved

Documents
Document Sharing Hub
Full document details: ISO 21806-5-2020

Foreword

ISO (the International Organization for Standardization) is a worldwide federation of national standards bodies (ISO member bodies). The work of preparing International Standards is normally carried out through ISO technical committees. Each member body interested in a subject for which a technical committee has been established has the right to be represented on that committee. International organizations, governmental and non-governmental, in liaison with ISO, also take part in the work. ISO collaborates closely with the International Electrotechnical Commission (IEC) on all matters of electrotechnical standardization.

The procedures used to develop this document and those intended for its further maintenance are described in the ISO/IEC Directives, Part 1. In particular, the different approval criteria needed for the different types of ISO documents should be noted. This document was drafted in accordance with the editorial rules of the ISO/IEC Directives, Part 2 (see www.iso.org/directives).

Attention is drawn to the possibility that some of the elements of this document may be the subject of patent rights. ISO shall not be held responsible for identifying any or all such patent rights. Details of any patent rights identified during the development of the document will be in the Introduction and/or on the ISO list of patent declarations received (see www.iso.org/patents).

Any trade name used in this document is information given for the convenience of users and does not constitute an endorsement.

For an explanation of the voluntary nature of standards, the meaning of ISO specific terms and expressions related to conformity assessment, as well as information about ISO's adherence to the World Trade Organization (WTO) principles in the Technical Barriers to Trade (TBT), see www.iso.org/iso/foreword.html.

This document was prepared by Technical Committee ISO/TC 22, *Road vehicles*, Subcommittee SC 31, *Data communication*.

A list of all parts in the ISO 21806 series can be found on the ISO website.

Any feedback or questions on this document should be directed to the user's national standards body. A complete listing of these bodies can be found at www.iso.org/members.html.

© ISO 2020 – All rights reserved
Documents
Document Sharing Hub
Full document details: ISO 21806-5-2020

Introduction

The Media Oriented Systems Transport (MOST) communication technology was initially developed at the end of the 1990s in order to support complex audio applications in cars. The MOST Cooperation was founded in 1998 with the goal to develop and enable the technology for the automotive industry. Today, MOST[1)] enables the transport of high quality of service (QoS) audio and video together with packet data and real-time control to support modern automotive multimedia and similar applications. MOST is a function-oriented communication technology to network a variety of multimedia devices comprising one or more MOST nodes.

Figure 1 shows a MOST network example.

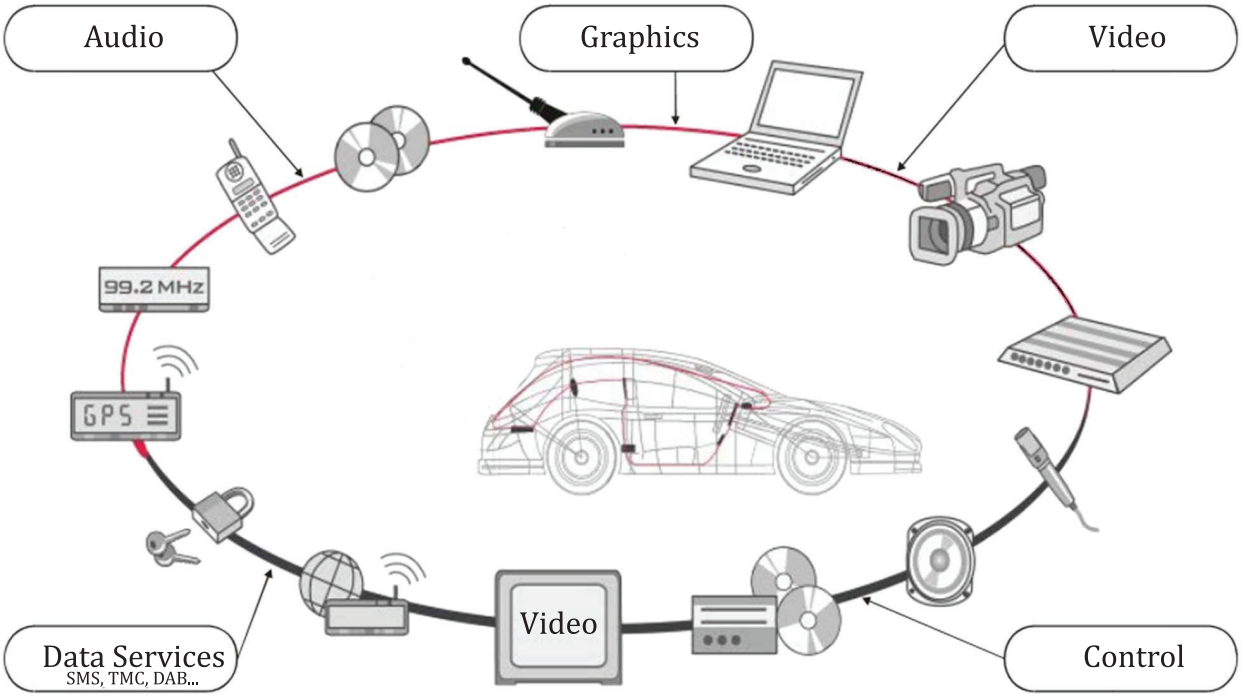

Figure 1 — MOST network example

The MOST communication technology provides:

— synchronous and isochronous streaming,

— small overhead for administrative communication control,

— a functional and hierarchical system model,

— API standardization through a function block (FBlock) framework,

— free partitioning of functionality to real devices,

— service discovery and notification, and

— flexibly scalable automotive-ready Ethernet communication according to ISO/IEC/IEEE 8802-3[2].

MOST is a synchronous time-division-multiplexing (TDM) network that transports different data types on separate channels at low latency. MOST supports different bit rates and physical layers. The network clock is provided with a continuous data signal.

1) MOST® is the registered trademark of Microchip Technology Inc. This information is given for the convenience of users of this document and does not constitute an endorsement by ISO.

© ISO 2020 – All rights reserved

Documents
Document Sharing Hub
Full document details: ISO 21806-5-2020

Within the synchronous base data signal, the content of multiple streaming connections and control data is transported. For streaming data connections, bandwidth is reserved to avoid interruptions, collisions, or delays in the transport of the data stream.

MOST specifies mechanisms for sending anisochronous, packet-based data in addition to control data and streaming data. The transmission of packet-based data is separated from the transmission of control data and streaming data. None of them interfere with each other.

A MOST network consists of devices that are connected to one common control channel and packet channel.

In summary, MOST is a network that has mechanisms to transport the various signals and data streams that occur in multimedia and infotainment systems.

The ISO standards maintenance portal (https://standards.iso.org/iso/) provides references to MOST specifications implemented in today's road vehicles because easy access via hyperlinks to these specifications is necessary. It references documents that are normative or informative for the MOST versions 4V0, 3V1, 3V0, and 2V5.

The ISO 21806 series has been established in order to specify requirements and recommendations for implementing the MOST communication technology into multimedia devices and to provide conformance test plans for implementing related test tools and test procedures.

To achieve this, the ISO 21806 series is based on the open systems interconnection (OSI) basic reference model in accordance with ISO/IEC 7498-1[1] and ISO/IEC 10731[3], which structures communication systems into seven layers as shown in Figure 2. Stream transmission applications use a direct stream data interface (transparent) to the data link layer.

© ISO 2020 – All rights reserved
Documents
Document Sharing Hub
Full document details: ISO 21806-5-2020

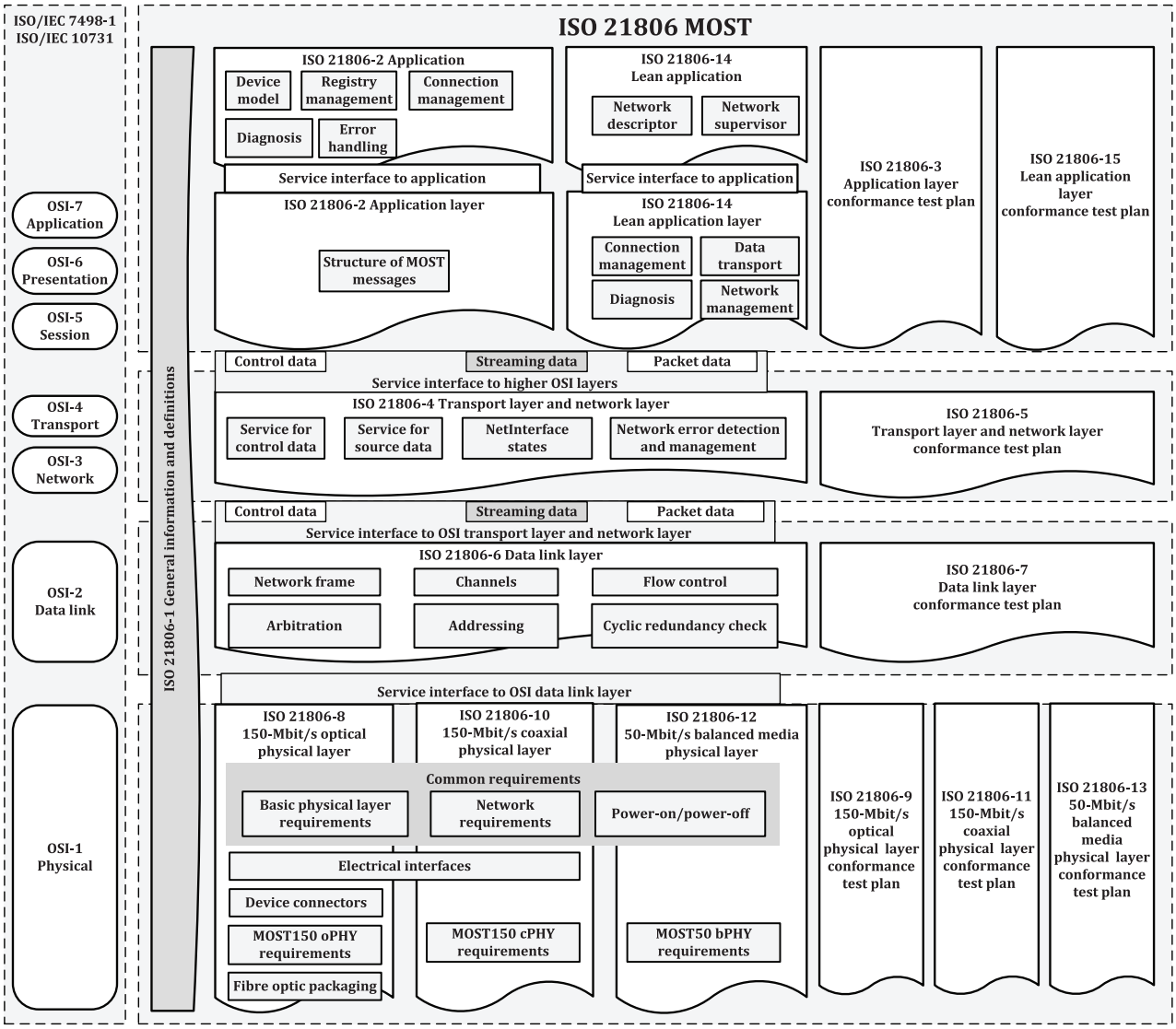

Figure 2 — The ISO 21806 series reference according to the OSI model

The International Organization for Standardization (ISO) draws attention to the fact that it is claimed that compliance with this document may involve the use of a patent.

ISO takes no position concerning the evidence, validity and scope of this patent right.

The holder of this patent right has assured ISO that he/she is willing to negotiate licences under reasonable and non-discriminatory terms and conditions with applicants throughout the world. In this respect, the statement of the holder of this patent right is registered with ISO. Information may be obtained from the patent database available at www.iso.org/patents.

Attention is drawn to the possibility that some of the elements of this document may be the subject of patent rights other than those in the patent database. ISO shall not be held responsible for identifying any or all such patent rights.

© ISO 2020 – All rights reserved

Documents
Document Sharing Hub
Full document details: ISO 21806-5-2020

Documents
Document Sharing Hub

Full document details: ISO 21806-5-2020

Road vehicles — Media Oriented Systems Transport (MOST) —

Part 5: Transport layer and network layer conformance test plan

1 Scope

This document specifies the conformance test plan (CTP) for the transport layer and network layer for MOST, a synchronous time-division-multiplexing network, as specified in ISO 21806-4.

This document specifies conformance test cases (CTCs) in the following categories:

— network layer services;

— data transport mechanism;

— dynamic behaviour of a node.

Interoperability testing is not in the scope of this document.

2 Normative references

The following documents are referred to in the text in such a way that some or all of their content constitutes requirements of this document. For dated references, only the edition cited applies. For undated references, the latest edition of the referenced document (including any amendments) applies.

ISO/IEC 9646-1:1994, *Information technology — Open Systems Interconnection — Conformance testing methodology and framework — Part 1: General concepts*

ISO 21806-1, *Road vehicles — Media Oriented Systems Transport (MOST) — Part 1: General information and definitions*

ISO 21806-2, *Road vehicles — Media Oriented Systems Transport (MOST) — Part 2: Application layer*

ISO 21806-4, *Road vehicles — Media Oriented Systems Transport (MOST) — Part 4: Transport layer and network layer*

3 Terms and definitions

For the purposes of this document, the terms and definitions given in ISO 21806-1, ISO 21806-2, ISO 21806-4, ISO/IEC 9646-1, and the following apply.

ISO and IEC maintain terminological databases for use in standardization at the following addresses:

— ISO Online browsing platform: available at https://www.iso.org/obp

— IEC Electropedia: available at http://www.electropedia.org/

3.1
REPEAT
pseudo code command for an iteration

© ISO 2020 – All rights reserved

Documents
Document Sharing Hub
Full document details: ISO 21806-5-2020

3.2
REPEAT END
pseudo code command for ending an iteration

4 Symbols and abbreviated terms

4.1 Symbols

--- empty cell/undefined

4.2 Abbreviated terms

CTC	conformance test case
CTP	conformance test plan
ET	EnhancedTestability
FBlock	function block
IUT	implementation under test
LT	lower tester
MPI	maximum position information
NCE	network change event
OSI	Open Systems Interconnection
UT	upper tester

5 Conventions

This document is based on OSI service conventions as specified in ISO/IEC 10731[3] and ISO/IEC 9646-1 for conformance test system setup.

6 CTP overview

6.1 Test set-up

All CTCs are based on the same test set-up with an upper tester (UT) and a lower tester (LT). The LT contains the lower tester pre-IUT (LT pre-IUT) and the lower tester post-IUT (LT post-IUT).

Figure 3 specifies the test set-up.

© ISO 2020 – All rights reserved
Documents
Document Sharing Hub
Full document details: ISO 21806-5-2020

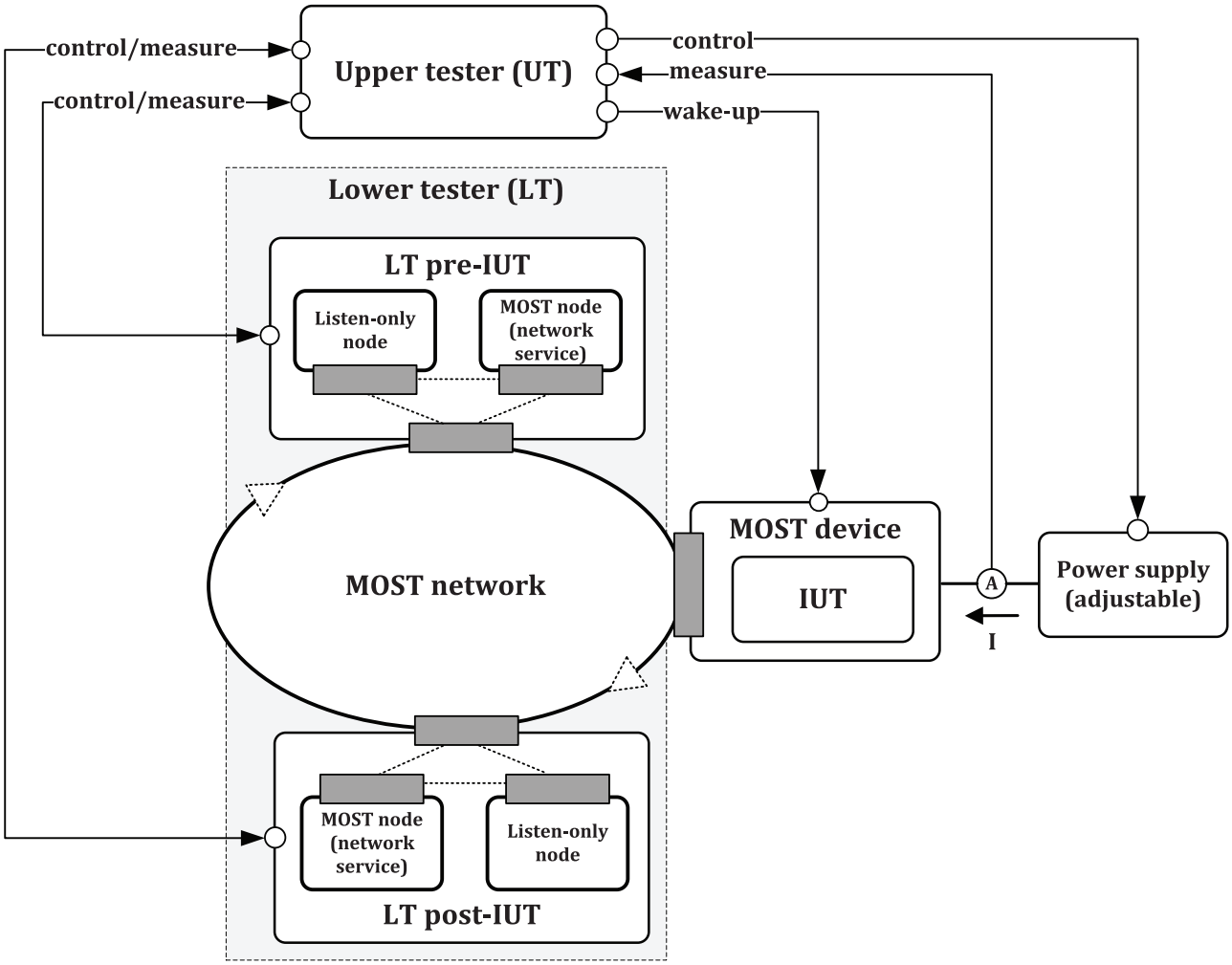

Figure 3 — Test set-up

The LT pre-IUT and the LT post-IUT implement the application layer services and the lower layer services of a MOST node in accordance with the ISO 21806 series. They also contain a listen-only node in front of the MOST node to log the whole communication. The MOST node is able to operate as TimingMaster or TimingSlave; alternatively, it can be physically disconnected from the MOST network. If it is disconnected, the associated LT pre-IUT or LT post-IUT serves as listen-only node.

Every CTC specifies the roles of the LT pre-IUT and the LT post-IUT.

During testing of the MOST device that implements the IUT, avoid over-temperature by following the manufacturer recommendations regarding cooling.

The power supply of the MOST device that contains the IUT is adjustable and the power consumption can be monitored by the UT. This is necessary to determine whether a node has entered `s_NetInterface_Sleep`.

A MOST device contains one or more nodes, which are connected to an external MOST physical interface. One of the nodes contains the implementation under test (IUT). All tests and timings, specified by the CTP, are related to the external MOST physical interface.

Figure 4 shows a MOST device with one node and a MOST device with three nodes.

© ISO 2020 – All rights reserved

Documents
Document Sharing Hub
Full document details: ISO 21806-5-2020

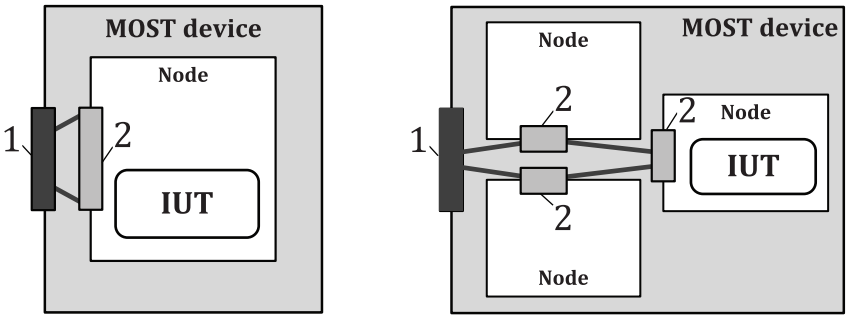

1 external MOST physical interface

2 internal MOST physical interface

Figure 4 — MOST device with one node and MOST device with three nodes

6.2 CTP organisation

CTCs are independent of one another. Each CTC checks the behaviour of the IUT for requirements stated in ISO 21806-4. Within CTCs, which require variations of individual parameters, each specified value of the parameter is iterated.

The measurement uncertainty for each CTC shall be in accordance with Annex A.

7 CTP general information

7.1 CTC remarks

7.1.1 Timer naming

For conformance testing of the IUT, the UT and LT need minimum and maximum timers. The names of the timers used by this document are based on ISO 21806-2 and ISO 21806-4. To obtain the timer name, for minimum and maximum, "_min" and "_max" are appended, respectively. Table 1 shows a timer naming definition example for t_{Config}.

Table 1 — Timer naming example

Name	Minimum value name	Typical value name	Maximum value name	Unit	Purpose
t_{Config}	t_{Config_min}	t_{Config}	t_{Config_max}	ms	Time before ev_Init_Error_Shutdown or delay for RBD result.

7.1.2 Deadlock prevention

This document specifies the timeouts $t_{DeadLockShort}$, $t_{DeadLockMid}$, and $t_{DeadLockLong}$ to prevent deadlock situations during conformance testing. These are the default values:

— $t_{DeadLockShort}$: 1 s;

— $t_{DeadLockMid}$: 20 s;

— $t_{DeadLockLong}$: 5 min.

These timeouts are only relevant for conformance testing and may be extended.

© ISO 2020 – All rights reserved
Documents
Document Sharing Hub
Full document details: ISO 21806-5-2020