INTERNATIONAL STANDARD

ISO 27971

Third edition
2023-06

Cereals and cereal products — Common wheat (*Triticum aestivum* L.) — Determination of Alveograph properties of dough at constant hydration from commercial or test flours and test milling methodology

*Céréales et produits céréaliers — Blé tendre (*Triticum aestivum L.*) — Détermination des propriétés alvéographiques d'une pâte à hydratation constante de farine industrielle ou d'essai et méthodologie pour la mouture d'essai*

Reference number
ISO 27971:2023(E)

Documents
Document Sharing Hub

© ISO 2023

Full document details: ISO 27971-2023

COPYRIGHT PROTECTED DOCUMENT

© ISO 2023

All rights reserved. Unless otherwise specified, or required in the context of its implementation, no part of this publication may be reproduced or utilized otherwise in any form or by any means, electronic or mechanical, including photocopying, or posting on the internet or an intranet, without prior written permission. Permission can be requested from either ISO at the address below or ISO's member body in the country of the requester.

ISO copyright office
CP 401 • Ch. de Blandonnet 8
CH-1214 Vernier, Geneva
Phone: +41 22 749 01 11
Email: copyright@iso.org
Website: www.iso.org

Published in Switzerland

© ISO 2023 – All rights reserved

Documents
Document Sharing Hub

Full document details: ISO 27971-2023

Contents

Page

Foreword ... **v**
Introduction ... **vi**
1 Scope ... **1**
2 Normative references ... **1**
3 Terms and definitions ... **1**
4 Principle ... **1**
5 Reagents ... **2**
6 Apparatus ... **2**
7 Sampling ... **6**
8 Preparation of the wheat for laboratory milling ... **6**
8.1 Cleaning the laboratory sample ... 6
8.2 Test portion ... 6
8.3 Wheat moisture content determination ... 6
8.4 Wheat preparation ... 6
8.4.1 General ... 6
8.4.2 Wheat with initial moisture content between 13 % and 15 % (one-stage moistening) ... 7
8.4.3 Wheat with a moisture content less than 13 % (two-stage moistening) ... 7
8.4.4 Wheat with a moisture content greater than 15 % (preliminary drying followed by moistening, as described above) ... 7
9 Laboratory milling ... **7**
9.1 General ... 7
9.2 Milling procedure ... 8
9.2.1 Breaking ... 8
9.2.2 Reduction ... 8
9.2.3 Flour homogenization ... 8
9.2.4 Storage of the flour ... 9
9.3 Expression of milling results ... 9
10 Preparation and Alveograph test ... **9**
10.1 Preliminary checks ... 9
10.2 Preliminary operations ... 10
10.3 Kneading ... 12
10.4 Preparation of dough test pieces ... 14
10.5 Alveograph test ... 15
10.5.1 Initial preparation ... 15
10.5.2 First operation: placing the patty on the lower plate ... 15
10.5.3 Second operation: biaxial extension ... 17
10.6 Expression of Alveograph test results ... 17
10.6.1 General ... 17
10.6.2 Maximum pressure parameter, P ... 18
10.6.3 Mean abscissa at rupture, L ... 18
10.6.4 Swelling index, G ... 18
10.6.5 Elasticity index, I_e ... 19
10.6.6 Curve configuration ratio, P/L ... 19
10.6.7 Deformation work, W ... 19
11 Precision ... **19**
11.1 Interlaboratory tests ... 19
11.1.1 Commercial flour ... 19
11.1.2 Flour obtained from laboratory milling ... 19
11.2 Repeatability limits ... 20

© ISO 2023 – All rights reserved

AVA Documents
Document Sharing Hub
Full document details: ISO 27971-2023

11.2.1 General ... 20
11.2.2 Commercial flour — Limits established by the interlaboratory test ... 20
11.2.3 Flour obtained from laboratory milling ... 20
11.3 Reproducibility limits ... 21
11.3.1 General ... 21
11.3.2 Commercial flour — Limits established by the proficiency tests ... 21
11.3.3 Flour obtained from laboratory milling ... 22
11.4 Uncertainty ... 22
12 Test report ... 22
Annex A (informative) **Characteristics of the mill suitable for obtaining a laboratory milled flour ... 23**
Annex B (normative) **Quantity of water to be added to wheat for conditioning ... 25**
Annex C (informative) **Sample milling sheet ... 26**
Annex D (informative) **Conversion table from *L* to *G* ... 28**
Annex E (informative) **Interlaboratory and proficiency test data for commercial flours ... 30**
Annex F (informative) **Interlaboratory data for laboratory milled flour ... 40**
Annex G (informative) **Routine maintenance instructions for the Alveograph ... 52**
Annex H (informative) **Assessment of proteolytic activity in wheat (*T. aestivum* L.) or flour ... 54**
Bibliography ... 56

© ISO 2023 – All rights reserved
Documents
Document Sharing Hub
Full document details: ISO 27971-2023

Foreword

ISO (the International Organization for Standardization) is a worldwide federation of national standards bodies (ISO member bodies). The work of preparing International Standards is normally carried out through ISO technical committees. Each member body interested in a subject for which a technical committee has been established has the right to be represented on that committee. International organizations, governmental and non-governmental, in liaison with ISO, also take part in the work. ISO collaborates closely with the International Electrotechnical Commission (IEC) on all matters of electrotechnical standardization.

The procedures used to develop this document and those intended for its further maintenance are described in the ISO/IEC Directives, Part 1. In particular, the different approval criteria needed for the different types of ISO document should be noted. This document was drafted in accordance with the editorial rules of the ISO/IEC Directives, Part 2 (see www.iso.org/directives).

ISO draws attention to the possibility that the implementation of this document may involve the use of (a) patent(s). ISO takes no position concerning the evidence, validity or applicability of any claimed patent rights in respect thereof. As of the date of publication of this document, ISO had not received notice of (a) patent(s) which may be required to implement this document. However, implementers are cautioned that this may not represent the latest information, which may be obtained from the patent database available at www.iso.org/patents. ISO shall not be held responsible for identifying any or all such patent rights.

Any trade name used in this document is information given for the convenience of users and does not constitute an endorsement.

For an explanation of the voluntary nature of standards, the meaning of ISO specific terms and expressions related to conformity assessment, as well as information about ISO's adherence to the World Trade Organization (WTO) principles in the Technical Barriers to Trade (TBT), see www.iso.org/iso/foreword.html.

This document was prepared by Technical Committee ISO/TC 34, *Food products*, Subcommittee SC 4, *Cereals and pulses*, in collaboration with the European Committee for Standardization (CEN) Technical Committee CEN/TC 338, *Cereal and cereal products,* in accordance with the Agreement on technical cooperation between ISO and CEN (Vienna Agreement).

This third edition cancels and replaces the second edition (ISO 27971:2015), which has been technically revised.

The main changes are as follows:

— the oldest instruments (before AlveoNG) have been removed;

— the latest instruments (AlveoPC and Alveolab) have been added.

Any feedback or questions on this document should be directed to the user's national standards body. A complete listing of these bodies can be found at www.iso.org/members.html.

© ISO 2023 – All rights reserved

Documents
Document Sharing Hub
Full document details: ISO 27971-2023

Introduction

The end-use value of wheat is determined by a number of properties that are useful in the manufacture of baked products such as bread, rusks and biscuits.

Such properties include the important viscoelastic (rheological) properties of dough formed as a result of flour hydration and kneading. An Alveograph is used to study the main parameters by subjecting a dough test piece to biaxial extension (producing a dough bubble) by inflating it with air, which is similar to the deformation to which it is subjected during bread dough fermentation.

Recording the pressure generated inside the bubble throughout the deformation of the dough test piece until it ruptures provides information on the following:

a) The resistance of the dough to deformation, or its stiffness. It is expressed by the maximum pressure parameter, *P*.

b) The extensibility or the possibility of inflating the dough to form a bubble. It is expressed by the mean of the abscissa value at rupture, *L*, converted to the swelling index, *G*.

c) The elasticity of the dough during biaxial extension. It is expressed by the elasticity index, I_e.

d) The work required to deform the dough bubble until it ruptures, or its strength, which is proportional to the area of the Alveogram (sum of the pressures throughout the deformation process). It is expressed by the parameter, *W*.

The *P*/*L* ratio is a measurement of the balance between stiffness and extensibility.

Alveographs are commonly used throughout the wheat and flour industry, for the following purposes:

— selecting and assessing different varieties of wheat and marketing batches of wheat;

— blending different batches of wheat or flour to produce a batch with given values for the Alveographic criteria (*W*, *P*, and *L*) complying with the proportional laws of blending;

— assessing the proteolytic activity in wheat or flour to detect possible contamination (see Annex H for more details).

Alveographs are used both on the upstream side of the industry for marketing, selecting and assessing the different wheat varieties and on the downstream side throughout the baking industries (see References [9], [11], [12] and [13]).

© ISO 2023 – All rights reserved
Documents
Document Sharing Hub
Full document details: ISO 27971-2023

Cereals and cereal products — Common wheat (*Triticum aestivum* L.) — Determination of Alveograph properties of dough at constant hydration from commercial or test flours and test milling methodology

1 Scope

This document specifies a method of determining, using an Alveograph, the rheological properties of different types of dough obtained from common wheat flour (*Triticum aestivum* L.) produced by industrial milling or laboratory milling.

It describes the Alveograph test and how to use a laboratory mill to produce flour in two stages:

— stage 1: preparation of the wheat grain for milling to make it easier to separate the bran from the endosperm;

— stage 2: the milling process, including breaking between three fluted rollers, reduction of particle size between two smooth rollers and the use of a centrifugal sieving machine to grade the products.

2 Normative references

The following documents are referred to in the text in such a way that some or all of their content constitutes requirements of this document. For dated references, only the edition cited applies. For undated references, the latest edition of the referenced document (including any amendments) applies.

ISO 835, *Laboratory glassware — Graduated pipettes*

ISO 712, *Cereals and cereal products — Determination of moisture content — Reference method*

ISO 1042, *Laboratory glassware — One-mark volumetric flasks*

ISO 12099, *Animal feeding stuffs, cereals and milled cereal products — Guidelines for the application of near infrared spectrometry*

3 Terms and definitions

No terms and definitions are listed in this document.

ISO and IEC maintain terminology databases for use in standardization at the following addresses:

— ISO Online browsing platform: available at https://www.iso.org/obp

— IEC Electropedia: available at https://www.electropedia.org/

4 Principle

The behaviour of dough obtained from a mixture of flour and salt water is evaluated during deformation. A dough disk (patty) is subjected to a constant air flow. At first it withstands the pressure. Subsequently, it inflates into a bubble, according to its extensibility, and ruptures. The change in the dough is measured and recorded in the form of a curve called an “Alveogram”.

© ISO 2023 – All rights reserved

Documents
Document Sharing Hub
Full document details: ISO 27971-2023

5 Reagents

Unless otherwise specified, use only reagents of recognized analytical grade, and only distilled or demineralized water or water of equivalent purity.

5.1 Sodium chloride solution, obtained by dissolving (25 ± 0,2) g of sodium chloride (NaCl) in water and then making the volume up to 1 000 ml. This solution shall not be stored for more than 15 days and its temperature shall be (20 ± 2) °C when used.

5.2 Refined vegetable oil, low in polyunsaturates, such as peanut oil. It is possible to use olive oil if its acid value is less than 0,4 (determined in accordance with ISO 660[1]). Store in a dark place in a closed container and replace regularly (at least every three months).

Alternatively, **liquid paraffin** (also known as "soft petroleum paraffin"), with an acid value of less than or equal to 0,05 and the lowest possible viscosity [maximum 60 mPa·s (60 cP) at 20 °C].

5.3 Cold degreasing agent, optimum safety.

6 Apparatus

The usual laboratory apparatus and, in particular, the following shall be used.

6.1 Mechanical cleaner, fitted with sieves for wheat cleaning, in accordance with the manufacturer's instructions.

6.2 Conical or riffle sample divider.

6.3 Analytical balance, accurate to 0,01 g.

6.4 Glass burette, of 50 ml in capacity, graduated in 1 ml divisions.

6.5 Rotary blender[1)], for grain conditioning and flour homogenization, including the following components:

6.5.1 Constant speed stirrer.

6.5.2 Two worm screws integral with the flask, possibly via the stopper (one for wheat preparation, the other for flour homogenization).

6.5.3 Several wide-necked plastic flasks, 2 l capacity.

6.6 Test mill (laboratory mill)[2)], manually or automatically operated (see Annex A).

1) The CHOPIN Technologies MR2L rotary blender is an example of a suitable product available commercially. This information is given for the convenience of users of this document and does not constitute an endorsement by ISO of this product.

2) The CHOPIN Technologies Chopin-Dubois CD1 test mill is an example of a suitable product available commercially. This information is given for the convenience of users of this document and does not constitute an endorsement by ISO of this product.

© ISO 2023 – All rights reserved
Documents
Document Sharing Hub
Full document details: ISO 27971-2023

6.7 Complete Alveograph system (see Table 1 for specifications and characteristics of the accessories) including the devices given in 6.7.1 to 6.7.3.

6.7.1 Kneading machine (see Figure 1 for the AlveoNG and AlveoPC models, and Figure 2 for the Alveolab model[3)]), with accurate temperature control, for dough sample preparation.

6.7.2 Dedicated software, to record the pressure curve as a function of time, perform the calculations and store the tests or other registration systems such as the Alveolink.

NOTE For details concerning the use of the different registration systems, see the manufacturer's instructions.

6.7.3 Alveograph[3)], for measuring the biaxial deformation of the dough test pieces (see Figure 1 for the AlveoNG and AlveoPC models, and Figure 2 for the Alveolab model), including accurate temperature control and hygrometry control for the Alveolab model, and having two rest chambers (three for the Alveolab), each containing five plates on which the dough test pieces can be arranged to rest prior to deformation.

6.8 Burette with stopcock, supplied with the apparatus (only for the AlveoNG and AlveoPC models), 160 ml capacity, graduated in divisions of 0,1 % of moisture content.

NOTE Throughout this document, "content" is expressed as a "mass fraction" (see ISO 80000-9[8]), i.e. the ratio of the mass of substance in a mixture to the total mass of the mixture.

6.9 Thermohydrograph for recording the test environment conditions (temperature and relative air humidity) as specified in 9.1 and 10.1. In the case of the Alveolab, the test conditions (temperature and humidity) around the swelling bubble are automatically checked and controlled by the device.

6.10 Volumetric flask, 1 000 ml capacity, conforming to the requirements of ISO 1042, class A.

6.11 Pipette, 25 ml capacity, graduated in divisions of 0,1 ml, conforming to the requirements of ISO 835, class A.

3) The methods specified in this document are based on the use of the AlveoNG, AlveoPC and Alveolab models of the CHOPIN Technologies Alveograph, which are examples of suitable products available commercially. This information is given for the convenience of users of this document and does not constitute an endorsement by ISO of these products.

© ISO 2023 – All rights reserved

Documents
Document Sharing Hub
Full document details: ISO 27971-2023

Table 1 — Specifications and characteristics of the accessories required for the test

Quantity	Value and tolerance
Rotational frequency of the kneading blade	(60 ± 2) Hz
Height of sheeting guides	(12,0 ± 0,1) mm
Large diameter of the sheeting roller	(40,0 ± 0,1) mm
Small diameter of the sheeting roller	(33,3 ± 0,1) mm
Inside diameter of the dough cutter	(46,0 ± 0,5) mm
Diameter of the aperture created when the moving plate opens (which determines the effective diameter of the test piece)	(55,0 ± 0,1) mm
Theoretical distance between the fixed and moving plates after clamping (equal to the thickness of the test piece before inflation)	(2,67 ± 0,01) mm
Volume of air automatically injected to detach the test piece prior to inflating the bubble	(18 ± 2) ml
Air flow[a] ensuring inflation	(96 ± 2) l/h

[a] On the AlveoNG and AlveoPC models, to adjust the flow rate of the air generator used to inflate the bubble, fit the nozzle (see Figure 3) to create a specified pressure drop (and obtain a pressure corresponding to a height of 92 mmH_2O (12,3 kPa) on the manometer chart). The air flow rate is set with the standardized pressure drop to obtain a pressure corresponding to a height of 60 mm H_2O (8,0 kPa) on the manometer chart, i.e. (96 ± 2) l/h (see Figure 4). For the Alveolab model, this control is automatized, and no particular action is required.

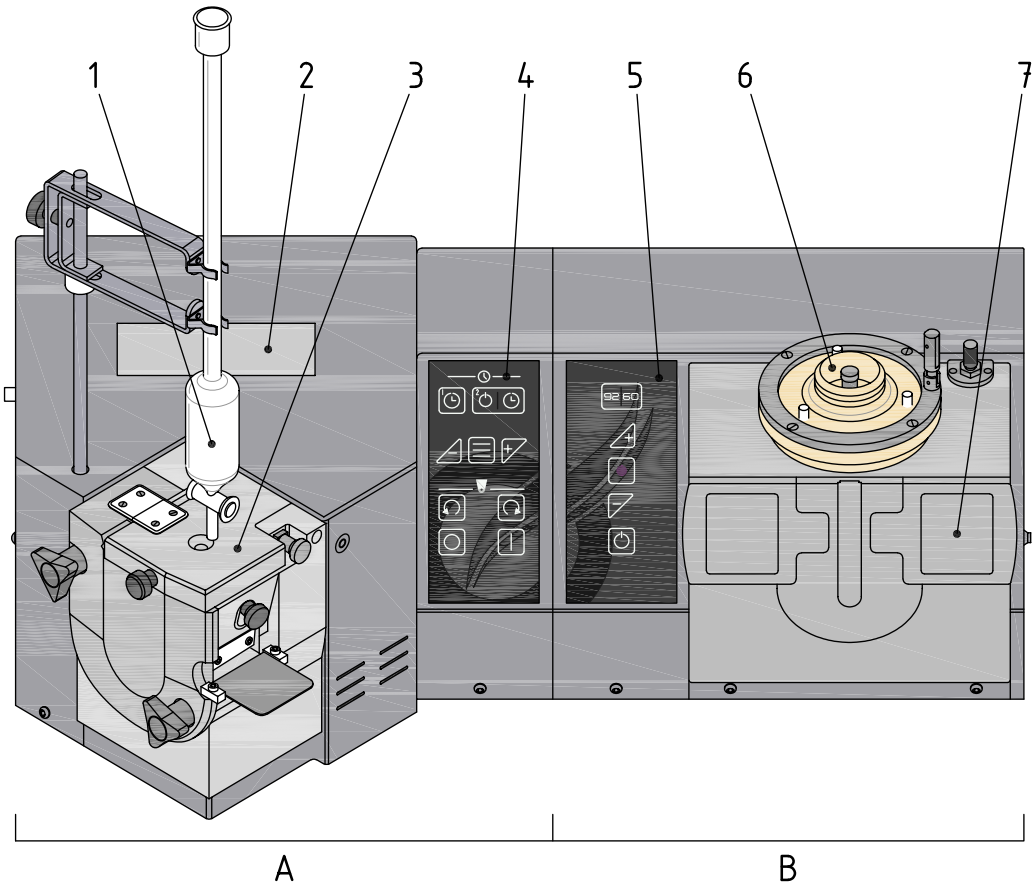

Key

A mixer
B Alveograph
1 burette for adding water
2 mixer screen
4 mixer control panel
5 Alveograph control panel
6 test plate of the Alveograph unit
7 resting chamber

© ISO 2023 – All rights reserved
Documents
Document Sharing Hub
Full document details: ISO 27971-2023

3 mixing bowl

Figure 1 — Mixer and Alveograph part of the AlveoNG and AlveoPC models

Key

1 mixing bowl
2 water injection nozzle
3 Aveolab control panel
4 Alveograph test chamber
5 storage compartment for accessories
6 dough collector and humidifier
7 resting chamber
8 salt water tank

Figure 2 — Mixer and Alveograph part of the Alveolab model

© ISO 2023 – All rights reserved

Documents
Document Sharing Hub
Full document details: ISO 27971-2023

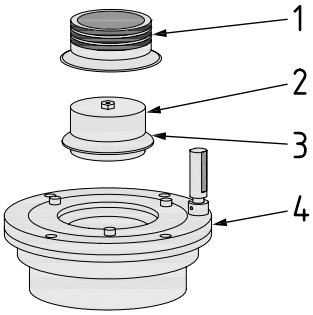

Key

1 knurled ring
2 nozzle
3 nozzle holder
4 top plate

Figure 3 — Flow control system for the AlveoNG or AlveoPC models

7 Sampling

A representative wheat or flour sample should be sent to the laboratory. It shall not be damaged or changed during transport or storage.

Sampling is not part of the method specified in this document. Recommended sampling methods are given in ISO 24333[7].

8 Preparation of the wheat for laboratory milling

8.1 Cleaning the laboratory sample

If necessary, pass the laboratory sample through a mechanical cleaner (6.1) to ensure that all stones and metal fragments are removed and to avoid damaging the rollers during milling. A magnetic device may also be used to remove ferrous metal fragments.

8.2 Test portion

The test portion shall be representative of the initial wheat mass. Use the sample divider (6.2) to homogenize and divide the laboratory sample until the mass required for laboratory milling plus moisture content determination is obtained. The minimum wheat mass of the test portion for milling shall be 800 g.

8.3 Wheat moisture content determination

Determine the moisture content of the test portion as specified in ISO 712, or using a rapid device (see ISO 7700-1[6] or ISO 12099).

8.4 Wheat preparation

8.4.1 General

Preparing the wheat for milling makes it easier to separate the bran from the endosperm. The target moisture content is (16,0 ± 0,5) %.

© ISO 2023 – All rights reserved
Documents
Document Sharing Hub
Full document details: ISO 27971-2023

8.4.2 Wheat with initial moisture content between 13 % and 15 % (one-stage moistening)

Using the balance (6.3), weigh a test portion (minimum 800 g) to the nearest 1 g of wheat and pour it into the blender.

Add the required amount of water (see Table B.1) to the grain from the burette (6.4) directly, or after weighing it to the nearest 0,5 g.

Immediately after adding the water, insert the stopper fitted with the worm screw provided for use with wheat into the flask, shake vigorously for a few seconds and place on the rotary blender (6.5).

Run the rotary blender for (30 ± 5) min (the time required to distribute the water evenly across the surface of the grains).

Allow it to rest for a period that brings the total time of the moistening, shaking and resting operations to (24 ± 1) h.

8.4.3 Wheat with a moisture content less than 13 % (two-stage moistening)

Since a larger volume of water is required, divide it into two halves and add in two stages during the preparation period.

Proceed as described in 8.4.2, using only half the total quantity of water required (see Table B.1).

Shake the flask as described in 8.4.2 and allow it to rest for at least 6 h.

Then add the second half of the total quantity of water between the sixth and seventh hour.

After adding the second half, shake the flask again for (30 ± 5) min, then allow it to rest for a period that brings the total time of the moistening, shaking and resting operations to (24 ± 1) h.

8.4.4 Wheat with a moisture content greater than 15 % (preliminary drying followed by moistening, as described above)

The wheat shall be dried to produce a moisture content lower than 15 %.

Spread the laboratory sample in a thin layer to optimize the exchange between the grain and the air. Allow to dry in the open air in a dry place for at least 15 h.

Perform the moisture content determination process again (see 8.3).

Then prepare the wheat as specified in 8.4.2 or 8.4.3, depending on the new moisture content.

9 Laboratory milling

9.1 General

The test mill (6.6) shall be used with the manufacturer's settings. Additional weights shall not be used and the tension on the reduction side spring shall not be changed.

The quality of the milling process depends on several factors:

a) environmental conditions that allow the final moisture content of the flour to be between 15,0 % and 15,8 % (wheat should be milled in an ambient temperature between 18 °C and 23 °C with a relative air humidity between 50 % and 75 %);

b) condition of the sieves; the sieving area shall remain uniform – if a sieve is pierced, it shall be replaced immediately;

c) beater condition and setting: worn blades reduce the extraction rate;

© ISO 2023 – All rights reserved

Documents
Document Sharing Hub
Full document details: ISO 27971-2023

d) compliance with flow rates: the efficiency of the roll and the efficiency of the sieving process are strictly dependent on a regular feed rate.

NOTE The speed at which the products pass through the sieving drum can be set by adjusting the position of the blades on the beaters, i.e. two adjustable blades in the middle and at the end of the beater on the break side, and four blades at the end on the reduction side.

9.2 Milling procedure

9.2.1 Breaking

Switch on the device.

Set the feed rate to allow 800 g of conditioned wheat to pass through the mill in (5 ± 1) min.

Pour the conditioned wheat (8.4) into the mill feed hopper and, at the same time, start the timer to check the milling time.

After the last grains of wheat have passed through, let the mill continue to operate for (180 ± 30) s to completely clear out the sieve.

When the mill stops, weigh (6.3), separately, the bran, the semolina and the flour to the nearest 0,1 g.

Calculate the percentage of semolina obtained compared with the mass of wheat used, expressing the result to one decimal place.

9.2.2 Reduction

Switch on the device.

Adjust the feed rate to allow the semolina produced in 9.2.1 to pass through the mill in (5 ± 1) min.

Pour the semolina into the feed hopper and, at the same time, start the timer to check the time.

After the last grains of semolina have passed through, let the mill continue to operate for (180 ± 30) s to completely clear out the sieve.

Repeat the above reduction procedure if the mass of semolina obtained from the break system is greater than or equal to 48 % of the mass of conditioned wheat. (Round up the values: 47,4 becomes 47 and 47,5 becomes 48.)

When the mill stops, weigh (6.3), separately, the middlings and the reduction flour to the nearest 0,1 g.

Ensure that the milling ratio (ratio of the sum of the masses of the milled products to the total conditioned wheat mass) is equal to at least 98 %.

NOTE A milling ratio less than 98 % indicates excessively worn beaters or an obstruction in the sieves, causing some of the product to remain inside the sieving drum.

9.2.3 Flour homogenization

Pour the break and reduction flour into the blender flask (6.5.3).

Insert the stopper fitted with the worm screw (6.5.2) provided for use with flour into the flask and place the flask on the blender (6.5).

Mix for (20 ± 2) min.

Remove the worm screw (6.5.2) and replace it with the flask stopper. The flour is now ready for the Alveograph test.

© ISO 2023 – All rights reserved
Documents
Document Sharing Hub
Full document details: ISO 27971-2023

9.2.4 Storage of the flour

The flask containing the flour shall be kept in the room where the Alveograph test is performed.

9.3 Expression of milling results

Calculate the extraction rate, ER, as a percentage of dry mass, of flour extracted from the cleaned wheat using Formula (1):

$$\mathrm{ER} = \frac{(100 - H_\mathrm{f}) \times M_\mathrm{f}}{(100 - H_\mathrm{b}) \times M_\mathrm{b}} \times 100 \tag{1}$$

where

H_f is the moisture content, as a percentage, of the flour obtained (determined in accordance with ISO 712 or ISO 12099);

H_b is the moisture content, as a percentage, of the wheat test portion for milling before moistening (determined in accordance with ISO 712 or ISO 12099);

M_f is the mass, in grams, of the total flour obtained;

M_b is the wheat mass, in grams, of the test portion for milling before moistening.

Express the result to the nearest 0,1 % mass fraction.

Calculate the percentage of bran, S, using Formula (2):

$$S = [M_\mathrm{s} / (M_\mathrm{b} + M_\mathrm{e})] \times 100 \tag{2}$$

Calculate the percentage of middlings, R, using Formula (3):

$$R = [M_\mathrm{r} / (M_\mathrm{b} + M_\mathrm{e})] \times 100 \tag{3}$$

where

M_s is the mass, in grams, of bran;

M_r is the mass, in grams, of middlings;

M_b is the initial mass, in grams, of the wheat before conditioning;

M_e is the mass, in grams, of water added (numerically equal to the volume, V_e, in millilitres, of water added).

Express the results to the nearest integer.

NOTE Annex C provides an example of a milling sheet to follow all interesting results.

10 Preparation and Alveograph test

10.1 Preliminary checks

Ensure that the ambient temperature is between 18 °C and 22 °C with a relative humidity between 50 % and 80 %.

Ensure that the various components of the apparatus (kneading machine, Alveograph, burette, tools, etc.) are clean.

© ISO 2023 – All rights reserved

Documents
Document Sharing Hub
Full document details: ISO 27971-2023

Check that the *F*-register (see Figure 5) is in place in the extrusion aperture to prevent any loss of flour or salt solution leakage.

Ensure that the temperature of the kneading machine (6.7.1) at the start of the test is (24,0 ± 0,5) °C. The temperature of the Alveograph shall be continuously set to (25,0 ± 0,5) °C.

A rise in the kneading machine temperature during the kneading process is normal and characteristic of flour under test. The continuous control feature provided on the AlveoNG model should not be used.

Regularly check that the pneumatic circuit on the apparatus is sealed (no air leakage) by following the manufacturer's recommended procedure.

Check that the Alveograph plate is horizontal.

For the AlveoNG and AlveoPC models:

— check the air flow settings using the nozzle (see Table 1, footnote [a]) are creating the specified loss of pressure (see Figures 3 and 4 c)):

  — the air generator to a pressure corresponding to 92 mmH_2O (12,3 kPa) on the recorder screen (see Figure 4 a));

  — the micrometer flow rate valve to a pressure corresponding to 60 mmH_2O (8,0 kPa) on the recorder screen (see Figure 4 b)).

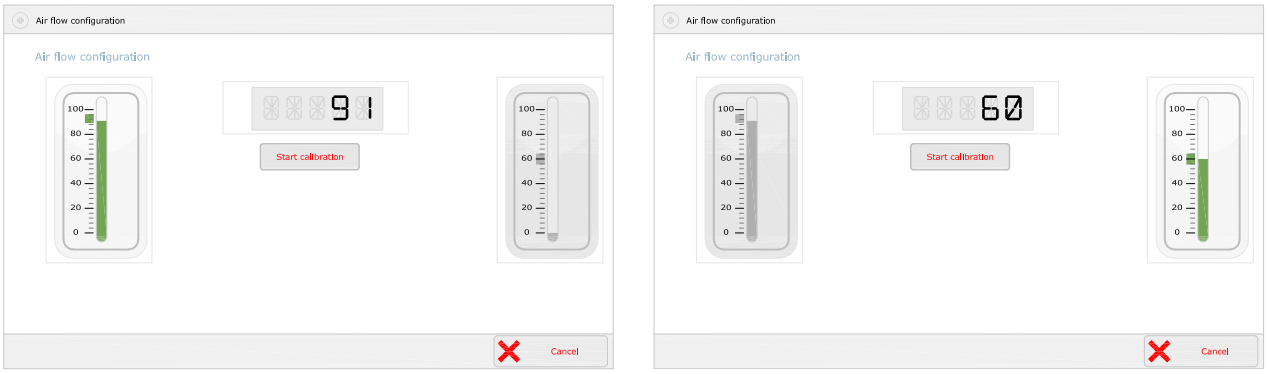

a) 92 adjustment **b) 60 adjustment**

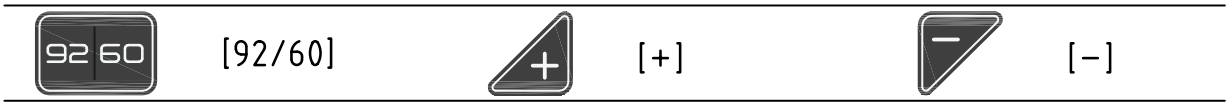

c) Command panel

Figure 4 — Measurement pressure setting

10.2 Preliminary operations

At the beginning of the test, the temperature of the flour shall be the ambient temperature.

Determine the moisture content of the flour in accordance with the method specified in ISO 712 or with an apparatus using near infrared spectroscopy whose performance has been demonstrated in accordance with ISO 12099. From Table 2, find the quantity of sodium chloride solution (5.1) to be used in 10.3 to prepare the dough.

For the AlveoNG and AlveoPC models, using Table 2, note the quantity of sodium chloride solution (5.1) to be used in 10.3 to prepare the dough.

© ISO 2023 – All rights reserved
Documents
Document Sharing Hub
Full document details: ISO 27971-2023

For Alveolab model:

— Prepare the salt solution and place it in the tank provided for this purpose in the device.

— Check the level of the humidifier by opening the hatch of the dough collecting tray and top up if necessary. Use a pipette[4)] to avoid water overflowing into the compartment.

— Before the first try of the day, the upper and lower plates shall be oiled.

Table 2 — Volume of sodium chloride solution to be added during kneading

Moisture content of the flour %	Volume of solution to be added ml	Moisture content of the flour %	Volume of solution to be added ml	Moisture content of the flour %	Volume of solution to be added ml
8,0	155,9	11,0	142,6	14,0	129,4
8,1	155,4	11,1	142,2	14,1	129,0
8,2	155,0	11,2	141,8	14,2	128,5
8,3	154,6	11,3	141,3	14,3	128,1
8,4	154,1	11,4	140,9	14,4	127,6
8,5	153,7	11,5	140,4	14,5	127,2
8,6	153,2	11,6	140,0	14,6	126,8
8,7	152,8	11,7	139,6	14,7	126,3
8,8	152,4	11,8	139,1	14,8	125,9
8,9	151,9	11,9	138,7	14,9	125,4
9,0	151,5	12,0	138,2	15,0	125,0
9,1	151,0	12,1	137,8	15,1	124,6
9,2	150,6	12,2	137,4	15,2	124,1
9,3	150,1	12,3	136,9	15,3	123,7
9,4	149,7	12,4	136,5	15,4	123,2
9,5	149,3	12,5	136,0	15,5	122,8
9,6	148,8	12,6	135,6	15,6	122,4
9,7	148,4	12,7	135,1	15,7	121,9
9,8	147,9	12,8	134,7	15,8	121,5
9,9	147,5	12,9	134,3	15,9	121,0
10,0	147,1	13,0	133,8	16,0	120,6
10,1	146,6	13,1	133,4		
10,2	146,2	13,2	132,9		
10,3	145,7	13,3	132,5		
10,4	145,3	13,4	132,1		
10,5	144,9	13,5	131,6		

NOTE The volume of sodium chloride solution (5.1), V_{NaCl}, to be added during kneading is calculated from the formula:

$$V_{NaCl} = 191{,}175 - (4{,}411\ 75 \times H_f)$$

where H_f is the moisture content of the flour.

These values have been calculated to obtain constant hydration, i.e. equivalent to a dough made from 50 ml of sodium chloride solution (5.1) and 100 g of flour with a moisture content of 15 %.

4) The pipette provided with the CHOPIN Technologies Alveolab is an example of suitable product available commercially. This information is given for the convenience of users of this document and does not constitute an endorsement by ISO of this product.

© ISO 2023 – All rights reserved

Documents
Document Sharing Hub
Full document details: ISO 27971-2023

Table 2 *(continued)*

Moisture content of the flour %	Volume of solution to be added ml	Moisture content of the flour %	Volume of solution to be added ml	Moisture content of the flour %	Volume of solution to be added ml
10,6	144,4	13,6	131,2		
10,7	144,0	13,7	130,7		
10,8	143,5	13,8	130,3		
10,9	143,1	13,9	129,9		

NOTE The volume of sodium chloride solution (5.1), V_{NaCl}, to be added during kneading is calculated from the formula:

$$V_{NaCl} = 191{,}175 - (4{,}411\ 75 \times H_f)$$

where H_f is the moisture content of the flour.

These values have been calculated to obtain constant hydration, i.e. equivalent to a dough made from 50 ml of sodium chloride solution (5.1) and 100 g of flour with a moisture content of 15 %.

10.3 Kneading

Place 250 ± 0,5 g of flour in the kneading machine (6.7.1). Secure the lid with the locking device.

At the same time, switch on the motor.

For the AlveoNG and AlveoPC models, use a burette (6.8) to deliver the appropriate quantity of sodium chloride solution (5.1) through the hole in the cover.

If the moisture content of the flour is less than 10,5 %, use the burette (6.8) to add a quantity of sodium chloride solution corresponding to a moisture content of 12 %, i.e. 138,2 ml. With a pipette (6.11), add a quantity of sodium chloride solution equal to the difference between the value given in Table 2 and the 138,2 ml already in the machine.

For the Alveolab model, when preparing the test, indicate the water content of the flour, send the instructions of the test to the device and start the water dosage. Once this dosage has been carried out by the device, follow the indications appearing on the screen and position the water injection nozzle on the tank.

Allow the dough to form for 1 min, then switch off the motor, open the cover and, using the plastic spatula provided, reincorporate any flour and dough adhering to the *F*-register (see Figure 5) and to the corners of the kneading machine. This operation should take less than 1 min. This operation can be performed in two parts, allowing the kneading machine to rotate about 10 times between the first and second operations.

Close the cover, then restart the motor and knead for 6 min. During this time, oil the accessories required for extrusion.

Stop kneading after a total of 8 min (corresponding to the sum of dough formation and reincorporation times), then extrude the dough test pieces.

© ISO 2023 – All rights reserved
Documents
Document Sharing Hub
Full document details: ISO 27971-2023

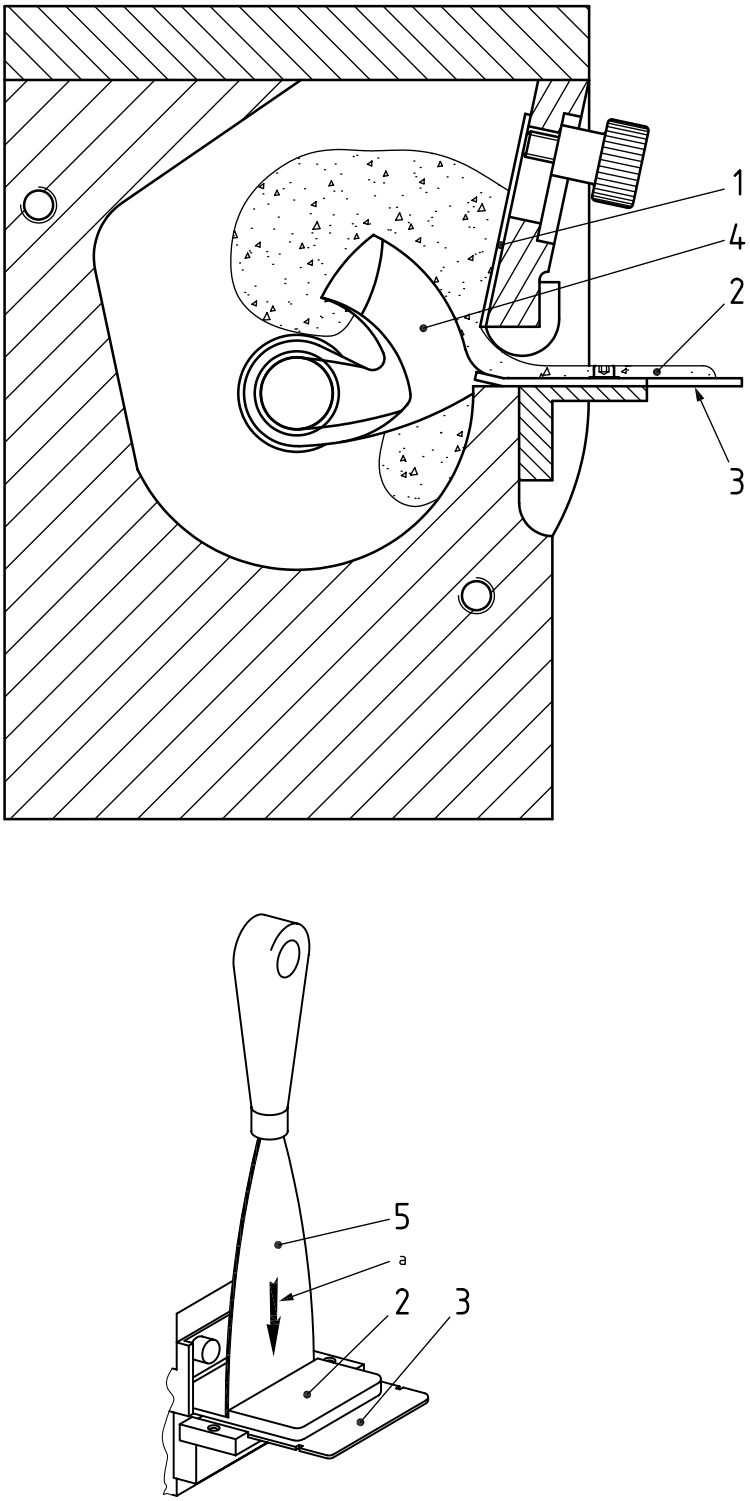

Key

1 *F*-register
2 dough
3 receiving plate
4 kneader blade
5 knife/spatula
a Direction of cutting the extruded dough.

Figure 5 — Dough extrusion and cutting

© ISO 2023 – All rights reserved

Documents
Document Sharing Hub
Full document details: ISO 27971-2023

10.4 Preparation of dough test pieces

Reverse the direction of rotation of the kneader blade. Open the extrusion aperture by raising the *F*-register and place a few drops of oil (5.2) on the previously installed receiving plate. Remove the first centimetre of dough using the knife/spatula in a clean, downward movement, close to the guide (see Figure 5).

When the strip of dough is level with the notches on the extrusion plate, quickly cut the dough with the knife/spatula. Slide the piece of dough onto the previously oiled stainless-steel plate on the sheeting table (see Figure 6).

Successively extrude five dough pieces without stopping the motor, replacing the previously oiled receiving plate each time. Arrange the first four dough pieces on the sheeting table so that their direction of extrusion corresponds to its major axis (see Figure 6). Leave the fifth dough piece on the extrusion plate. Stop the motor.

NOTE Experienced operators are able to sheet, cut, and transfer each dough piece to the rest chamber in the same amount of time it takes to extrude the next dough piece.

Sheet the four dough pieces using the previously oiled steel roller. Run the roller backwards and forwards along the rails 12 times in succession, six times in each direction (see Figure 6).

Using the cutter, cut a test piece from each strip of dough in one clean movement (see Figure 7). Remove any surplus dough.

Hold the cutter containing the dough test piece above the previously oiled resting plate to which it is to be transferred. If the dough sticks to the sides of the cutter, free it by tapping the work surface with the palm of the hand (do not touch with fingers). If the test piece remains on the stainless-steel plate on the sheeting table, raise it gently with the spatula and slide the resting plate under it.

Immediately place each resting plate containing a dough piece into the thermostatically controlled compartment of the Alveograph, heated to 25 °C. Proceed by order of extrusion, carefully noting the location of the first test piece.

Repeat the operations described above with the fifth dough piece.

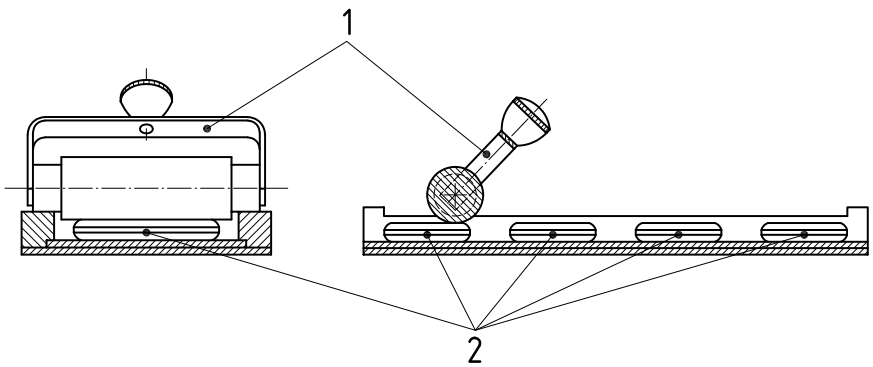

Key

1 steel roller

2 dough pieces

Figure 6 — Laminating the dough pieces

© ISO 2023 – All rights reserved
Documents
Document Sharing Hub
Full document details: ISO 27971-2023