International Standard ISO 3655

INTERNATIONAL ORGANIZATION FOR STANDARDIZATION•МЕЖДУНАРОДНАЯ ОРГАНИЗАЦИЯ ПО СТАНДАРТИЗАЦИИ•ORGANISATION INTERNATIONALE DE NORMALISATION

Acceptance conditions for vertical turning and boring lathes with one or two columns and a single fixed or movable table — General introduction and testing of the accuracy

Conditions de réception des tours verticaux à un ou deux montants, à un seul plateau fixe ou déplaçable — Introduction générale et contrôle de la précision

Second edition — 1986-05-01

UDC 621.914.4 **Ref. No. ISO 3655-1986 (E)**

Descriptors : machine tools, lathes, vertical boring- and turning lathes, definitions, tests, testing conditions, dimensional measurements, accuracy.

AVA Documents
Document Sharing Hub

Price based on 17 pages

Full document details: ISO 3655-1986

Foreword

ISO (the International Organization for Standardization) is a worldwide federation of national standards bodies (ISO member bodies). The work of preparing International Standards is normally carried out through ISO technical committees. Each member body interested in a subject for which a technical committee has been established has the right to be represented on that committee. International organizations, governmental and non-governmental, in liaison with ISO, also take part in the work.

Draft International Standards adopted by the technical committees are circulated to the member bodies for approval before their acceptance as International Standards by the ISO Council. They are approved in accordance with ISO procedures requiring at least 75 % approval by the member bodies voting.

International Standard ISO 3655 was prepared by Technical Committee ISO/TC 39, *Machine tools.*

This second edition cancels and replaces the first edition, published in two parts (ISO 3655/0-1976 and ISO 3655/1-1986), of which it constitutes a minor revision.

Users should note that all International Standards undergo revision from time to time and that any reference made herein to any other International Standard implies its latest edition, unless otherwise stated.

© **International Organization for Standardization, 1986** ●

Printed in Switzerland

AVA Documents
Document Sharing Hub

Full document details: ISO 3655-1986

Acceptance conditions for vertical turning and boring lathes with one or two columns and a single fixed or movable table — General introduction and testing of the accuracy

1 Scope and field of application

This International Standard defines machining operations on vertical turning and boring lathes with one or two columns and a single fixed or movable table. It defines and summarizes the different types of machines and establishes a glossary for the various types of machine tool. It indicates, with reference to ISO 230/1, both geometrical and practical tests for such vertical lathes, and gives the corresponding permissible deviations for general purpose use machines of normal accuracy.

NOTE — In addition to terms used in the three official ISO languages (English, French and Russian), this International Standard gives the equivalent terms in German, Italian and Swedish; these have been included at the request of Technical Committee ISO/TC 39 and are published under the responsibility of the member bodies for Germany F.R. (DIN), Italy (UNI) and Sweden (SIS). However, only the terms given in the official languages can be considered as ISO terms.

It deals only with the verification of accuracy of the machine. It does not apply to the running of the machine (vibrations, abnormal noises, stick-slip motion of components, etc.) or to machine characteristics (speeds, feeds, etc.), which should generally be checked before testing accuracy.

2 References

ISO 230/1, *Machine tools — Acceptance code for machine tools — Part 1: Geometric accuracy of the machine operating under no load or finishing conditions.*

ISO 841, *Numerical control of machines — Axis and motion nomenclature.*

ISO 1101, *Technical drawings — Geometrical tolerancing — Tolerancing of form, orientation, location and run-out — Generalities, definitions, symbols, indications on drawings.*

3 Definitions of the machining operations carried out on these machines

3.1 Turning operations

Turning consists of machining of internal or external, cylindrical or conical or other revolving surfaces by means of one or more single point cutting tools.

3.2 Facing operations

A vertical turning and boring lathe can also be used for machining flat surfaces, perpendicular to the axis of rotation of the table. This operation is called facing.

3.3 Threading operations

Threads of given pitches are machined on external or internal cylindrical surfaces by means of special thread form cutting tools.

3.4 Scroll cutting operations

Scroll (Archimedian spiral) cutting is the machining of spiral grooves in a surface perpendicular to the axis of rotation of the table.

4 Definition and description of the various types

The common characteristic of all vertical turning and boring lathes is that they have at least one circular table which revolves on a fixed or movable base. The axis of rotation of the table is vertical and the horizontal surface is used as a location face for workpiece location fixtures.

These machines fall into two categories characterized by type, i.e.:

- vertical turning and boring lathes with a single column;
- vertical turning and boring lathes with two columns.

In addition, in the machines of the first category or "single column lathes", there are machines with:

- fixed column and fixed table;
- fixed column and movable table;
- movable column and fixed table

AVA Documents
Document Sharing Hub

Full document details: ISO 3655-1986

Machines of the second category or "lathes with two columns" can be sub-divided into:

— machines with fixed columns and fixed table;

— machines with movable columns and fixed table;

— machines with fixed columns and movable table.

4.1 Vertical lathes with a single column (see 7.1)

This configuration relates to machines of small to medium capacity having a table diameter of between 630 and 2 500 mm (25 and 100 in) for machines with a fixed table, and of between 1 600 and 10 000 mm (63 and 400 in) for machines with a movable table or column.

4.1.1 Base, table, table support, column

For single column machines the table is supported by a base to which the column is rigidly attached. In certain cases the base and column are integral. In the case of machines with a movable table the world "bed" can be substituted for the word "base".

The table support consists of the base of the machine including the table drive and gear-box.

The table axis and the column slideways are located in parallel vertical planes.

4.1.2 Rail, side head and rams

The rail is an element the main slideways of which are perpendicular to the column slideways. It can be either fixed or movable. If the rail is fixed, it is rigidly connected to the column or in certain cases integral with the column; if movable, it slides along the vertical slideways of the column which are parallel to the table axis.

The rail has horizontal slideways on which either one or two railheads move.

These railheads carry a ram or a slide with vertical or inclined movement and on which a toolholder or turret is mounted.

In certain cases, the machine may have an additional head called a side head. This head is mounted at the side of the table and is guided by vertical slideways which are parallel to the rail vertical movement. It has a ram fitted with a toolholder or turret and has horizontal or inclined movement.

4.1.3 Cutting and feed movements

The cutting movement is generated by the table.

The machine can be fitted with the following feed movements:

— horizontal movement of the railhead or heads along the rail;

— vertical or inclined movement of the railhead ram or rams;

— vertical movement of the side head;

— horizontal or inclined movement of the side head ram.

These movements also generally have a "rapid traverse".

The vertical movement of the rail and, where applicable, the table or column movement on the bed, are only positioning movements and not feed movements.

4.2 Vertical lathes with two columns (see 7.2)

This configuration relates to machines with a large capacity having a table diameter of greater than 1 800 or 2 000 mm (72 or 80 in).

For this type of machine the table is supported by the base, which is rigidly attached to the right- and left-hand columns.

At their upper end the columns are connected by a solid member called the bridge. The upper part of the machine can have a front cover for aesthetic reasons.

4.2.1 Rail, railheads and rams

Vertical turning and boring lathes having two columns, with the exception of specially adapted machines, always have a rail which can be moved vertically.

The rail has horizontal slideways on which one or two railheads move.

The railheads carry a ram or slide with vertical or inclined movement, and on which a toolholder or turret is mounted.

In the case of a rail with two railheads, these are called the right- and left-hand railheads with respect to an operator standing in front of the machine.

In certain cases the machine can have a side head placed on the right-hand column and guided by vertical slideways parallel to the rail vertical movement. The side head ram may have horizontal or inclined movement. The side head may be fitted with a toolholder or turret.

4.2.2 Cutting and feed movements

The cutting movement is generated by the table. The machine may have the following feed movements:

— horizontal movement of the two railheads along the rail;

— vertical or inclined movement of the railhead ram or slide;

— horizontal or inclined movement of the side head ram;

— vertical movement of the side head.

The movements are also generally capable of "rapid traverse".

The vertical movement of the rail and, where applicable, the movement of the column on the base, are only positioning movements and are not feed movements.

AVA Documents
Document Sharing Hub

Full document details: ISO 3655-1986

4.3 Designation of axes

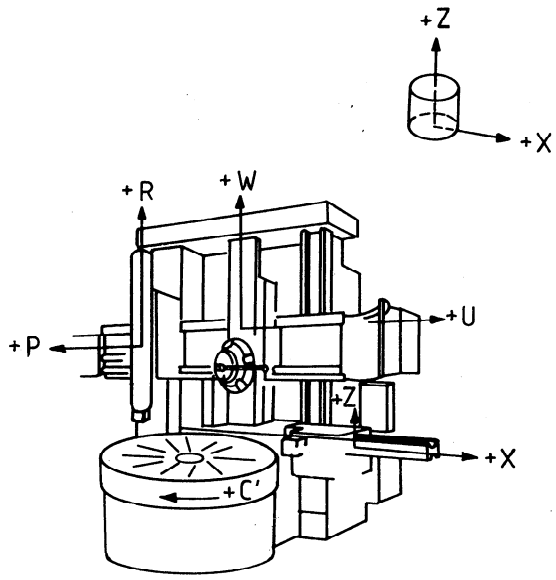

5 Preliminary remarks

5.1 In this International Standard, all dimensions and tolerances are expressed in millimetres and inches.

5.2 To apply this International Standard, reference should be made to ISO 230/1, especially for installation of the machine before testing, warming up of spindles and other moving parts, description of measuring methods and recommended accuracy of testing equipment.

5.3 The sequence in which the geometrical tests are given is related to the sub-assemblies of the machine and this in no way defines the practical order of testing. In order to make the mounting of instruments or gauging easier, tests may be applied in any order.

5.4 When inspecting a machine, it is not always necessary to carry out all the tests given in this International Standard. It is up to the user to choose, in agreement with the manufacturer, those relating to the properties which are of interest to him, but these tests are to be clearly stated when ordering a machine.

5.5 The practical tests shall be made with finishing cuts and not with roughing cuts which are liable to generate appreciable cutting forces.

5.6 When establishing the tolerance for a measuring range different from that given in this International Standard (see 2.311 in ISO 230/1) it should be borne in mind that the minimum tolerance value is 0,005 mm (0.000 2 in) for geometrical and practical tests.

5.7 For table or movable column machines, tests shall be carried out setting the column as near as possible to the axis of rotation of the table.

6 Diagrams

For reasons of simplicity, diagrams in this International Standard illustrate only typical designs of machines.

AVA Documents
Document Sharing Hub

Full document details: ISO 3655-1986

7 Nomenclature

7.1 Vertical lathe with a single column

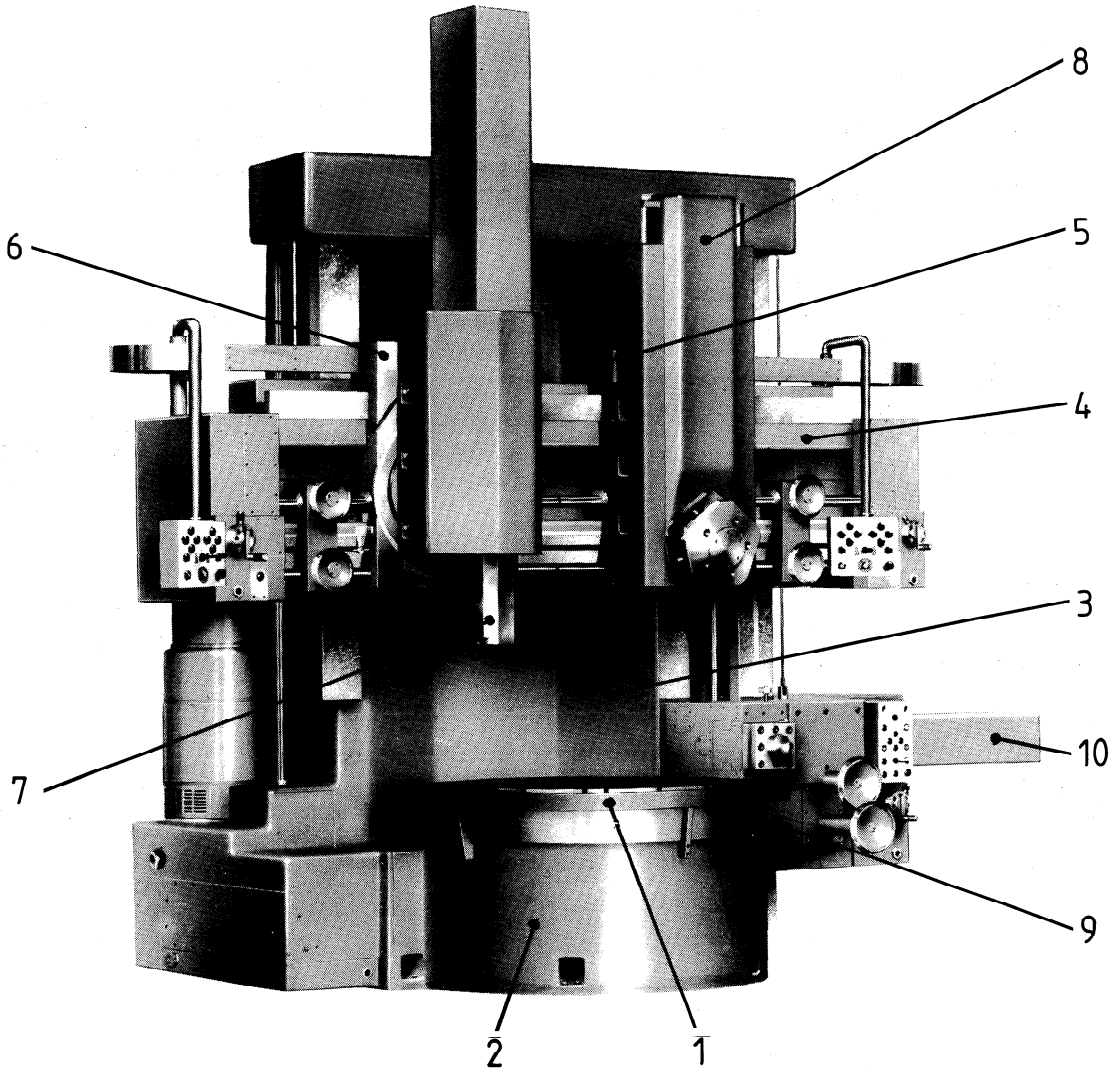

Reference	Designation					
	English	French	Russian	German	Italian	Swedish
1	Table	Plateau	планшаиба	Planscheibe	Tavola	Bord
2	Base	Socle	основание	Untersatz	Basamento	Bädd
3	Column	Montant	стойка	Ständer	Montante	Pelare
4	Rail	Traverse	поперечина	Querbalken	Traversa mobile	Tvärbalk
5	Turret railhead	Chariot de tourelle	вертикальный суппорт правый (с револьверной головкой	Revolversupport	Slitta orizzontale del carrello destro di traversa (a torretta)	Revolversupport
6	Railhead	Chariot de traverse	вертикальный суппорт левый (с ползуном)	Meisselschieber-Support	Slitta orizzontale del carrello sinistro di traversa	Mejselslidsupport
7	Railhead ram	Coulant du chariot de traverse	ползун	Meisselschieber	Slitta verticale	Mejselslid
8	Turret slide	Coulisse de tourelle	ползун правого суппорта (с ревильверной головкой)	Revolverschieber	Slitta verticale con torretta	Revolverslid
9	Side head	Chariot latéral	боковой суппорт	Seiten-Support	Slitta verticale del carrello di montante	Sidosupport
10	Side head ram	Coulant du chariot latéral	ползун бокового суппорта	Seitensupport-Schieber	Slitta orizzontale	Sidosupportslid

AVA Documents
Document Sharing Hub

Full document details: ISO 3655-1986