INTERNATIONAL STANDARD

ISO 3977

Second edition
1991-11-15

Gas turbines — Procurement

Turbines à gaz — Spécifications pour l'acquisition

Reference number
ISO 3977:1991(E)

Documents
Document Sharing Hub

Full document details: ISO 3977-1991

Foreword

ISO (the International Organization for Standardization) is a worldwide federation of national standards bodies (ISO member bodies). The work of preparing International Standards is normally carried out through ISO technical committees. Each member body interested in a subject for which a technical committee has been established has the right to be represented on that committee. International organizations, governmental and non-governmental, in liaison with ISO, also take part in the work. ISO collaborates closely with the International Electrotechnical Commission (IEC) on all matters of electrotechnical standardization.

Draft International Standards adopted by the technical committees are circulated to the member bodies for voting. Publication as an International Standard requires approval by at least 75 % of the member bodies casting a vote.

International Standard ISO 3977 was prepared by Technical Committee ISO/TC 192, *Gas turbines*.

This second edition cancels and replaces the first edition (ISO 3977:1978), which has been technically revised.

Annexes A and B form an integral part of this International Standard. Annexes C, D, E and F are for information only.

© ISO 1991
All rights reserved. No part of this publication may be reproduced or utilized in any form or by any means, electronic or mechanical, including photocopying and microfilm, without permission in writing from the publisher.

International Organization for Standardization
Case Postale 56 • CH-1211 Genève 20 • Switzerland

Printed in Switzerland

Documents
Document Sharing Hub

Full document details: ISO 3977-1991

Gas turbines — Procurement

1 Scope

1.1 This International Standard provides technical information to be used for the procurement of gas turbine systems, including combined-cycle systems, and their auxiliaries by a purchaser from a manufacturer. Because of the very widely varying operating modes for gas turbines in practice, distinct categories of operating modes are specified with which a "standard" rating can be associated. These ratings must also be made on the basis of the ISO standard ambient reference conditions.

1.2 This International Standard provides a basis for the submission of proposals to meet different environmental and safety requirements and also gives, wherever possible, criteria to establish whether these are met. It does not attempt to deal with local or national legal requirements to which the installation may be required to conform.

1.3 This International Standard defines a standard framework for dealing with questions of fuel and other matters such as the minimum information to be provided by both the purchaser and the manufacturer. It does not, however, purport to include all the necessary information for a contract and each gas turbine installation must be considered in its entirety. Attention is drawn to the need for technical consultation between the manufacturer and the purchaser to ensure compatibility of equipment being supplied, particularly where the responsibility for supply is divided.

NOTE 1 Where the term "manufacturer" is used in this International Standard, it is deemed to mean the gas turbine manufacturer or the appropriate responsible contractor.

1.4 This International Standard is applicable to open-cycle gas turbine power plants using normal combustion systems and also includes closed-cycle, semiclosed-cycle and combined-cycle gas turbine power plants. In cases of turbines using free piston gas generators or special heat sources (for example, chemical process, nuclear reactors, furnace for a super-charged boiler), this International Standard may be used as a basis but will need to be suitably modified. This International Standard excludes gas turbines used to propel aircraft, road construction and earth-moving machines, agricultural and industrial types of tractors and road vehicles.

2 Normative reference

The following standard contains provisions which, through reference in this text, constitute provisions of this International Standard. At the time of publication, the edition indicated was valid. All standards are subject to revision, and parties to agreements based on this International Standard are encouraged to investigate the possibility of applying the most recent edition of the standard indicated below. Members of IEC and ISO maintain registers of currently valid International Standards.

ISO 2314:1989, *Gas turbines — Acceptance tests.*

3 Definitions

For the purposes of this International Standard, the following definitions apply.

3.1 gas turbine: Machine which converts thermal energy into mechanical work; it consists of one or several rotating compressors, a thermal device(s) which heats the working fluid, one or several turbines, a control system and essential auxiliary equipment. Any heat exchangers (excluding waste exhaust heat recovery exchangers) in the main working fluid circuit are considered to be part of the gas turbine.

Examples of gas turbine systems are shown in figure 1.

3.2 gas turbine power plant: Gas turbine and all essential equipment necessary for the production of power in a useful form (e.g. electrical, mechanical or thermal).

AVA Documents
Document Sharing Hub

Full document details: ISO 3977-1991

3.3 open cycle: Thermodynamic cycle in which the working fluid enters the gas turbine from the atmosphere and discharges to the atmosphere.

3.4 closed cycle: Thermodynamic cycle having a recirculation working fluid independent of the atmosphere.

3.5 semiclosed cycle: Thermodynamic cycle utilizing combustion in a working fluid which is partially recirculated and partially exchanged by atmospheric air.

3.6 simple cycle: Thermodynamic cycle consisting only of successive compression, combustion and expansion.

3.7 regenerative cycle: Thermodynamic cycle employing exhaust heat recovery, consisting of successive compression, regenerative heating, combustion, expansion and regenerative cooling (heat transfer from the exhaust to the compressor discharge fluid) of the working fluid.

3.8 intercooled cycle: Thermodynamic cycle employing cooling of the working fluid between stages of successive compression.

3.9 reheat cycle: Thermodynamic cycle employing the addition of thermal energy to the working fluid between stages of expansion.

3.10 combined cycle: Thermodynamic system comprising (two or more) power cycles, each using a different working fluid. In steam and air combined cycles (the most commonly used working fluids), increased thermal efficiency is achieved because the two cycles are thermodynamically complementary, since heat is rejected from the gas turbine (Brayton cycle) at a temperature such that it can be used as, or it can supplement, the energy source in the steam system (Rankine cycle).

3.11 single-shaft gas turbine: Gas turbine in which the compressor and turbine rotors are mechanically coupled and the power output is taken either directly or through gearing.

3.12 multi-shaft gas turbine: Gas turbine combination including at least two turbines working on independent shafts. The term includes cases referred to as compound and split-shaft gas turbines.

3.13 bled gas turbine: Gas turbine which has, for external use, extraction of compressed air between compressor stages and/or at the discharge of the compressor, or extraction of hot gas at the inlet of the turbine and/or between turbine stages.

3.14 gas generator: Assembly of gas turbine components which produces heated pressurized gas to a process or to a power turbine. It consists of one or more rotating compressor(s), thermal device(s) associated with the working fluid, and one or more compressor-driving turbine(s), a control system and essential auxiliary equipment.

3.15 compressor: That component of a gas turbine which increases the pressure of the working fluid.

3.16 turbine: Term which when used alone refers to the turbine action only. It is that component of the gas turbine which produces power from expansion of the working fluid.

3.17 power turbine: Turbine having a separate shaft from which output is derived.

3.18 combustion chamber (primary or reheat): Heat source in which the fuel reacts to increase directly the temperature of the working fluid.

3.19 working fluid (gas or air) heater: Heat source in which the temperature of the working fluid is increased indirectly.

3.20 regenerator/recuperator: Different types of heat-exchanger, transferring heat from the exhaust gas to the working fluid before it enters the combustion chamber.

3.21 precooler: Heat-exchanger or evaporative cooler which reduces the temperature of the working fluid before initial compression.

3.22 intercooler: Heat-exchanger which reduces the temperature of the gas turbine working fluid between stages of compression.

3.23 overspeed trip: Control or trip element which actuates the overspeed protection system when the rotor reaches the speed for which the device is set.

3.24 control system: This includes starting control systems, governor and fuel control systems, alarm and shut-down systems, speed indicator(s), gauges, electrical power supply controls and any other controls necessary for the orderly start-up, stable operation, monitoring of operation, shut-down, warning and/or shut-down for abnormal conditions.

3.25 governing system: Control elements and devices for the control of critical parameters such as speed, temperature, pressure, power output, etc.

3.26 fuel governor valve: Valve or any other device operating as a final fuel-metering element controlling the fuel input to the gas turbine.

NOTE 2 Other means of controlling the fuel flow to the turbine are possible.

3.27 fuel stop valve: Device which, when actuated, shuts off all fuel flow to the combustion system.

AVA Documents
Document Sharing Hub

Full document details: ISO 3977-1991

3.28 dead band: Total range through which an input can be varied with no resulting measurable corrective action of the fuel flow controller. In the case of speed, dead band is expressed in percent of rated speed.

3.29 governor droop: Steady-state speed changes produced by the change of output from zero to the rated output, expressed as a percentage of the rated speed.

3.30 overtemperature detector: Primary sensing element which is directly responsive to temperature and which actuates, through suitable amplifiers or converters, the overtemperature protection system when the temperature reaches the value for which the device is set.

3.31 fuel specific energy (calorific value): Gross specific energy is the total heat released per unit mass of fuel burned, expressed in kilojoules per kilogram. The net specific energy is the gross specific energy less the heat absorbed by the vaporized water formed during combustion. It is expressed in kilojoules per kilogram.

NOTES

3 The two specific energies can be obtained for constant volume or for constant pressure, respectively, the difference being rather small.

4 The gross specific energy for constant volume is obtained using a bomb calorimeter.

5 The net specific energy value for constant pressure is used in the steady-flow combustion process (see ISO 2314). Also the specific energy may be calculated according to ISO 4261 (see annex F).

3.32 heat rate: The heat consumption per unit of net power of the gas turbine (see 3.2), expressed in kilowatts of heat per kilowatt of power, based on the net specific energy of the fuel including the sensible heat above 15 °C (see also ISO 2314:1989, 8.2.3).

NOTES

6 This may apply also to the test fuel in clause 5 and can also be expressed as the reciprocal of thermal efficiency (see 3.34).

7 The net power output of the gas turbine is derived in accordance with ISO 2314:1989, 8.1.

3.33 specific fuel consumption: Mass rate of the fuel consumed per unit of power, expressed in grams per kilowatt hour, using the net specific energy specified in 6.1.2).

3.34 thermal efficiency: Ratio of the net power output to the heat consumption based on the net specific energy of the fuel [see ISO 2314:1989, 8.2.2 and 8.3.3 e)].

3.35 reference turbine inlet temperature: Mean temperature of the working fluid immediately upstream of the first stage stator vanes (as determined in ISO 2314:1989, 8.6).

3.36 self-sustaining speed: Minimum speed at which the gas turbine operates, without using the power of the starting device, under the most unfavourable ambient conditions.

3.37 idling speed: Speed designated by the manufacturer at which the turbine will run in a stable condition and from which loading or shut-down may take place.

3.38 maximum continuous speed: Upper limit of the continuous operating speed of the gas turbine output shaft.

3.39 rated speed: Speed of the gas turbine output shaft at which the rated power is developed.

3.40 turbine trip speed: Speed at which the independent emergency overspeed device operates to shut off fuel to the gas turbine.

3.41 steam and/or water injection: Steam and/or water injected into the working fluid to increase the power output and/or to reduce the content of oxides of nitrogen (NO_x) in the exhaust.

3.42 mass to power ratio (mobile applications): Ratio of the total dry mass of the gas turbine elements, in accordance with 3.1, to the power of the gas turbine, expressed in kilograms per kilowatt, as defined in 6.3.

3.43 compressor surge: An unstable condition characterized by low-frequency fluctuations in mass flow of the working fluid in the compressor and in the connecting ducts.

AVA Documents
Document Sharing Hub

Full document details: ISO 3977-1991

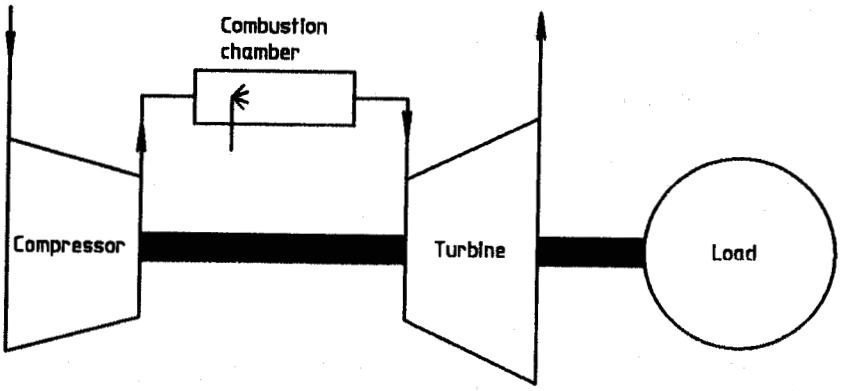

1a) Simple cycle, single-shaft gas turbine

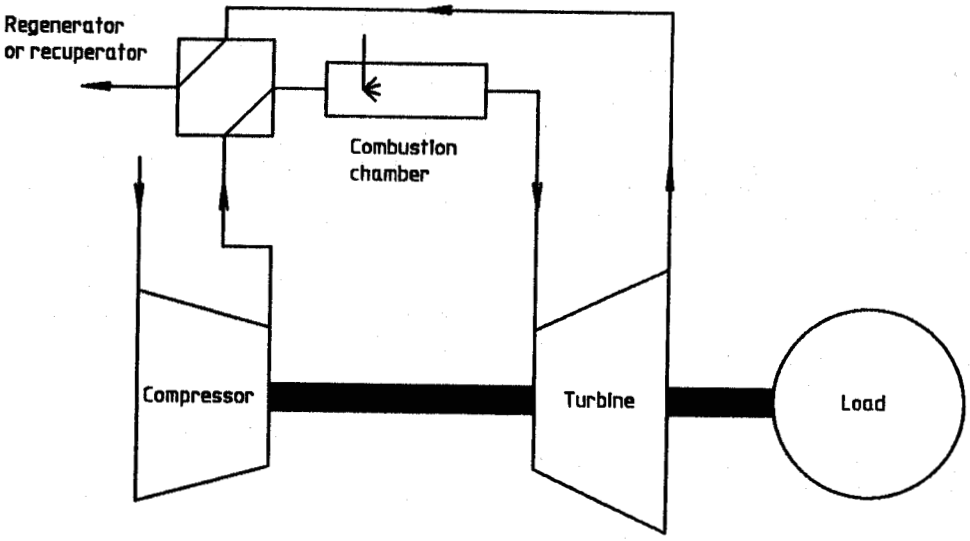

1b) Regenerative cycle, single-shaft gas turbine

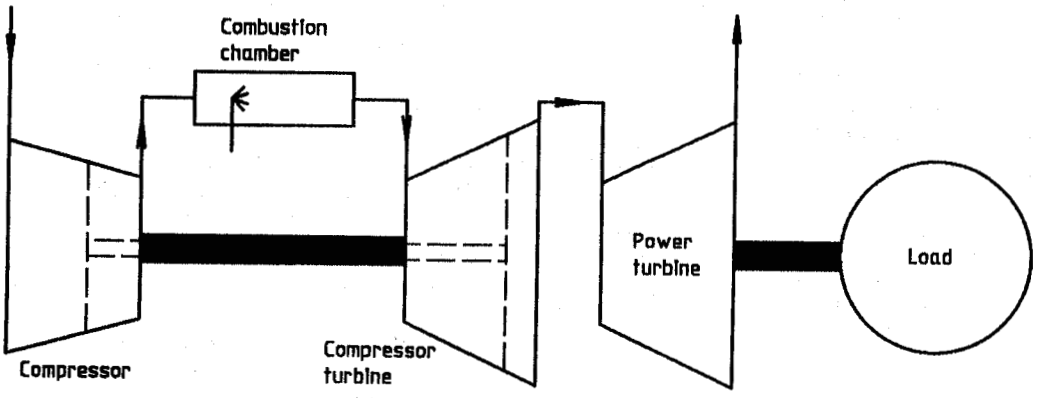

Note – Alternative twin-spool arrangement is shown in dotted lines.

1c) Simple cycle, split-shaft gas turbine, i.e. with separate power turbine

Documents
Document Sharing Hub

Full document details: ISO 3977-1991

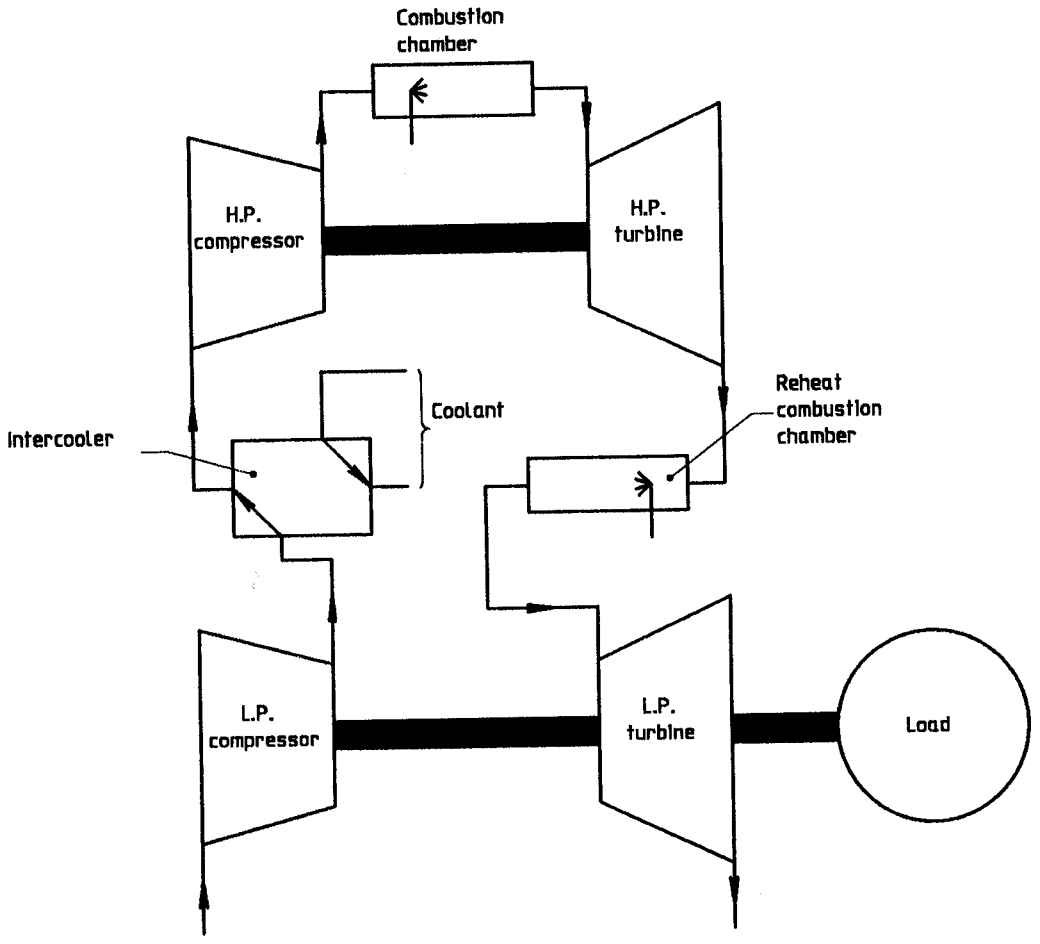

1d) Intercooled and reheat cycle (compound type), multi-shaft gas turbine with load coupled to low-pressure shaft

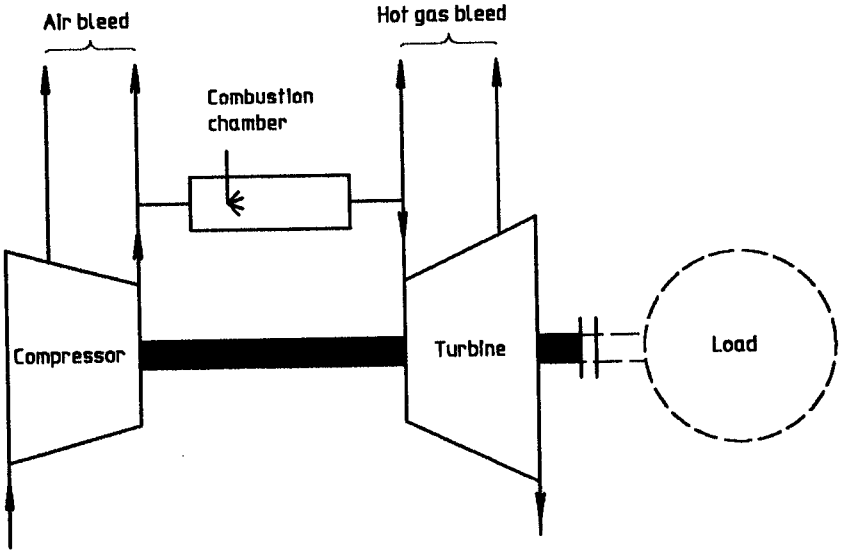

1e) Single-shaft gas turbine with air bleed and hot gas bleed

AVA Documents
Document Sharing Hub

Full document details: ISO 3977-1991

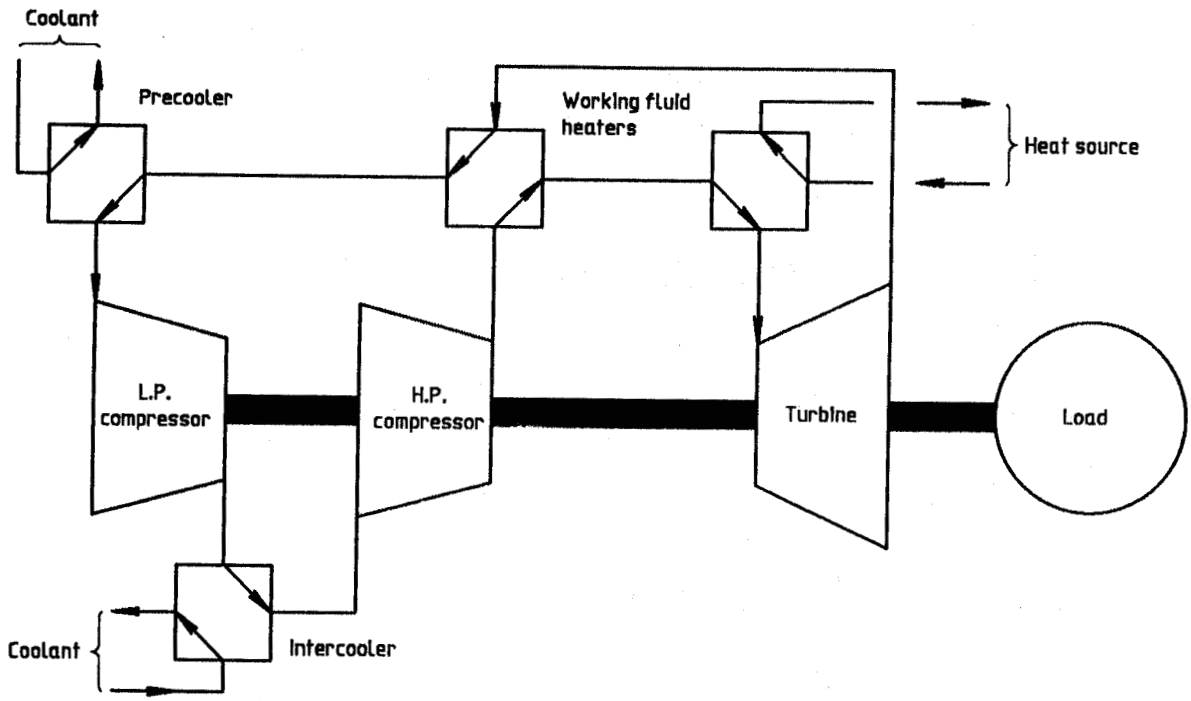

1f) Single-shaft closed-cycle gas turbine

Documents
Document Sharing Hub
Full document details: ISO 3977-1991

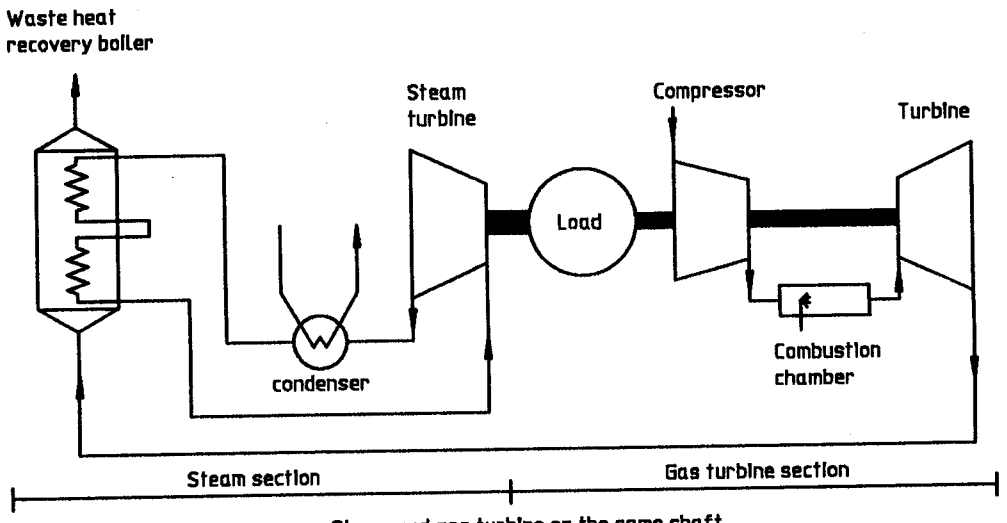

Steam and gas turbine on the same shaft

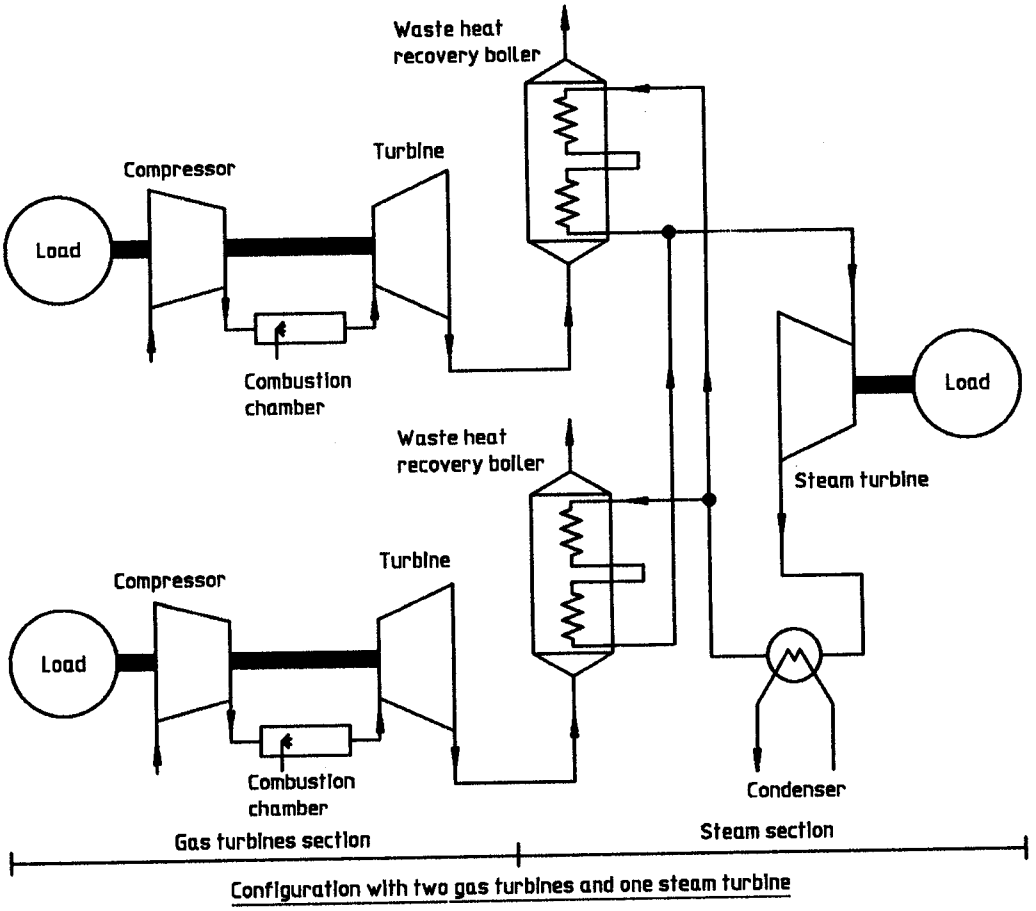

Configuration with two gas turbines and one steam turbine

1g) Combined-cycle gas turbine

AVA Documents
Document Sharing Hub

Full document details: ISO 3977-1991

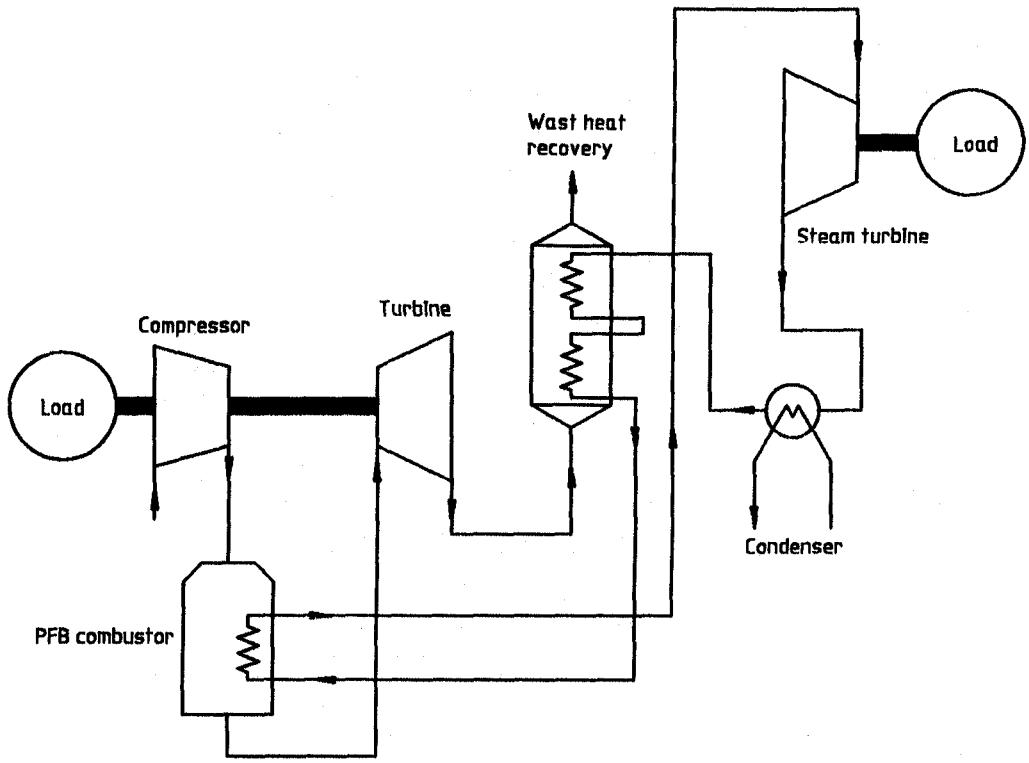

1h) Combined-cycle gas turbine with pressurized fluidized bed combustor

Figure 1 — Examples of gas turbine systems

4 Standard reference conditions

The standard reference conditions on which ISO power, efficiency, heat rate or specific fuel consumption are based are as given in 4.1 to 4.4.

4.1 Air intake conditions

For the intake air at the compressor flange (alternatively, the compressor intake flare), as described in ISO 2314:1989, 6.6.2:

— a total pressure of 101,3 kPa;

— a total temperature of 15 °C;

— a relative humidity of 60 %.

4.2 Exhaust conditions

For the exhaust at turbine exhaust flange (or regenerator outlet, if a regenerative cycle is used):

— a static pressure of 101,3 kPa.

4.3 Cooling water conditions (if applicable)

An inlet water temperature of 15 °C applies if cooling of the working fluid is used.

4.4 Working fluid heater or cooler

Where a heater or a cooler is employed and uses ambient air, the standard reference conditions of the ambient air shall be 15 °C and 101,3 kPa.

5 Test fuels

If the fuel to be used for testing the gas turbine is different from that agreed between the purchaser and the manufacturer for service operation (see 10.7), a test fuel of a mutually agreed specification shall be used.

6 Ratings

6.1 General

6.1.1 The output power of a given gas turbine at a given reference turbine inlet temperature is, in general, proportional to the absolute ambient pressure and is also greatly dependent on air intake temperature (normally outside dry bulb temperature). Likewise, the output at a given air intake temperature is dependent on the reference turbine inlet temperature. To achieve a rating it is necessary to adopt standard conditions of ambient temperature

AVA Documents
Document Sharing Hub

Full document details: ISO 3977-1991

and pressure, but gas turbine ratings will nevertheless vary considerably owing to the differing operational modes demanded of them as well as the varying criteria used in the design of the basic elements. ISO standard ratings neglect pressure drop at the inlet and exhaust but site ratings allow for these losses.

NOTE 8 Steam or water injection may be used to increase the power output and to reduce the NO_x emissions (see 3.41).

6.1.2 The performance ratings of gas turbines shall be assessed on the net specific energy of the fuel used as follows:

a) turbines intended for use on liquid fuel (DST 2, see table E.2): 42 000 kJ/kg;

b) turbines intended for use on gaseous fuel (100 % methane): 50 000 kJ/kg.

The specific energy at constant pressure of the fuel, whether liquid, gaseous or solid, is based on a pressure of 101,3 kPa and a temperature of 15 °C.

6.2 Operational modes

Unless special circumstances apply, and these must be specially agreed between the purchaser and the manufacturer, the net power rating of a gas turbine shall be specified under a combination of one of the classes in 6.2.1 together with one of the ranges of average number of starts per annum in 6.2.2.

EXAMPLE

B II refers to operation of up to 2 000 h per annum associated with any number of starts up to 500 per annum.

The manufacturer shall state the type, frequency and degree of inspection and/or maintenance required for the relevant operational mode [see 11.1 c)].

NOTE 9 It should be recognized that some gas turbine applications will operate with a combination of the classes given in 6.2.1. In such cases, the purchaser should specify the anticipated number of annual hours of operation at the specified net power ratings in each class. Operation outside these specified net power ratings/operational modes could materially affect the inspection intervals and maintenance required.

6.2.1 Classes

Class A: operation up to and including 500 h per annum at reserve peak power rating;

Class B: operation up to and including 2 000 h per annum at peak power rating;

Class C: operation up to and including 6 000 h per annum at semi-base power rating;

Class D: operation up to and including 8 760 h per annum at base power rating.

6.2.2 Ranges

Range I: over 500 starts per annum average;

Range II: up to 500 starts per annum average;

Range III: up to 100 starts per annum average;

Range IV: up to 25 starts per annum average;

Range V: continuous operation without planned shut-down for inspection and/or maintenance within a specified period.

6.3 ISO standard ratings

The manufacturer shall declare standard ratings, based on electrical power at the generator terminals or on turbine output shaft power under the standard reference conditions defined in clause 4, associated with the following operational modes:

a) ISO standard peak load rating (2 000 h and 500 starts per annum average) Class B: Range II.

b) ISO standard base load rating (8 760 h and 25 starts per annum average) Class D: Range IV.

In each case, the manufacturer shall state the type, frequency and degree of inspection and/or maintenance required.

6.4 Site ratings

The site power rating shall be specified by the manufacturer as follows.

a) Generating plant: the net electrical power at the generator terminals, with adjustment for auxiliary power as given in ISO 2314:1989, 8.1.2.

b) Mechanical drives: the net shaft power, adjusted for any auxiliaries not driven directly by the turbine (as defined in ISO 2314:1989, 8.1.1).

In either case, the site power rating shall relate to specified site conditions of the installation (such as ambient pressure and temperature, and pressure losses, steam and water injection, etc.) and operating modes under which the plant is intended to run in service.

Where the gas generator is supplied separately, its site power shall be expressed as the gas power arising from the isentropic expansion of the gas generator exhaust flow (using total pressure and temperature) to the ambient atmospheric pressure when it is operated under the specified site con-

AVA Documents
Document Sharing Hub

Full document details: ISO 3977-1991

ditions of the installation and operating modes under which the plant is intended to run in service (see ISO 2314:1989, 6.3.5).

7 Controls and protection devices

7.1 Starting

The starting control system, including any pre-start requirements such as barring, may be manual, semi-automatic or automatic, as defined in 7.1.1, 7.1.2 and 7.1.3 respectively.

7.1.1 Manual start shall require the operator to start the auxiliary equipment, initiate, hold and advance the starting sequence (crank, purge, fire) and accelerate to minimum governor setting or ready for synchronizing in the case of generating sets.

7.1.2 Semi-automatic sequence start may require manual starting of the auxiliaries and shall permit the operator to commit the turbine by a single action to the complete starting sequence up to minimum governor setting or ready for synchronizing in the case of generating sets.

7.1.3 Automatic sequence starts require only a single action (manual or otherwise) to start the required auxiliary equipment and initiate the complete starting sequence up to minimum governor setting or ready for synchronizing in the case of generating sets.

7.2 Loading

Subsequent loading of the set may be manual, semi-automatic or automatic up to a specified power level. Automatic loading may follow directly the starting sequence without any additional action of the operator.

In any mode of loading, periods of dwell at specific loads may be introduced to provide for warm-up requirements.

Where a generator requires synchronizing to a particular system prior to loading, this may also be achieved by manual or automatic means.

7.3 Shut-down

This may be achieved by manual, semi-automatic or automatic means. In each case, however, the principal sequence of operations is essentially as given in 7.3.1, 7.3.2 or 7.3.3.

7.3.1 Generator drives

a) Controlled unloading to zero output at synchronized speed.

b) Opening the circuit breaker.

c) Reduction to idling speed and period of cooling where applicable.

d) Fuel cut-off and shut-down of auxiliaries not required for barring.

e) Barring period, if necessary.

f) Shut-down of remaining auxiliaries, for example lubricating oil pumps.

g) Return to starting conditions.

7.3.2 Mechanical drives

a) Controlled unloading to minimum load conditions.

b) Cooling period where applicable.

c) Fuel cut-off followed by shut-down of auxiliaries not required for barring.

d) Barring period, if necessary.

e) Shut-down of remaining auxiliaries, for example lubricating oil pumps.

f) Return to starting conditions.

7.3.3 Emergency shut-down

a) Emergency shut-down shall be capable of manual selection and shall also occur automatically as a result of automatic operation of plant protection devices. The system shall operate directly on the fuel stop valve to cut off the turbine fuel supply.

b) Except where otherwise specified, automatic means shall be provided for isolating upon shut-down the driven equipment from the system it supplies in order to prevent motoring or reverse flow.

c) It may also be necessary to operate venting systems for the release of stored energy.

d) Normal barring and shut-down sequences, as appropriate, shall subsequently take place, but where automatic restart is included, means shall be provided to prevent automatic restart without manual reset.

AVA Documents
Document Sharing Hub

Full document details: ISO 3977-1991