International Standard

ISO 4378-1

Fifth edition
2024-11

Plain bearings — Terms, definitions, classification and symbols —

Part 1: Design, bearing materials and their properties

Paliers lisses — Termes, définitions, classification et symboles —

Partie 1: Conception, matériaux pour paliers et leurs propriétés

Reference number
ISO 4378-1:2024(en)

© ISO 2024

Documents
Document Sharing Hub

Full document details: ISO 4378-1-2024

COPYRIGHT PROTECTED DOCUMENT

© ISO 2024

All rights reserved. Unless otherwise specified, or required in the context of its implementation, no part of this publication may be reproduced or utilized otherwise in any form or by any means, electronic or mechanical, including photocopying, or posting on the internet or an intranet, without prior written permission. Permission can be requested from either ISO at the address below or ISO's member body in the country of the requester.

ISO copyright office
CP 401 • Ch. de Blandonnet 8
CH-1214 Vernier, Geneva
Phone: +41 22 749 01 11
Email: copyright@iso.org
Website: www.iso.org

Published in Switzerland

Documents
Document Sharing Hub
Full document details: ISO 4378-1-2024

Contents

Page

Foreword ..... **iv**
Introduction ..... **v**
1 Scope **1**
2 Normative references **1**
3 Terms and definitions **1**
3.1 General terms 1
3.2 Terms related to types of plain bearings and classification 1
3.2.1 Classification according to the type of load 1
3.2.2 Classification according to the direction of the acting load 2
3.2.3 Classification according to the type of lubrication 3
3.2.4 Classification according to the design 9
3.3 Terms related to structural elements of plain bearing assembly 16
3.4 Terms related to structural elements of plain bearing 24
3.5 Terms related to dimensional characteristics of plain bearing 31
3.6 Terms related to materials and their properties 41
Bibliography **44**
Index **45**

© ISO 2024 – All rights reserved

Documents
Document Sharing Hub
Full document details: ISO 4378-1-2024

Foreword

ISO (the International Organization for Standardization) is a worldwide federation of national standards bodies (ISO member bodies). The work of preparing International Standards is normally carried out through ISO technical committees. Each member body interested in a subject for which a technical committee has been established has the right to be represented on that committee. International organizations, governmental and non-governmental, in liaison with ISO, also take part in the work. ISO collaborates closely with the International Electrotechnical Commission (IEC) on all matters of electrotechnical standardization.

The procedures used to develop this document and those intended for its further maintenance are described in the ISO/IEC Directives, Part 1. In particular, the different approval criteria needed for the different types of ISO document should be noted. This document was drafted in accordance with the editorial rules of the ISO/IEC Directives, Part 2 (see www.iso.org/directives).

ISO draws attention to the possibility that the implementation of this document may involve the use of (a) patent(s). ISO takes no position concerning the evidence, validity or applicability of any claimed patent rights in respect thereof. As of the date of publication of this document, ISO had not received notice of (a) patent(s) which may be required to implement this document. However, implementers are cautioned that this may not represent the latest information, which may be obtained from the patent database available at www.iso.org/patents. ISO shall not be held responsible for identifying any or all such patent rights.

Any trade name used in this document is information given for the convenience of users and does not constitute an endorsement.

For an explanation of the voluntary nature of standards, the meaning of ISO specific terms and expressions related to conformity assessment, as well as information about ISO's adherence to the World Trade Organization (WTO) principles in the Technical Barriers to Trade (TBT), see www.iso.org/iso/foreword.html.

This document was prepared by Technical Committee TC 123, *Plain bearings*, Subcommittee SC 6, *Terms and common items*.

This fifth edition cancels and replaces the fourth edition (ISO 4378-1:2017), which has been technically revised.

The main changes are as follows:

— addition of several new terms, key references and an alphabetical index.

A list of all parts in the ISO 4378 series can be found on the ISO website.

Any feedback or questions on this document should be directed to the user's national standards body. A complete listing of these bodies can be found at www.iso.org/members.html.

© ISO 2024 – All rights reserved

Documents
Document Sharing Hub
Full document details: ISO 4378-1-2024

Introduction

As there is a large number of multiple designations in the domain of plain bearings, there is a considerable risk of error in the interpretation of standards and technical literature.

This document is an attempt to establish a uniform basic system of designations of design, bearing materials and their properties.

© ISO 2024 – All rights reserved

Documents
Document Sharing Hub
Full document details: ISO 4378-1-2024

Documents
Document Sharing Hub

Full document details: ISO 4378-1-2024

Plain bearings — Terms, definitions, classification and symbols —

Part 1:
Design, bearing materials and their properties

1 Scope

This document specifies the most commonly used terms relating to design, bearing materials and their properties of plain bearings with their definitions and classification.

For some terms and word combinations, their short forms are given, which can be used where they are unambiguous.

2 Normative references

There are no normative references in this document.

3 Terms and definitions

ISO and IEC maintain terminological databases for use in standardization at the following addresses:

— ISO Online browsing platform: available at https://www.iso.org/obp

— IEC Electropedia: available at https://www.electropedia.org/

3.1 General terms

3.1.1
bearing
mechanical component by means of which a part in relative motion is supported and/or guided with respect to other parts of a mechanism

3.1.2
plain bearing
sliding bearing
bearing (3.1.1) in which the type of relative motion is sliding

3.1.3
plain bearing unit
mechanical component of a tribological system including a *plain bearing* (3.1.2), its supporting part (e.g. a housing), a shaft and a lubricating system

3.2 Terms related to types of plain bearings and classification

3.2.1 Classification according to the type of load

3.2.1.1
statically loaded plain bearing
plain bearing (3.1.2) operating under a load constant in magnitude and direction

© ISO 2024 – All rights reserved

Documents
Document Sharing Hub
Full document details: ISO 4378-1-2024

3.2.1.2
dynamically loaded plain bearing
plain bearing (3.1.2) operating under a load changing in magnitude and/or direction

3.2.2 Classification according to the direction of the acting load

3.2.2.1
plain journal bearing
journal bearing
plain bearing (3.1.2) in which the load acts radially to the axis of the rotating shaft

Note 1 to entry: See Figures 1 and 3.

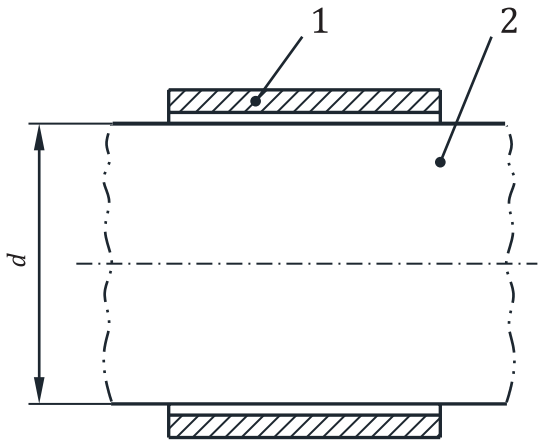

Key

1 plain journal bearing

2 *journal* (3.3.8)

d *journal diameter* (3.5.32), *shaft diameter* (3.5.33)

Figure 1 — Plain journal bearing

3.2.2.2
plain thrust bearing
thrust bearing
plain bearing (3.1.2) in which the load acts along the axis of the rotating shaft

Note 1 to entry: See Figure 2.

© ISO 2024 – All rights reserved

Documents
Document Sharing Hub
Full document details: ISO 4378-1-2024

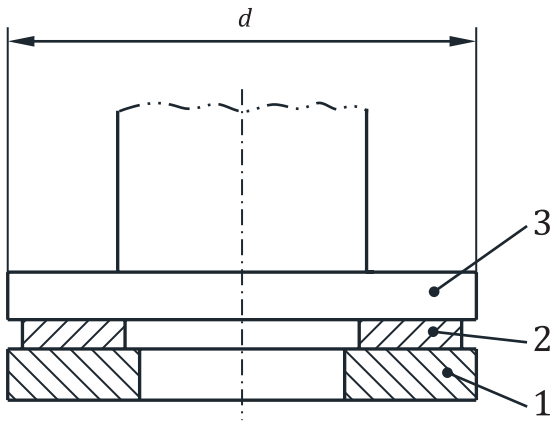

Key

1 support ring

2 *thrust pad* (3.3.7.2)

3 *thrust collar* (3.3.9)

d *collar diameter* (3.5.34)

Figure 2 — Plain thrust bearing

3.2.2.3
journal thrust bearing
flanged bearing
plain bearing (3.1.2) capable of supporting a load in both the axial and radial directions

3.2.3 Classification according to the type of lubrication

3.2.3.1
hydrodynamic bearing
plain bearing (3.1.2) operating under conditions of hydrodynamic lubrication

Note 1 to entry: See Figure 3.

© ISO 2024 – All rights reserved

Documents
Document Sharing Hub
Full document details: ISO 4378-1-2024

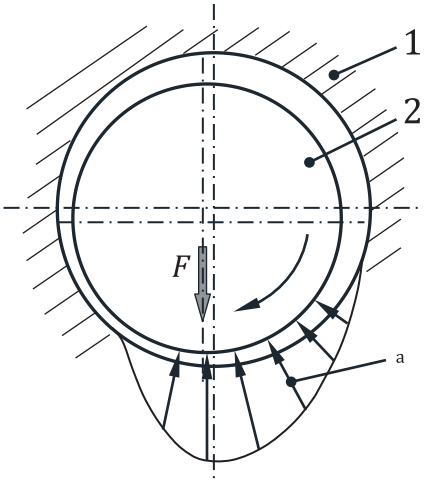

Key

1 *plain journal bearing* (3.2.2.1)

2 *journal* (3.3.8)

F load

a Fluid film pressure distribution.

Figure 3 — Hydrodynamic bearing

3.2.3.2
hydrostatic bearing
externally pressurized bearing
plain bearing (3.1.2) operating under conditions of hydrostatic lubrication

Note 1 to entry: See Figure 4.

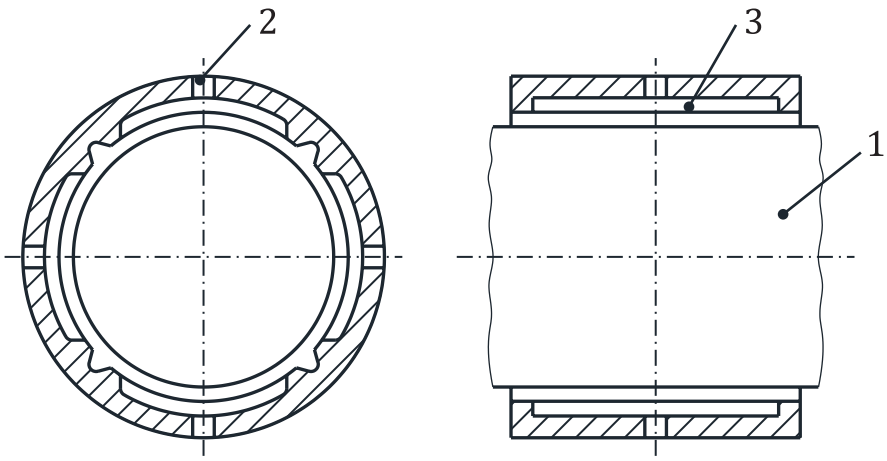

Key

1 *journal* (3.3.8)

2 *oil hole, lubrication hole* (3.4.1)

3 *oil pocket, lubrication indentation* (3.4.3)

Figure 4 — Hydrostatic bearing

© ISO 2024 – All rights reserved

Documents
Document Sharing Hub
Full document details: ISO 4378-1-2024

3.2.3.3
hydrodynamic gas bearing
hydrodynamic air bearing
aerodynamic bearing
plain bearing (3.1.2) operating under conditions of hydrodynamic gas/air lubrication

3.2.3.4
hydrostatic gas bearing
hydrostatic air bearing
aerostatic bearing
plain bearing (3.1.2) operating under conditions of hydrostatic gas/air lubrication

3.2.3.5
squeeze film bearing
plain bearing (3.1.2) in which complete separation of sliding surfaces is caused by the pressure developed in the lubricant film as a result of their approach in the direction normal to the surface

Note 1 to entry: See Figure 5.

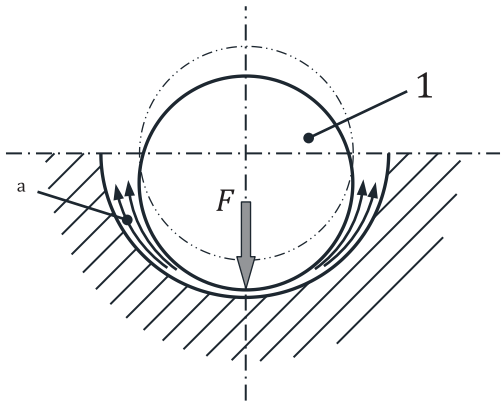

Key

1 *journal* (3.3.8)

F load

a Squeezed fluid flow.

Figure 5 — Squeeze film bearing

3.2.3.6
hybrid bearing
plain bearing (3.1.2) operating under conditions of both hydrostatic and hydrodynamic lubrication

3.2.3.7
solid-film lubricated bearing
plain bearing (3.1.2) operating with a solid lubricant

Note 1 to entry: See Figure 6.

© ISO 2024 – All rights reserved

Documents
Document Sharing Hub
Full document details: ISO 4378-1-2024

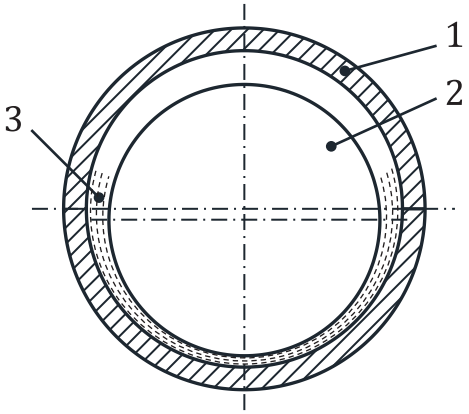

Key

1 *plain bearing* (3.1.2)

2 *journal* (3.3.8)

3 solid lubricant

Figure 6 — Solid film lubricated bearing

3.2.3.8
unlubricated bearing
plain bearing (3.1.2) operating without a lubricant

3.2.3.9
self-lubricating bearing
plain bearing (3.1.2) lubricated by the *bearing material* (3.6.1), by the material components or by solid lubricant overlays

3.2.3.10
porous self-lubricating bearing
sintered bearing
oil-impregnated sintered bearing
plain bearing (3.1.2), the sliding part of which consists of material having communicating pores filled with lubricant

Note 1 to entry: See Figure 7.

© ISO 2024 – All rights reserved

Documents
Document Sharing Hub
Full document details: ISO 4378-1-2024

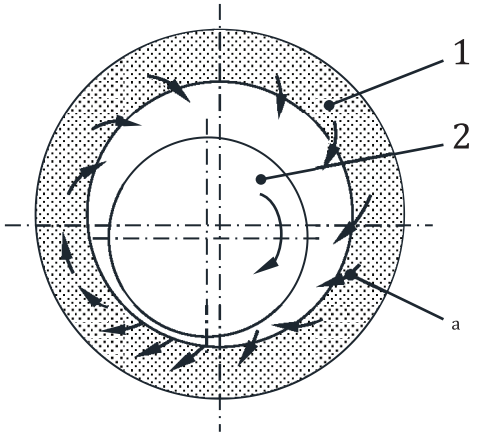

Key

1 porous bearing

2 *journal* (3.3.8)

a Fluid flow.

Figure 7 — Porous self-lubricating bearing

3.2.3.11
self-contained plain bearing assembly
bearing assembly with a lubricant reservoir and means of circulating the lubricant to the bearing surface

Note 1 to entry: See *plain bearing assembly* (3.2.4.9).

3.2.3.12
foil bearing
hydrodynamic bearing (3.2.3.1) consisting of a thin *solid material* (3.6.2) with low bending stiffness, which supports a load while allowing deflection of the thin solid material

Note 1 to entry: See Figure 8.

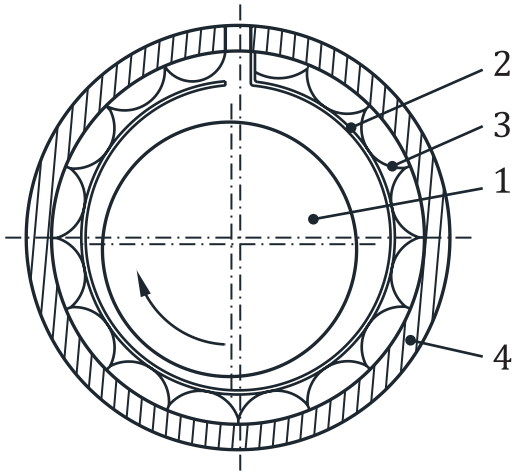

Key

1 *journal* (3.3.8)

2 top foil

3 bump foil

4 *housing* (3.3.11)

Figure 8 — Foil bearing

© ISO 2024 – All rights reserved

Documents
Document Sharing Hub
Full document details: ISO 4378-1-2024

3.2.3.13
helical groove bearing
spiral groove bearing
hydrodynamic bearing (3.2.3.1) system with many shallow helical grooves on the surface of the bearing or the shaft

Note 1 to entry: See Figure 9.

Note 2 to entry: The term "spiral groove bearing" is commonly used, although the design in Subfigures a) and b) make use of helical grooves. In case of Subfigure c) the grooves are spiral shaped.

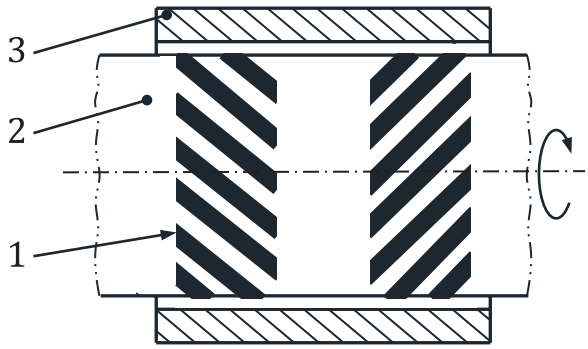

a) Spiral groove on the shaft surface: A

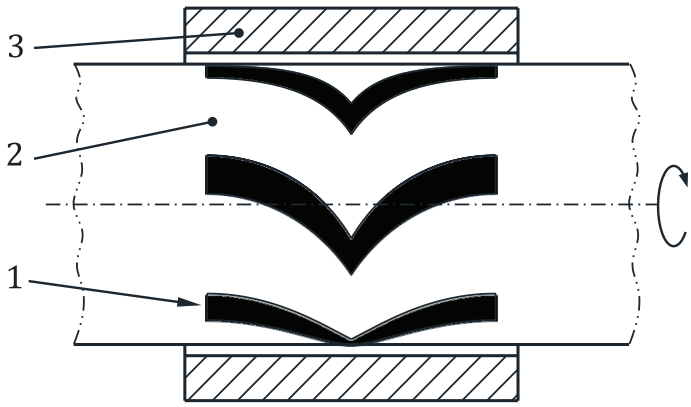

b) Spiral groove on the shaft surface: B

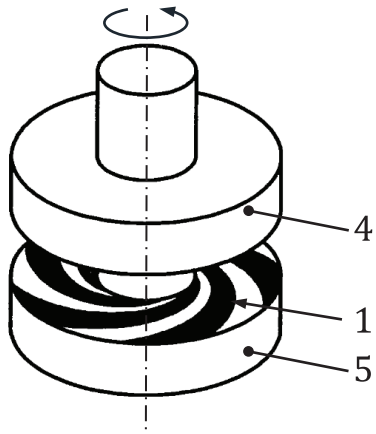

c) Spiral groove on the thrust bearing surface

Key

1 grooves
2 *journal* (3.3.8)
3 *plain journal bearing* (3.2.2.1)
4 *thrust collar* (3.3.9)
5 *plain thrust bearing* (3.2.2.2)

Figure 9 — Spiral groove bearing

© ISO 2024 – All rights reserved

Documents
Document Sharing Hub
Full document details: ISO 4378-1-2024

3.2.4 Classification according to the design

3.2.4.1
circular cylindrical bearing
plain journal bearing (3.2.2.1), every cross-section of the inside surface of which is a circle of the same diameter

Note 1 to entry: See Figure 10.

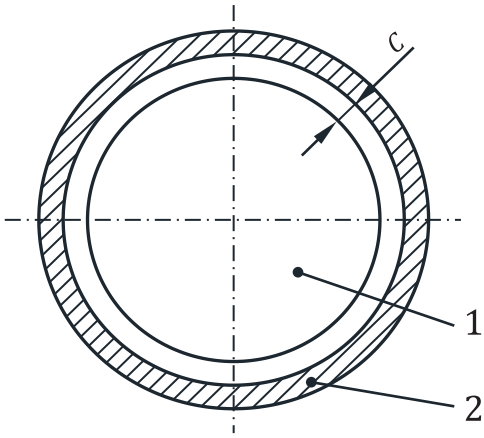

Key

1 *journal* (3.3.8)

2 *plain journal bearing* (3.2.2.1)

C *radial clearance of a circular cylindrical bearing* (3.5.5)

Figure 10 — Circular cylindrical bearing

3.2.4.2
profile bore bearing
multi-lobed bearing
plain journal bearing (3.2.2.1) in which no cross-section of the inside surface is a circle

Note 1 to entry: See Figure 11.

Note 2 to entry: the bearing usually has more than one cylindrical surface so arranged that two or more lubricant wedges develop around the bearing circumference.

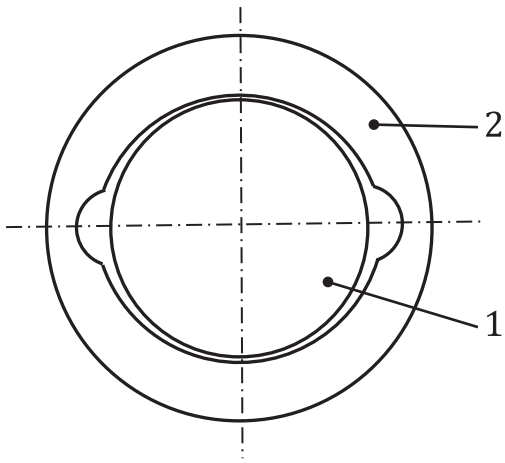

a) Two lobe bearing

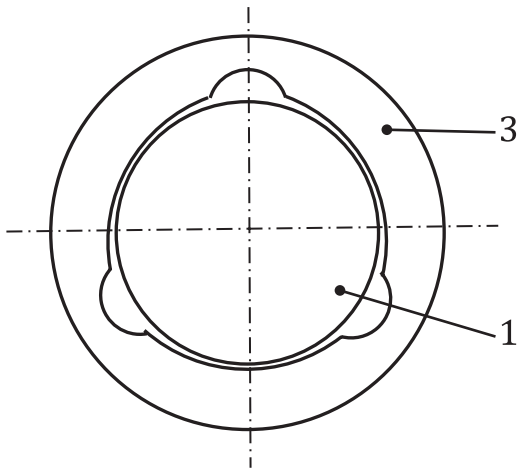

b) Three lobe bearing

© ISO 2024 – All rights reserved

Documents
Document Sharing Hub
Full document details: ISO 4378-1-2024

Key

1 *journal* (3.3.8)

2 two lobe bearing

3 three lobe bearing

Figure 11 — Multi lobed bearing

3.2.4.3
pad thrust bearing
plain thrust bearing (3.2.2.2), the sliding surface of which consists of fixed *pads* (3.3.7)

Note 1 to entry: See Figure 12

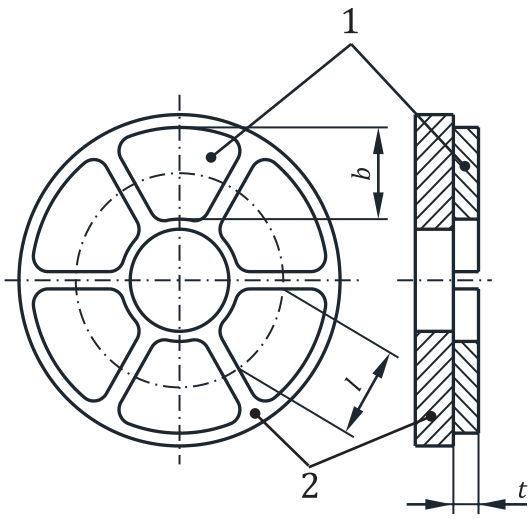

Key

1 *pad* (3.3.7), *thrust pad* (3.3.7.2)

2 support ring

l *pad length of pad thrust bearing* (3.5.11)

b *pad width* (3.5.13)

t *pad thickness* (3.5.14)

Figure 12 — Pad thrust bearing

3.2.4.4
taper-land thrust bearing
plain thrust bearing (3.2.2.2) in which one side of the sliding surfaces is tapered

Note 1 to entry: See Figure 13.

© ISO 2024 – All rights reserved

Documents
Document Sharing Hub
Full document details: ISO 4378-1-2024

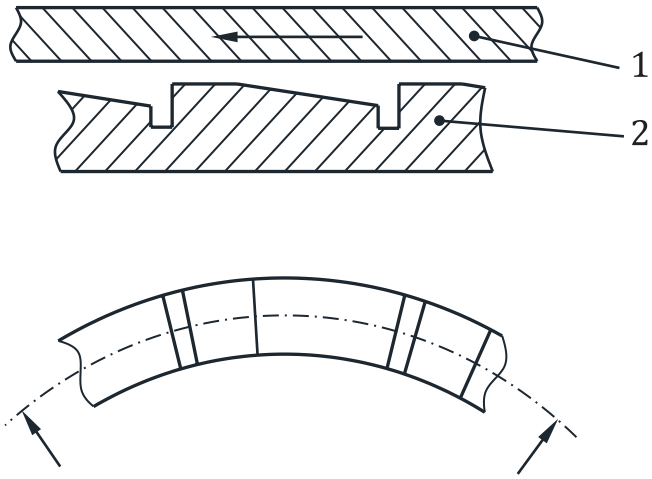

Key

1 *thrust collar* (3.3.9)

2 taper-land thrust bearing

NOTE The upper figure shows a developed view of the cross section along the dotted line in the lower figure.

Figure 13 — Taper-land thrust bearing

3.2.4.5
step thrust bearing
plain thrust bearing (3.2.2.2) with a step on the surface that is higher in the direction of shaft rotation

Note 1 to entry: See Figure 14.

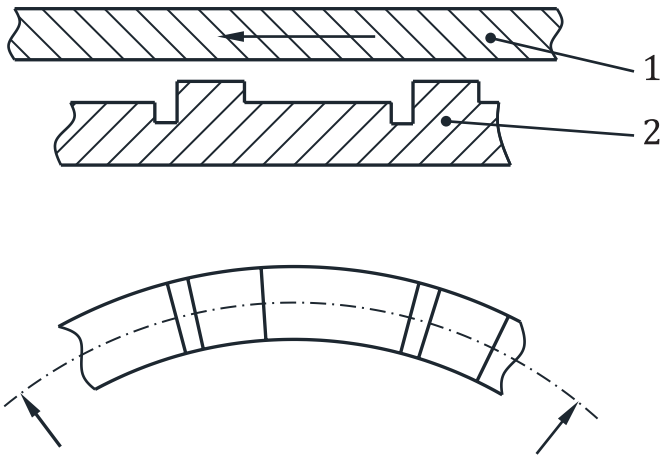

Key

1 *thrust collar* (3.3.9)

2 step thrust bearing

NOTE The upper figure shows a developed view of the cross section along the dotted line in the lower figure.

Figure 14 — Step thrust bearing

© ISO 2024 – All rights reserved

Documents
Document Sharing Hub
Full document details: ISO 4378-1-2024