INTERNATIONAL STANDARD

ISO 6099

Fifth edition
2018-09

Fluid power systems and components — Cylinders — Identification code for mounting dimensions and mounting types

Transmissions hydrauliques et pneumatiques — Vérins — Code d'identification des dimensions de montage et des modes de fixation

Reference number
ISO 6099:2018(E)

Documents
Document Sharing Hub

© ISO 2018

Full document details: ISO 6099-2018

COPYRIGHT PROTECTED DOCUMENT

© ISO 2018

All rights reserved. Unless otherwise specified, or required in the context of its implementation, no part of this publication may be reproduced or utilized otherwise in any form or by any means, electronic or mechanical, including photocopying, or posting on the internet or an intranet, without prior written permission. Permission can be requested from either ISO at the address below or ISO's member body in the country of the requester.

ISO copyright office
CP 401 • Ch. de Blandonnet 8
CH-1214 Vernier, Geneva
Phone: +41 22 749 01 11
Fax: +41 22 749 09 47
Email: copyright@iso.org
Website: www.iso.org

Published in Switzerland

© ISO 2018 – All rights reserved

Documents
Document Sharing Hub

Full document details: ISO 6099-2018

Contents

Page

Foreword ... **iv**

Introduction ... **v**

1 Scope ... **1**

2 Normative references ... **1**

3 Terms and definitions ... **1**

4 Identification code for rod end types ... **1**
- 4.1 Reference points and letter codes ... 1
  - 4.1.1 General ... 1
  - 4.1.2 Plain rod end ... 2
  - 4.1.3 Pin rod end ... 2
  - 4.1.4 Female threaded rod end ... 2
  - 4.1.5 Male threaded rod end ... 2
  - 4.1.6 Wrench flat piston rod end or hook wrench holes ... 3
  - 4.1.7 Grooved piston rod end — Alternative reference points ... 4
- 4.2 Identification code ... 5

5 Letter code for identifying cylinder mounting, envelope and accessory dimensions ... **6**
- 5.1 General ... 6
- 5.2 Letter *U* ... 6
- 5.3 Letter *Z* ... 6
- 5.4 Letters *W*, *X*, *Y*, *Z* ... 6
- 5.5 Signs ... 6
- 5.6 Dimensioning ... 6

6 Identification code for mounting types ... **8**
- 6.1 General ... 8
- 6.2 Mounting types ... 8
- 6.3 Letter codes of mounting and envelope dimensions according to cylinder mounting type ... 10

7 Identification code for accessory types ... **35**
- 7.1 General ... 35
- 7.2 Accessory types ... 35
- 7.3 Letter codes of accessories according to accessory type ... 36

8 Designation of the position of the ports in round and square types ... **44**

9 Identification statement (Reference to this document) ... **45**

© ISO 2018 – All rights reserved

Documents
Document Sharing Hub

Full document details: ISO 6099-2018

Foreword

ISO (the International Organization for Standardization) is a worldwide federation of national standards bodies (ISO member bodies). The work of preparing International Standards is normally carried out through ISO technical committees. Each member body interested in a subject for which a technical committee has been established has the right to be represented on that committee. International organizations, governmental and non-governmental, in liaison with ISO, also take part in the work. ISO collaborates closely with the International Electrotechnical Commission (IEC) on all matters of electrotechnical standardization.

The procedures used to develop this document and those intended for its further maintenance are described in the ISO/IEC Directives, Part 1. In particular, the different approval criteria needed for the different types of ISO documents should be noted. This document was drafted in accordance with the editorial rules of the ISO/IEC Directives, Part 2 (see www.iso.org/directives).

Attention is drawn to the possibility that some of the elements of this document may be the subject of patent rights. ISO shall not be held responsible for identifying any or all such patent rights. Details of any patent rights identified during the development of the document will be in the Introduction and/or on the ISO list of patent declarations received (see www.iso.org/patents).

Any trade name used in this document is information given for the convenience of users and does not constitute an endorsement.

For an explanation of the voluntary nature of standards, the meaning of ISO specific terms and expressions related to conformity assessment, as well as information about ISO's adherence to the World Trade Organization (WTO) principles in the Technical Barriers to Trade (TBT) see www.iso.org/iso/foreword.html.

This document was prepared by Technical Committee ISO/TC 131, *Fluid power systems*, Subcommittee SC 3, *Cylinders*.

This fifth edition cancels and replaces the fourth edition (ISO 6099:2009), which has been technically revised.

The main changes compared to the previous edition are as follows:

— Amendments have been made to figures.

Any feedback or questions on this document should be directed to the user's national standards body. A complete listing of these bodies can be found at www.iso.org/members.html.

© ISO 2018 – All rights reserved
Documents
Document Sharing Hub
Full document details: ISO 6099-2018

Introduction

In fluid power systems, power is transmitted and controlled through a fluid (liquid or gas) under pressure within an enclosed circuit. Systems and their components are generally designed and marketed for a specific fluid pressure.

One such component is the fluid power cylinder. This is a device which converts power into linear mechanical force and motion. It consists of a movable element, i.e. a piston and piston rod, operating within a cylindrical bore.

Although this document provides a code and means of dimensioning for cylinder mounting, it is not intended that all dimensions be standardized. The code specified in this document is not to be considered as complete for the development of future interchangeability standards. It establishes uniform descriptions for dimensions and achieves conformity of language.

The code can be used for analogous dimensions when this involves neither confusion nor misunderstanding.

© ISO 2018 – All rights reserved

Documents
Document Sharing Hub
Full document details: ISO 6099-2018

Documents
Document Sharing Hub

Full document details: ISO 6099-2018

Fluid power systems and components — Cylinders — Identification code for mounting dimensions and mounting types

1 Scope

This document establishes a convention for the identification of mounting dimensions and types used in the mounting of fluid power cylinders. It specifies a code for identifying cylinder mounting, envelope, accessory and connector dimensions, and for cylinder mounting and accessory types.

This document does not represent a standard list of all fluid power cylinder mounting and accessory types.

2 Normative references

The following documents are referred to in the text in such a way that some or all of their content constitutes requirements of this document. For dated references, only the edition cited applies. For undated references, the latest edition of the referenced document (including any amendments) applies.

ISO 5598, *Fluid power systems and components — Vocabulary*

3 Terms and definitions

For the purposes of this document, the terms and definitions given in ISO 5598 apply.

ISO and IEC maintain terminological databases for use in standardization at the following addresses:

— IEC Electropedia: available at http://www.electropedia.org

— ISO Online browsing platform: available at http://www.iso.org/obp

4 Identification code for rod end types

4.1 Reference points and letter codes

4.1.1 General

4.1.1.1 First point of reference

Axial dimensions are determined from a reference point that is the same for all cylinders, whatever their mounting method. This theoretical reference point (TRP) is the point of force transfer from the piston rod to the movable element. This point of reference (TRP) is named the first TRP.

4.1.1.2 Second point of reference

For double rod cylinders, the second TRP is defined by the letter code ZM directly attached to the first point of TRP (see Figure 8). This second TRP is used for accessories on the second rod side.

© ISO 2018 – All rights reserved

Documents
Document Sharing Hub
Full document details: ISO 6099-2018

4.1.2 Plain rod end

For a plain rod end the reference point is located on the rod centreline at the end of the piston rod. See Figure 1.

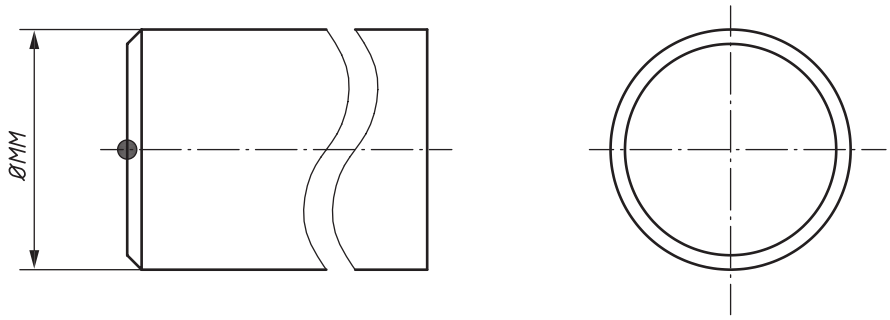

Figure 1 — RPE$_x$ — Plain rod end

4.1.3 Pin rod end

For a pin rod end, the reference point is located at the intersection of the pin and piston rod centrelines. See Figure 2.

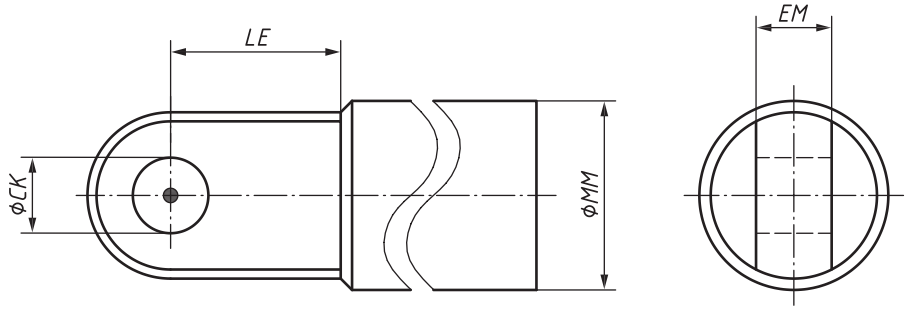

Figure 2 — RPR$_x$ — Pin rod end

4.1.4 Female threaded rod end

For a female threaded rod end, the reference point is located on the rod centreline at the end of the piston rod. See Figure 3.

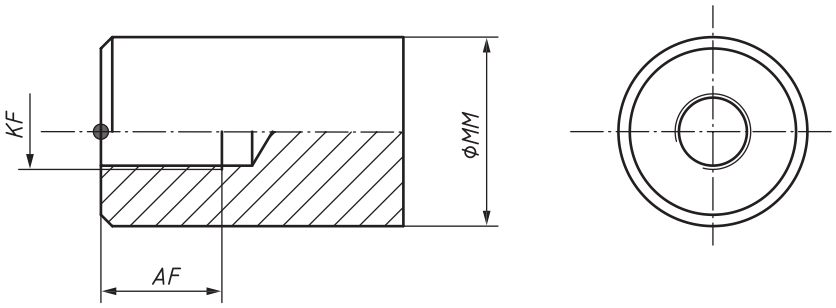

Figure 3 — RTF$_x$ — Female threaded rod end

4.1.5 Male threaded rod end

For a male threaded rod end, the reference point is located on the rod centreline, at the shoulder level. See Figure 4.

© ISO 2018 – All rights reserved
Documents
Document Sharing Hub
Full document details: ISO 6099-2018

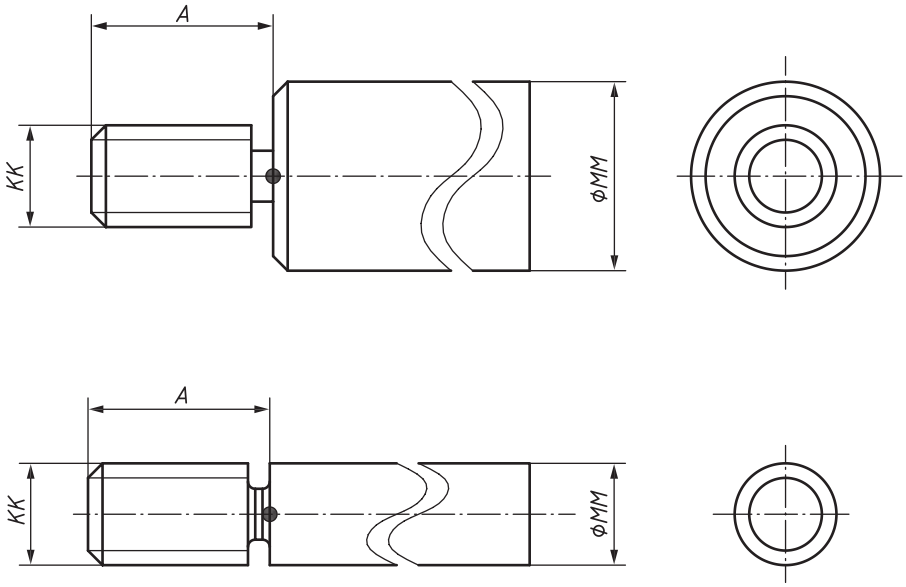

Figure 4 — RTM$_X$ — Male threaded rod end

4.1.6 Wrench flat piston rod end or hook wrench holes

For a wrench flat piston rod end or hook wrench holes piston rod end, the reference point is located on the rod centreline at the shoulder level. See Figure 5.

© ISO 2018 – All rights reserved

Documents
Document Sharing Hub
Full document details: ISO 6099-2018

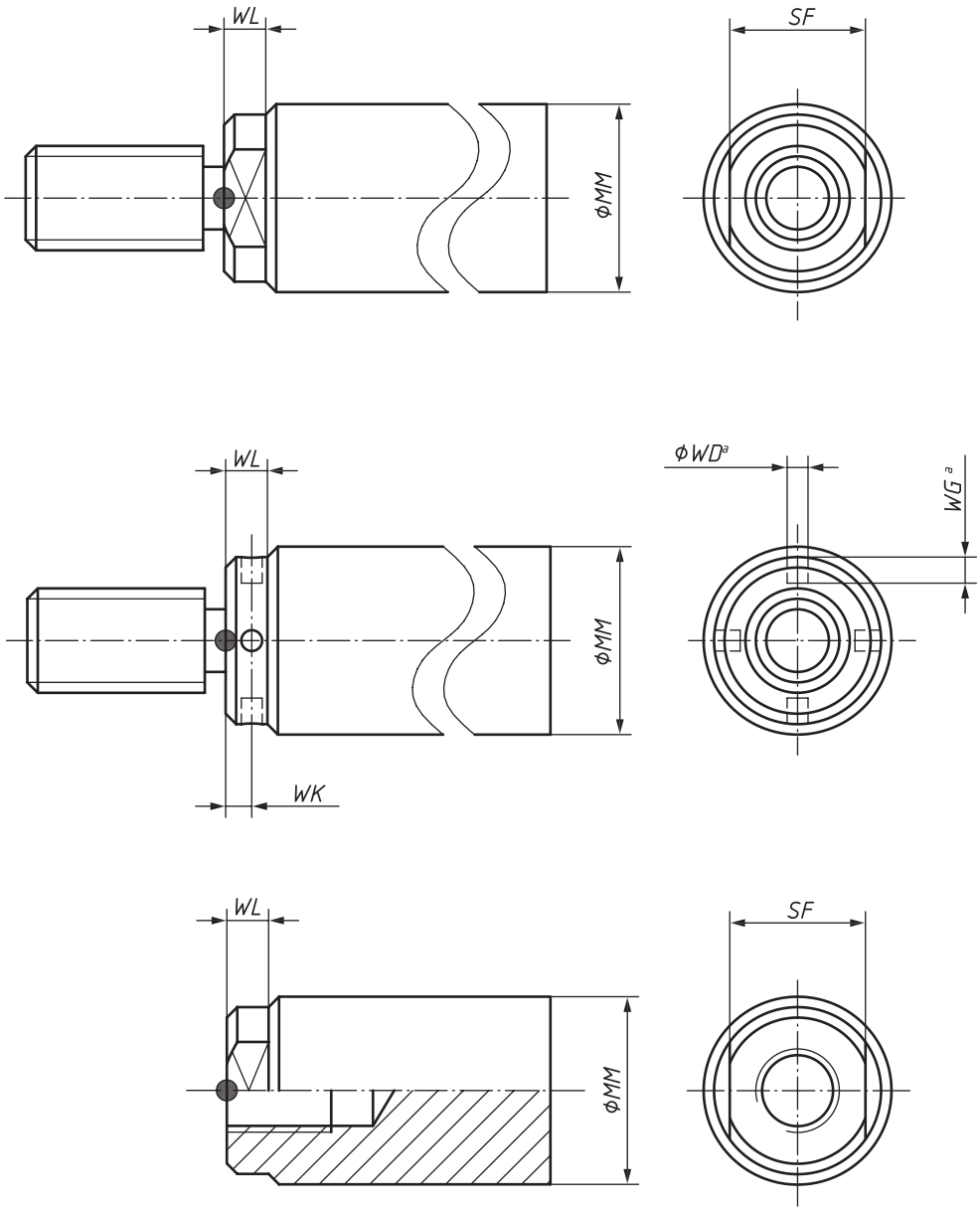

a Optional.

Figure 5 — Wrench flat piston rod end or hook wrench holes

4.1.7 Grooved piston rod end — Alternative reference points

For a grooved piston rod end, the reference point is either located on the rod centreline at the end of the piston rod (see Figure 6) or on the rod centreline at the shoulder level (see Figure 7).

© ISO 2018 – All rights reserved
Documents
Document Sharing Hub
Full document details: ISO 6099-2018

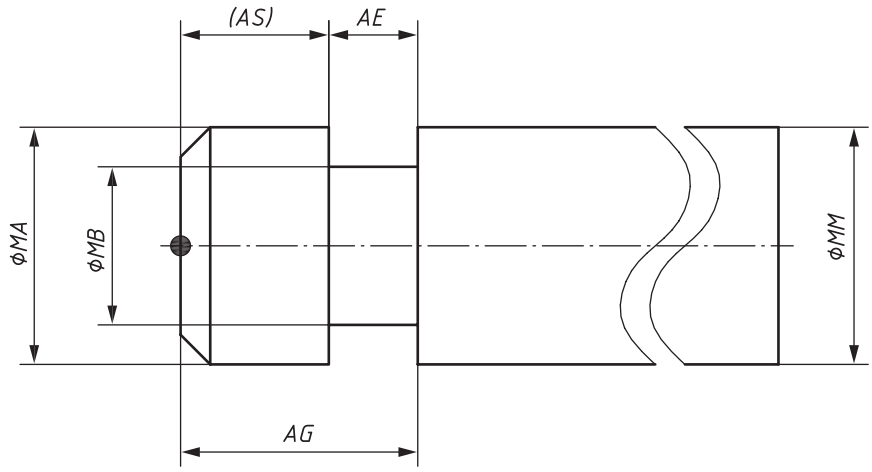

Figure 6 — RFE$_x$ — Grooved piston rod end with TRP at the end of the piston rod

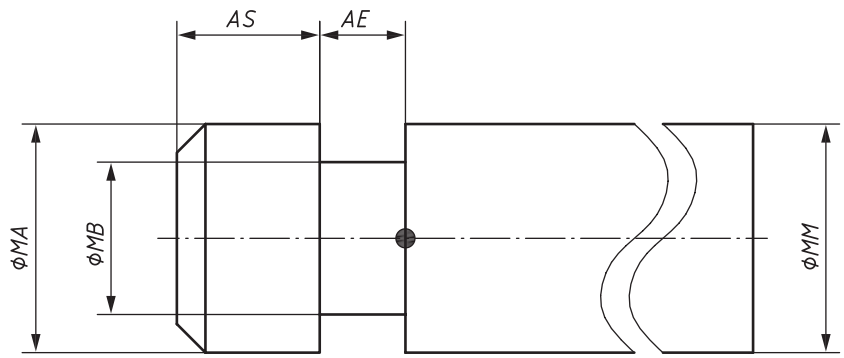

Figure 7 — RFS$_x$ — Grooved piston rod end with TRP at the shoulder level

4.2 Identification code

Table 1 shows the identification code for the rod end types.

Table 1 — Identification code

Identification code	Description
RTM$_x$	Male threaded rod end
RTF$_x$	Female threaded rod end
RPE$_x$	Plain rod end
RPR$_x$	Pin rod end
RFE$_x$	Grooved piston rod end with TRP at the end of the piston rod
RFS$_x$	Grooved piston rod end with TRP at the shoulder level
x	Is designated for the wrench flats or hook wrench: 0 = none 1 = wrench flats 2 = hook wrench

© ISO 2018 – All rights reserved

Documents
Document Sharing Hub
Full document details: ISO 6099-2018

5 Letter code for identifying cylinder mounting, envelope and accessory dimensions

5.1 General

The code for identifying cylinder mounting, envelope and accessory dimensions is composed of one or two letters and, in some cases, the signs: '+', '++' or '+/'.

For the meaning of these letters and signs, see 5.2 to 5.5.

5.2 Letter *U*

Any group of two letters beginning with *U* identifies an 'end view envelope' dimension.

5.3 Letter *Z*

Any group of two letters beginning with *Z* identifies a longitudinal envelope dimension.

5.4 Letters *W*, *X*, *Y*, *Z*

Any group of two letters beginning with *W*, *X*, *Y* or *Z* identifies a dimension end from the reference point.

5.5 Signs

The sign + after letters means that the stroke is to be added:

ZJ + = *ZJ* plus stroke.

The sign ++ after letters means that twice the stroke is to be added:

ZM ++ = *ZM* plus twice the stroke.

The sign +/ after letters means that half the stroke is to be added:

XV +/ = *XV* plus half the stroke.

5.6 Dimensioning

General dimensions are shown in Figure 8.

© ISO 2018 – All rights reserved
Documents
Document Sharing Hub
Full document details: ISO 6099-2018

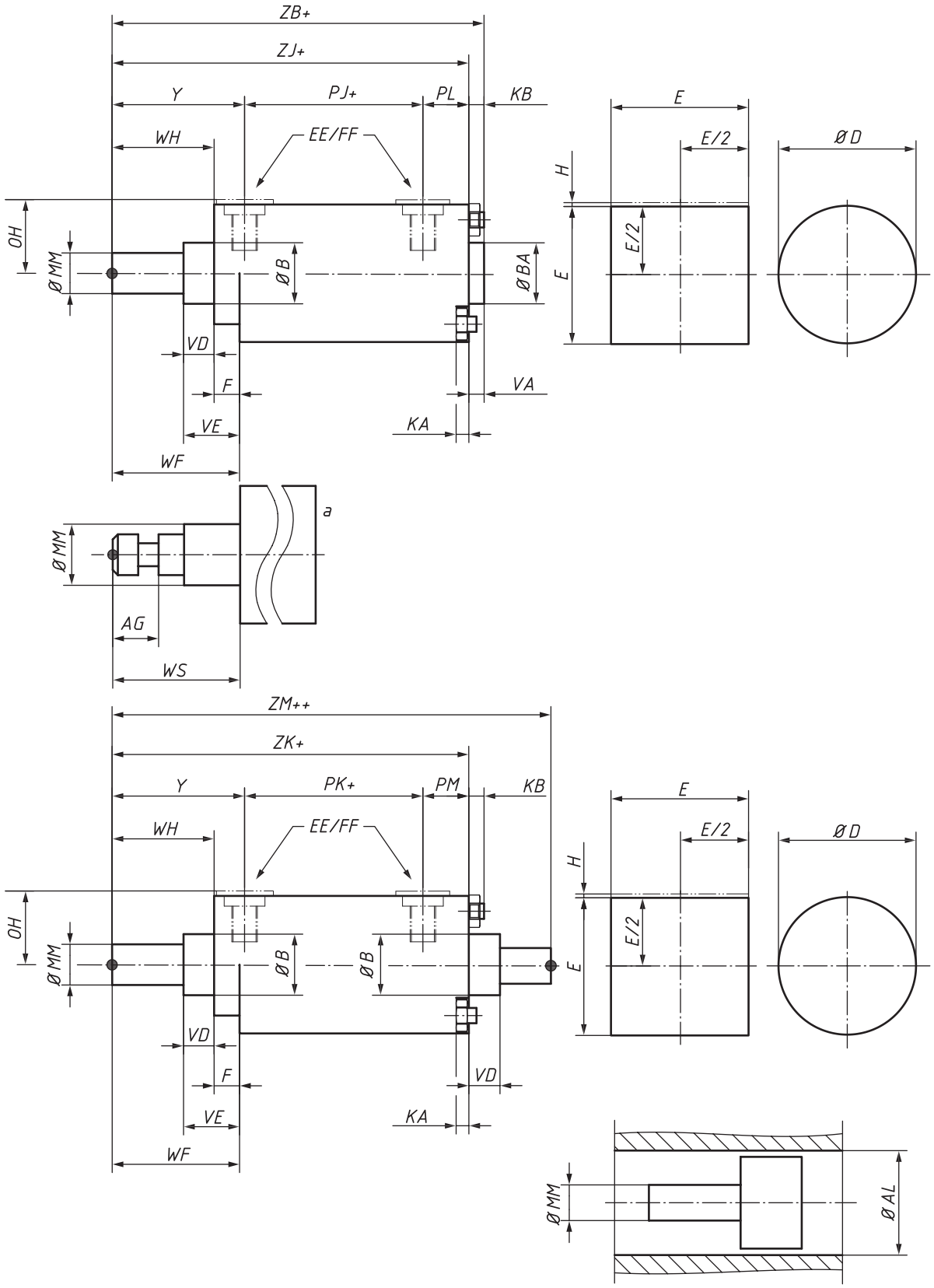

a Refer to Figure 6.

Figure 8 — Arrangement of general cylinder dimensions

© ISO 2018 – All rights reserved

Documents
Document Sharing Hub
Full document details: ISO 6099-2018

6 Identification code for mounting types

6.1 General

The identification code for cylinder mounting types consists of two or three letters and a number.

EXAMPLE 1 Identification code for cylinder mounting types:

MF1

where:

M = mounting

F1 = flange type 1

EXAMPLE 2 Identification code for cylinder mounting types:

MDF2

where:

M = mounting

D = double rod cylinder

F2 = flange type 2

The following letters can be used in place of the letter designating flanges used in the above examples.

Letter	Mounting type
B	body
E	cap or head
F	flange (detachable)
P	pivot
R	threaded nose
S	foot or lugs
T	trunnion
X	studs or tie rods

6.2 Mounting types

The mounting types defined in this document with their identifying code are shown in Table 2.

© ISO 2018 – All rights reserved
Documents
Document Sharing Hub
Full document details: ISO 6099-2018

Table 2 — Mounting types

Identification code	Description	Figure
MB1	Body, through bolt hole	Figure 9
MDB1	Body, through bolt hole — double rod	Figure 10
MB2	Round, through bolt hole	Figure 11
MDB2	Round, through bolt hole — double rod	Figure 12
ME5	Head, rectangular	Figure 13
MDE5	Head, rectangular — double rod	Figure 14
ME6	Cap, rectangular	Figure 15
ME7	Head, round	Figure 16
MDE7	Head, round — double rod	Figure 17
ME8	Cap, round	Figure 18
ME9	Head, square	Figure 19
MDE9	Head, square — double rod	Figure 20
ME10	Cap, square	Figure 21
ME11	Head, square	Figure 22
MDE11	Head, square — double rod	Figure 23
ME12	Cap, square	Figure 24
MF1	Head, rectangular flange	Figure 25
MDF1	Head, rectangular flange — double rod	Figure 26
MF2	Cap, rectangular flange	Figure 27
MF3	Head, circular flange	Figure 28
MDF3	Head, circular flange — double rod	Figure 29
MF4	Cap, circular flange	Figure 30
MF5	Head, square flange	Figure 31
MDF5	Head, square flange — double rod	Figure 32
MF6	Cap, square flange	Figure 33
MF7	Head, circular flange centred on the rear side	Figure 34
MDF7	Head, circular flange centred on the rear side — double rod	Figure 35
MF8	Head, rectangular flange with two holes	Figure 36
MP1	Cap, fixed clevis	Figure 37
MP2	Cap, detachable clevis	Figure 38
MP3	Cap, fixed plain eye	Figure 39
MP4	Cap, detachable plain eye	Figure 40
MP5	Cap, fixed eye with spherical bearing	Figure 41
MP6	Cap, detachable eye with spherical bearing	Figure 42
MP7	Head, detachable clevis	Figure 43
MR3	Head, threaded	Figure 44
MDR3	Head, threaded — double rod	Figure 45
MR4	Cap, threaded	Figure 46
MS1	End angles	Figure 47
MDS1	End angles — double rod	Figure 48
MS2	Side lugs	Figure 49

© ISO 2018 – All rights reserved

Documents
Document Sharing Hub
Full document details: ISO 6099-2018

Table 2 *(continued)*

Identification code	Description	Figure
MDS2	Side lugs — double rod	Figure 50
MS3	Head angle	Figure 51
MT1	Head, integral trunnion (male)	Figure 52
MDT1	Head, integral trunnion (male) — double rod	Figure 53
MT2	Cap, integral trunnion (male)	Figure 54
MT4	Intermediate trunnion (male) fixed or mobile	Figure 55
MDT4	Intermediate trunnion (male) fixed or mobile — double rod	Figure 56
MT5	Head, detachable trunnion (male)	Figure 57
MT6	Cap, detachable trunnion (male)	Figure 58
MX1	Both ends studs or tie rods extended	Figure 59
MDX1	Both ends studs or tie rods extended — double rod	Figure 60
MX2	Cap studs or tie rods extended	Figure 61
MDX2	Cap studs or tie rods extended — double rod	Figure 62
MX3	Head studs or tie rods extended	Figure 63
MX4	Both ends 2 studs or tie rods extended	Figure 64
MDX4	Both ends 2 studs or tie rods extended — double rod	Figure 65
MX5	Head, tapped	Figure 66
MDX5	Head, tapped — double rod	Figure 67
MX6	Cap, tapped	Figure 68
MX7	Head, tapped, and cap studs or tie rods extended	Figure 69
MDX7	Head, tapped, and cap studs or tie rods extended — double rod	Figure 70
MX8	Head and cap, tapped	Figure 71
MDX8	Head and cap, tapped — double rod	Figure 72

6.3 Letter codes of mounting and envelope dimensions according to cylinder mounting type

The letter code for mounting and envelope dimensions according to cylinder mounting type is shown in Figure 9 to Figure 72, and the designation is given in Tables 4 to 26.

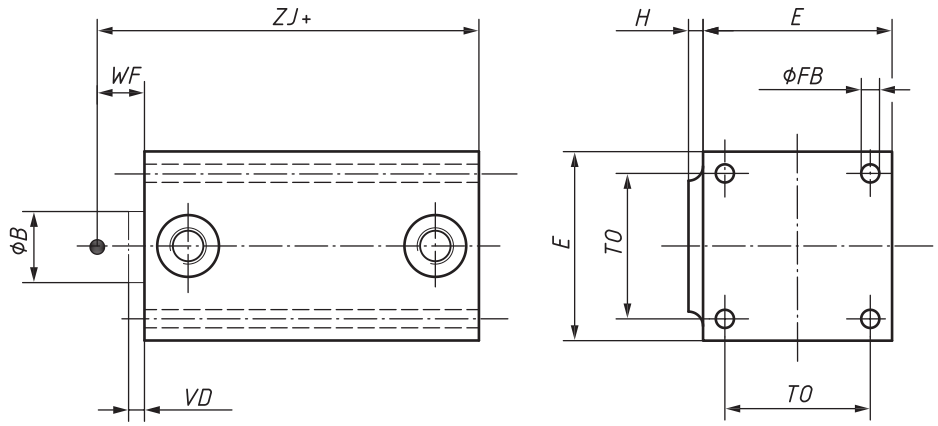

Figure 9 — MB1 — Body, through bolthole

© ISO 2018 – All rights reserved
Documents
Document Sharing Hub
Full document details: ISO 6099-2018

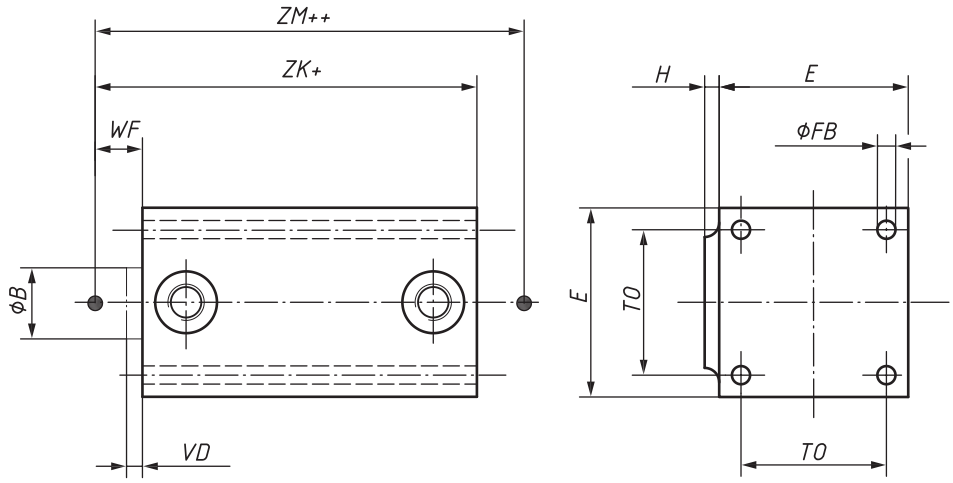

Figure 10 — MDB1 — Body, through bolthole — Double rod

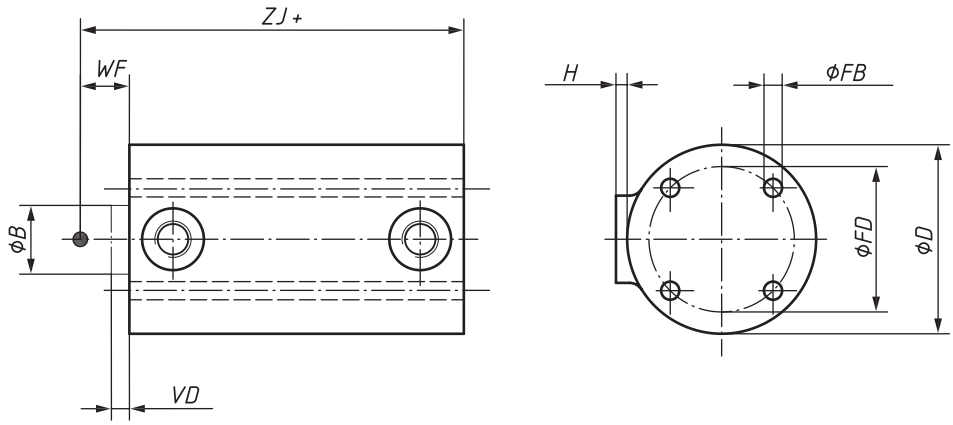

Figure 11 — MB2 — Round, through bolthole

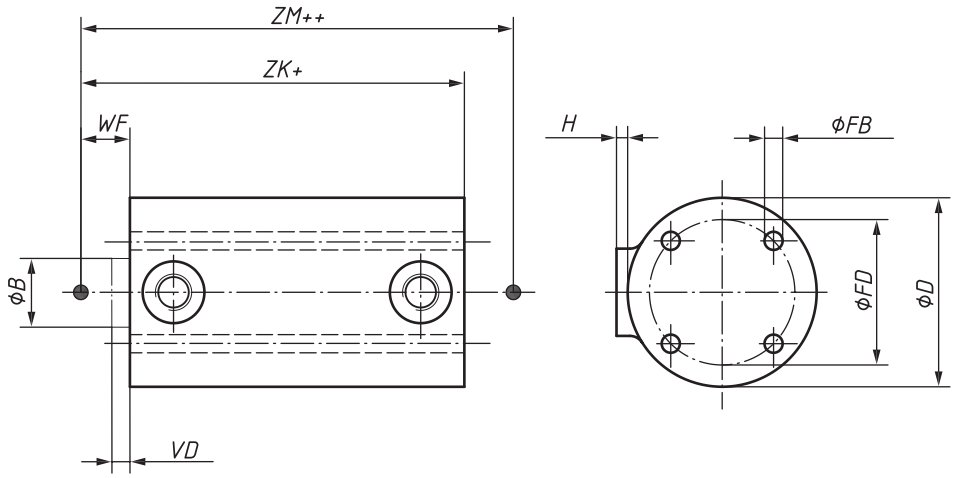

Figure 12 — MDB2 — Round, through bolthole — Double rod

© ISO 2018 – All rights reserved

Documents
Document Sharing Hub
Full document details: ISO 6099-2018

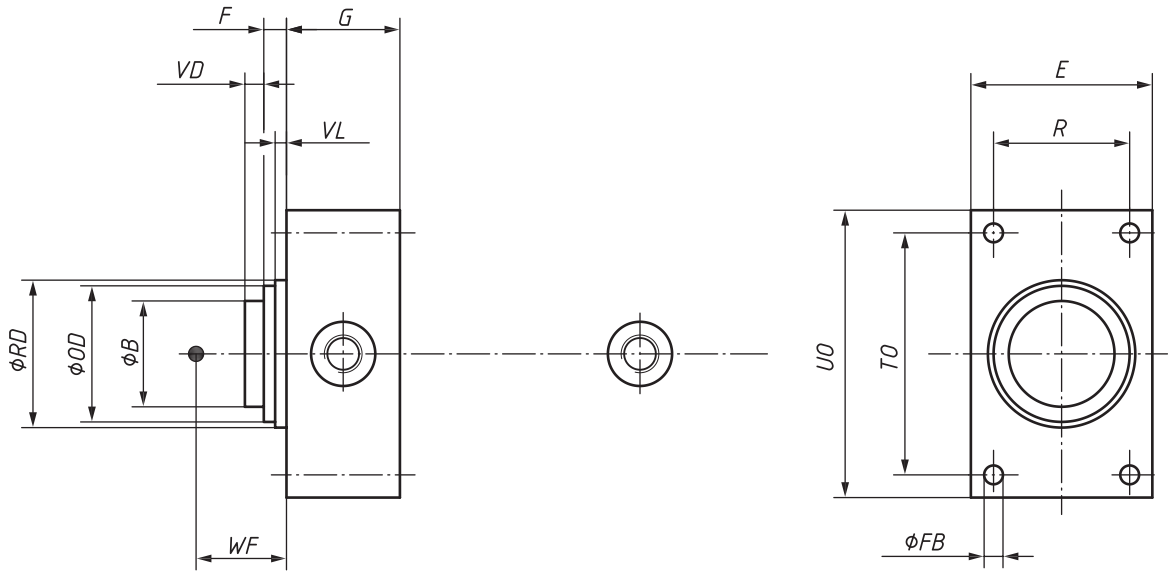

Figure 13 — ME5 — Head, rectangular

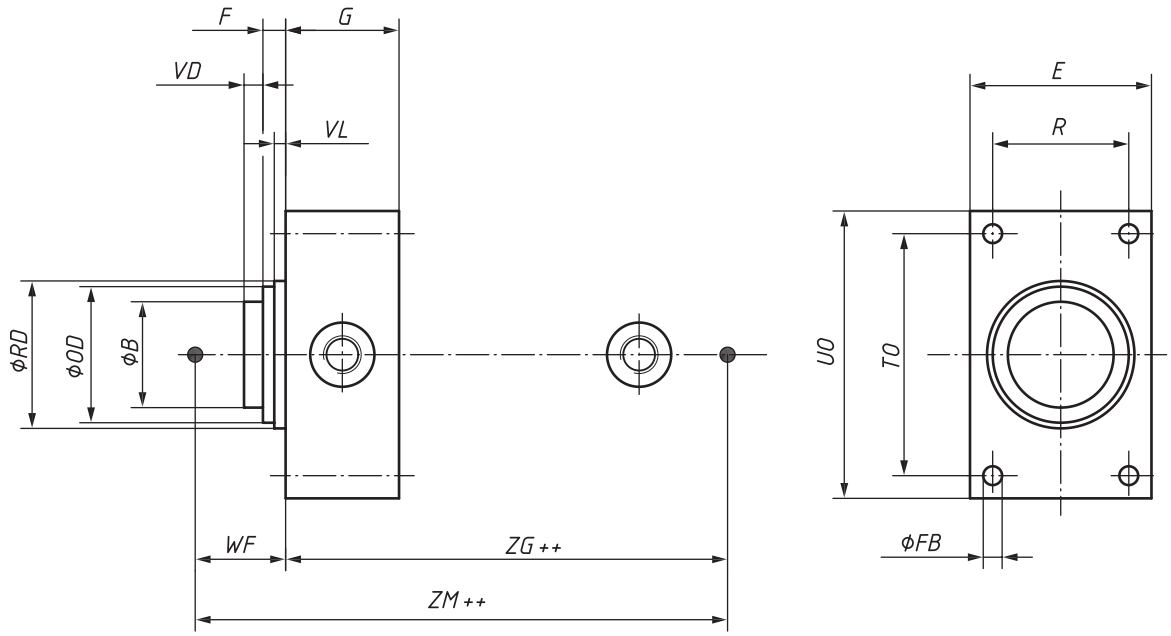

Figure 14 — MDE5 — Head, rectangular — Double rod

© ISO 2018 – All rights reserved
Documents
Document Sharing Hub
Full document details: ISO 6099-2018

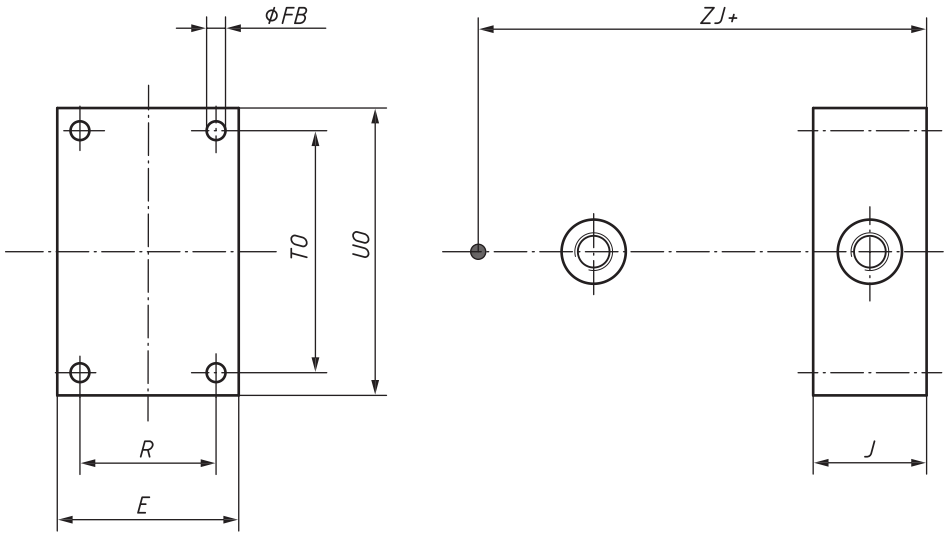

Figure 15 — ME6 — Cap, rectangular

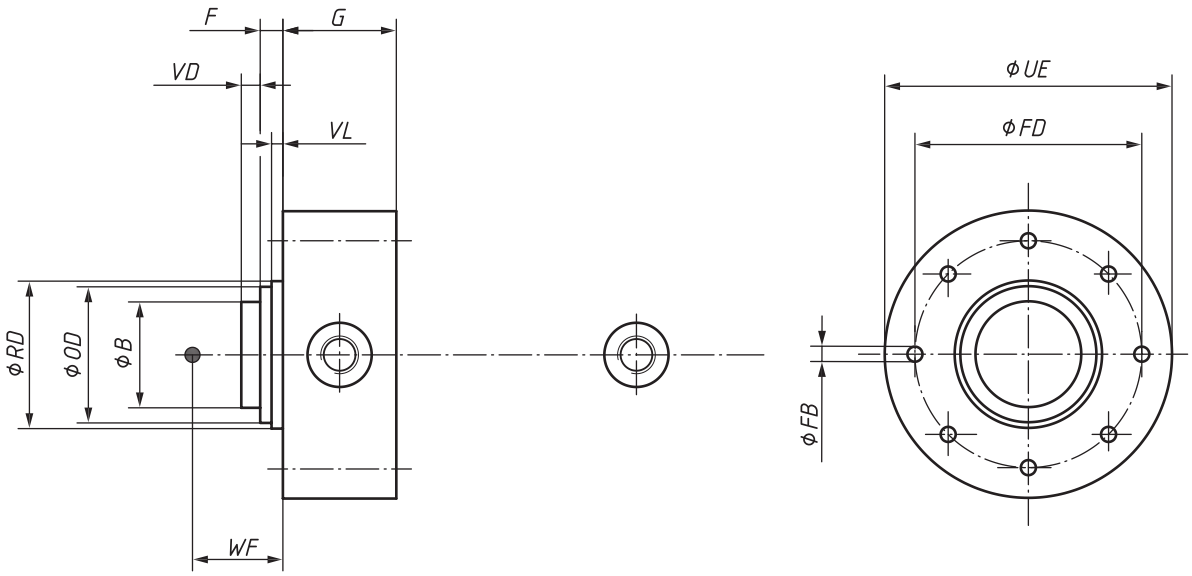

Figure 16 — ME7 — Head, round

© ISO 2018 – All rights reserved

Documents
Document Sharing Hub
Full document details: ISO 6099-2018

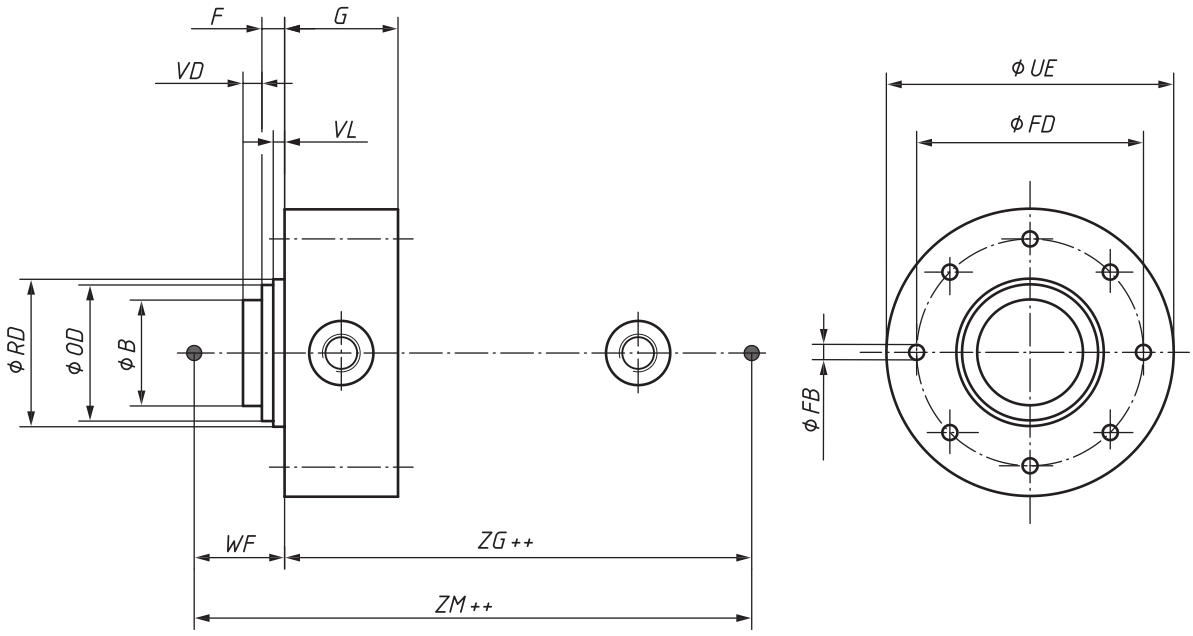

Figure 17 — MDE7 — Head, round — Double rod

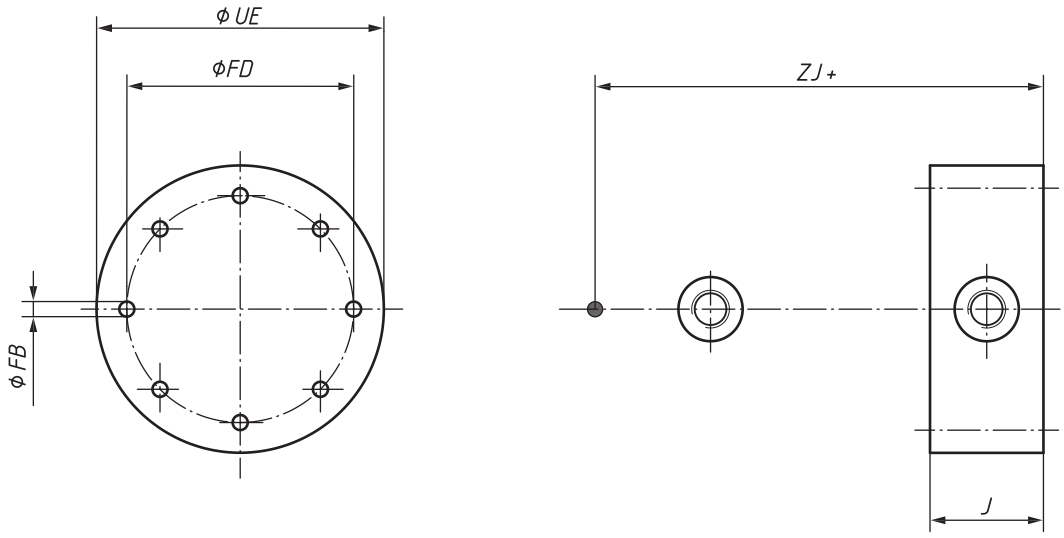

Figure 18 — ME8 — Cap, round

© ISO 2018 – All rights reserved
Documents
Document Sharing Hub
Full document details: ISO 6099-2018

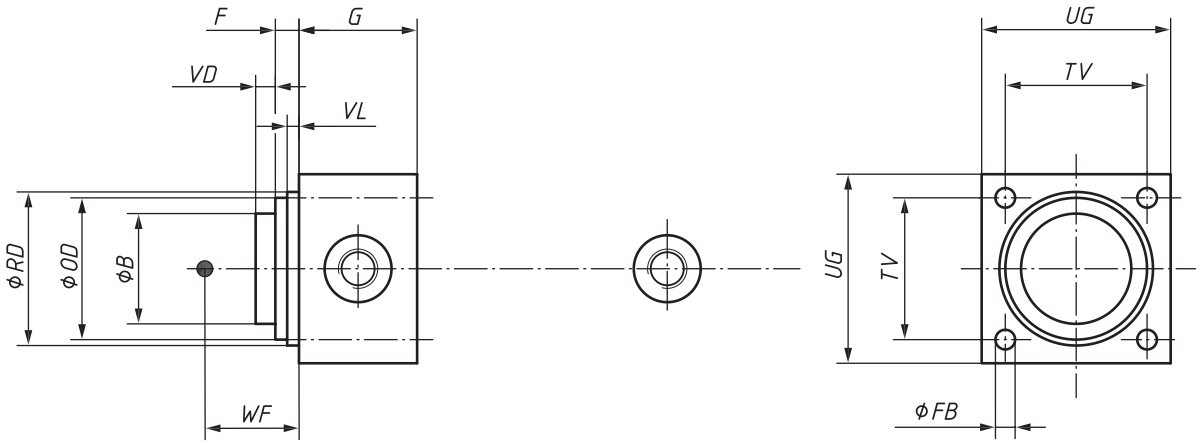

Figure 19 — ME9 — Head, square

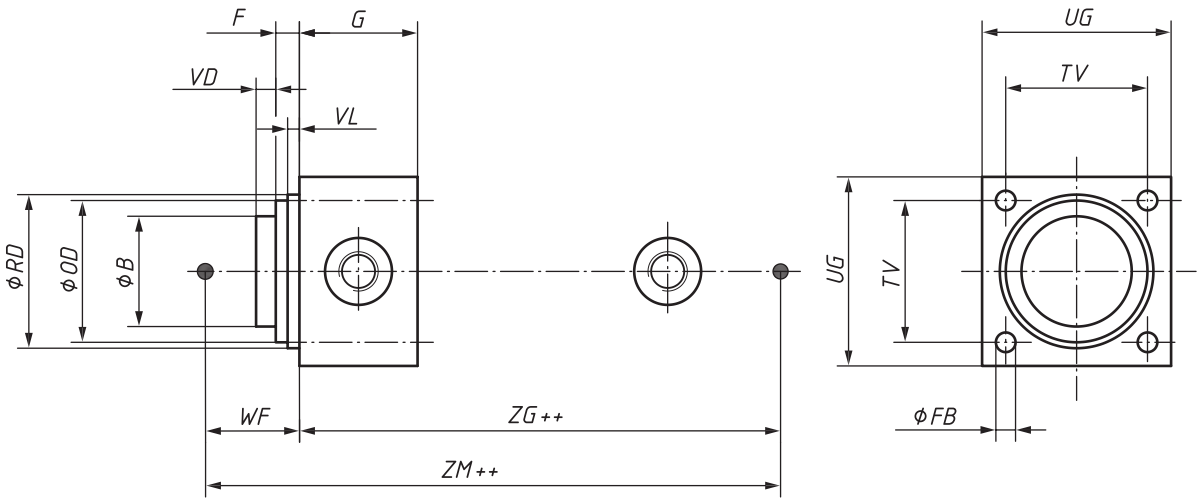

Figure 20 — MDE9 — Head, square — Double rod

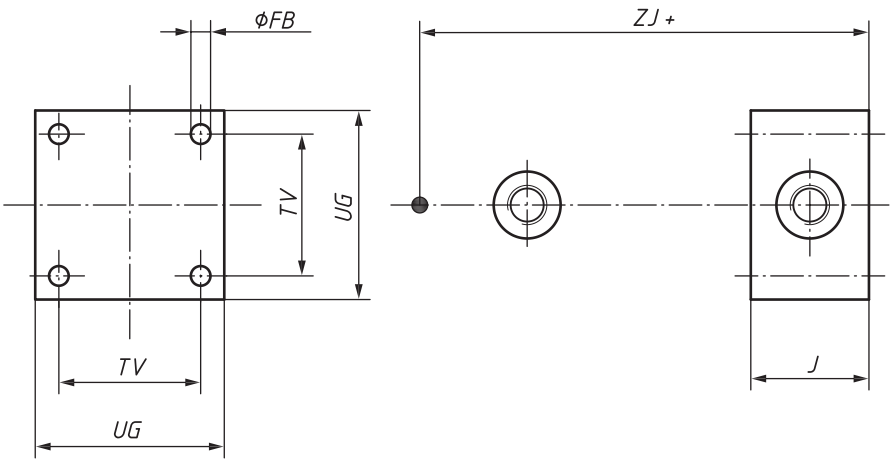

Figure 21 — ME10 — Cap, square

© ISO 2018 – All rights reserved

Documents
Document Sharing Hub
Full document details: ISO 6099-2018

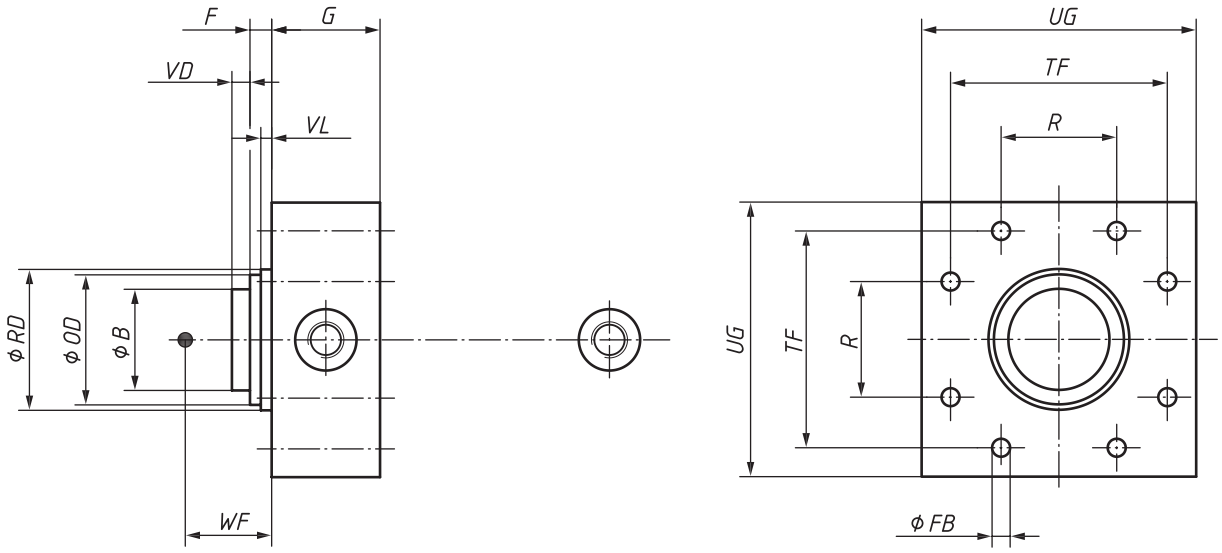

Figure 22 — ME11 — Head, square

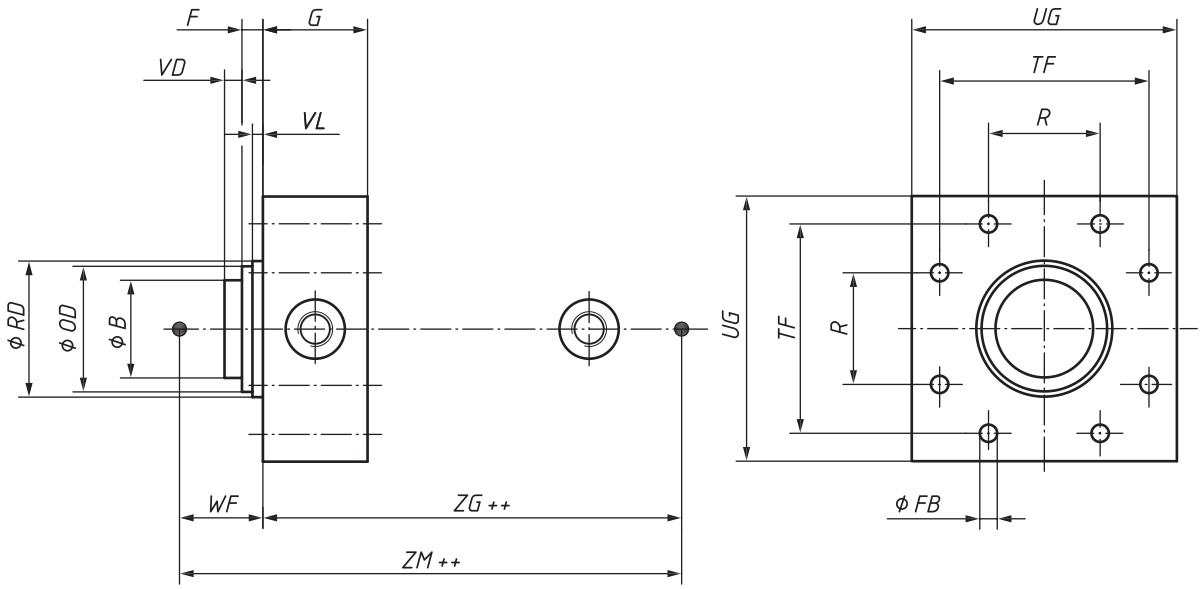

Figure 23 — MDE11 — Head, square — Double rod

© ISO 2018 – All rights reserved
Documents
Document Sharing Hub
Full document details: ISO 6099-2018

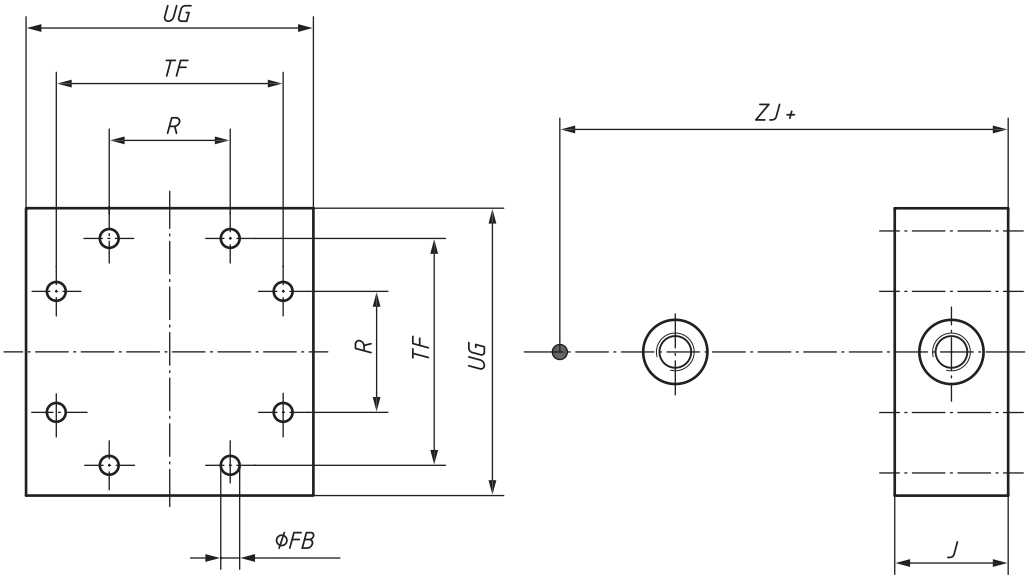

Figure 24 — ME12 — Cap, square

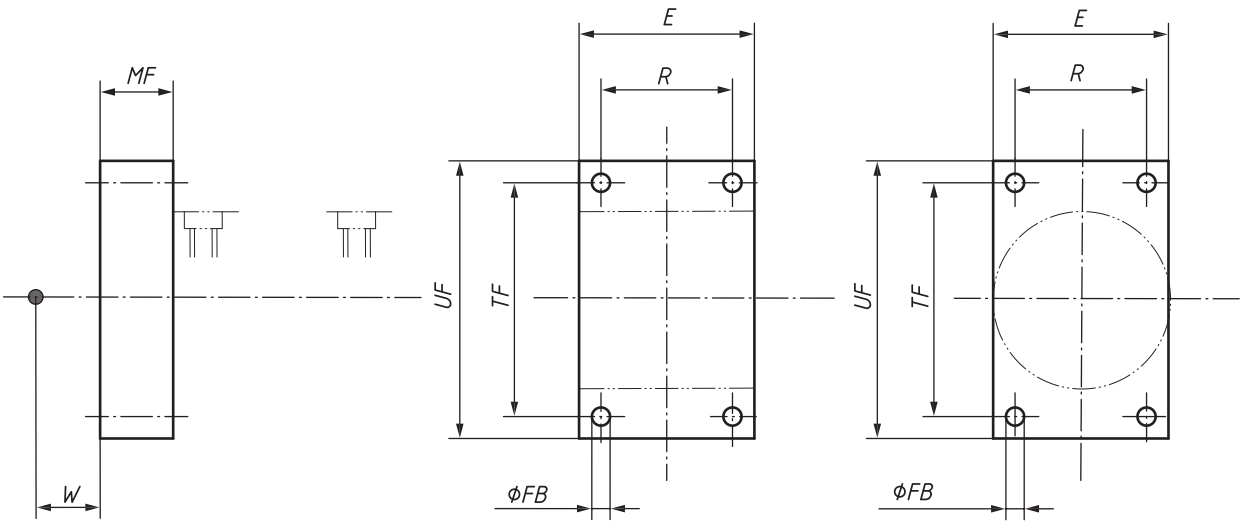

Figure 25 — MF1 — Head, rectangular flange

© ISO 2018 – All rights reserved

Documents
Document Sharing Hub
Full document details: ISO 6099-2018