INTERNATIONAL STANDARD

ISO 7770

Third edition
2009-05-15

Textiles — Test method for assessing the smoothness appearance of seams in fabrics after cleansing

Textiles — Méthode d'essai pour l'évaluation de la régularité d'aspect des coutures sur les étoffes après nettoyage

Reference number
ISO 7770:2009(E)

Documents
Document Sharing Hub

© ISO 2009

Full document details: ISO 7770-2009

PDF disclaimer

This PDF file may contain embedded typefaces. In accordance with Adobe's licensing policy, this file may be printed or viewed but shall not be edited unless the typefaces which are embedded are licensed to and installed on the computer performing the editing. In downloading this file, parties accept therein the responsibility of not infringing Adobe's licensing policy. The ISO Central Secretariat accepts no liability in this area.

Adobe is a trademark of Adobe Systems Incorporated.

Details of the software products used to create this PDF file can be found in the General Info relative to the file; the PDF-creation parameters were optimized for printing. Every care has been taken to ensure that the file is suitable for use by ISO member bodies. In the unlikely event that a problem relating to it is found, please inform the Central Secretariat at the address given below.

COPYRIGHT PROTECTED DOCUMENT

© ISO 2009

All rights reserved. Unless otherwise specified, no part of this publication may be reproduced or utilized in any form or by any means, electronic or mechanical, including photocopying and microfilm, without permission in writing from either ISO at the address below or ISO's member body in the country of the requester.

ISO copyright office
Case postale 56 • CH-1211 Geneva 20
Tel. + 41 22 749 01 11
Fax + 41 22 749 09 47
E-mail copyright@iso.org
Web www.iso.org

Published in Switzerland

© ISO 2009 – All rights reserved

Documents
Document Sharing Hub

Full document details: ISO 7770-2009

Contents

Page

Foreword ..... **iv**
1 Scope **1**
2 Normative references **1**
3 Principle **1**
4 Apparatus **1**
5 Test specimens **2**
6 Procedure **2**
7 Expression of results **3**
8 Test report **3**
Annex A (informative) **Digital description of the ISO seam-pucker replicas** **9**

© ISO 2009 – All rights reserved

Documents
Document Sharing Hub
Full document details: ISO 7770-2009

Foreword

ISO (the International Organization for Standardization) is a worldwide federation of national standards bodies (ISO member bodies). The work of preparing International Standards is normally carried out through ISO technical committees. Each member body interested in a subject for which a technical committee has been established has the right to be represented on that committee. International organizations, governmental and non-governmental, in liaison with ISO, also take part in the work. ISO collaborates closely with the International Electrotechnical Commission (IEC) on all matters of electrotechnical standardization.

International Standards are drafted in accordance with the rules given in the ISO/IEC Directives, Part 2.

The main task of technical committees is to prepare International Standards. Draft International Standards adopted by the technical committees are circulated to the member bodies for voting. Publication as an International Standard requires approval by at least 75 % of the member bodies casting a vote.

Attention is drawn to the possibility that some of the elements of this document may be the subject of patent rights. ISO shall not be held responsible for identifying any or all such patent rights.

ISO 7770 was prepared by Technical Committee ISO/TC 38, *Textiles*, Subcommittee SC 2, *Cleansing, finishing and water resistance tests*.

This third edition cancels and replaces the second edition (ISO 7770:2006), of which it constitutes a minor revision. It incorporates ISO 7770:2006/DAmd.1:2008 to add Annex A (informative).

© ISO 2009 – All rights reserved
Documents
Document Sharing Hub
Full document details: ISO 7770-2009

Textiles — Test method for assessing the smoothness appearance of seams in fabrics after cleansing

1 Scope

This International Standard specifies a test method for evaluating the smoothness appearance of seams in fabrics, after one or several cleansing treatments. A seaming technique is not included, since the purpose is to evaluate existing seams.

This method has been developed for use primarily with type B domestic washing machines, as defined in ISO 6330, in the cleansing process. However, it may be possible to use it with type A machines, as defined in the same International Standard.

NOTE A digital description of the ISO seam-pucker replicas is given in Annex A.

2 Normative references

The following referenced documents are indispensable for the application of this document. For dated references, only the edition cited applies. For undated references, the latest edition of the referenced document (including any amendments) applies.

ISO 105-A03, *Textiles — Tests for colour fastness — Part A03: Grey scale for assessing staining*

ISO 139, *Textiles — Standard atmospheres for conditioning and testing*

ISO 3175 (all parts), *Textiles — Professional care, drycleaning and wetcleaning of fabrics and garments*

ISO 6330, *Textiles — Domestic washing and drying procedures for textile testing*

3 Principle

3.1 Seamed fabric specimens are subjected to procedures simulating cleansing practices. One of the washing and drying procedures specified in ISO 6330 or one of the professional procedures specified in ISO 3175 is used, as agreed between the interested parties.

3.2 The specimens are compared visually with photographic or 3D plastic replica standards under specified illumination.

4 Apparatus

4.1 **Washing and drying apparatus**, as specified in ISO 6330, or **professional care apparatus**, as specified in ISO 3175.

4.2 **Steam** or **dry iron**, with appropriate fabric temperature settings.

© ISO 2009 – All rights reserved

Documents
Document Sharing Hub
Full document details: ISO 7770-2009

4.3 Lighting.

The evaluation area shall be a darkened room, using the lighting and viewing arrangement shown in Figure 1 and comprising the following items. Lamp dimensions should be chosen to extend beyond the overall surface of a test specimen and replicas, when used for the assessment.

4.3.1 Two CW (cool white) fluorescent lamps, without baffle or glass, a minimum of 2 m in length each, placed side by side.

4.3.2 One white enamel reflector, without baffle or glass.

4.3.3 One thick plywood viewing board, painted grey to match the No. 2 rating on the grey scale for assessing staining specified in ISO 105-A03.

4.4 Photographic standards, prepared for evaluating seam appearance (single and double needle stitching) as shown in Figures 2 and 3 [1)].

4.5 Three-dimensional (3D) plastic replica standards, prepared for evaluating seam appearance (single and double needle stitching), as shown in Figures 4 and 5 [2)].

5 Test specimens

Prepare three test specimens, each measuring 38 cm × 38 cm and pinked to prevent fraying and each prepared in an identical manner with a seam inserted through the middle of the length direction of the fabric. If the fabric is wrinkled, it may be smoothed by appropriate ironing prior to testing. Care shall be taken to avoid altering the quality of the seam itself.

If excessive fraying is anticipated, specimens shall be stitched loosely 1 cm in from the edges, using dimensionally stable thread.

6 Procedure

6.1 Treat each specimen in accordance with one of the procedures specified in ISO 6330 or ISO 3175, as agreed between the interested parties.

6.2 If required, repeat the selected treatment four times, to give a total of five cycles.

6.3 Condition the test specimens for a minimum of 4 h and maximum of 24 h according to ISO 139, by hanging each specimen by two corners with the seam in a vertical position or, alternatively, using full-width clamps.

6.4 For the evaluation, carry out steps 6.4.1 to 6.4.5.

6.4.1 Three observers shall rate each treated test specimen independently.

---

1) The standards shown in Figures 2 and 3 are for illustrative purposes only. The standards may be obtained from AATCC Technical Center, One Davis Drive, P.O. Box 12215, Research Triangle Park, North Carolina 27709-2215, USA; Tel: +1 919-549-8141; Fax: +1 919-549-8933; http://www.aatcc.org/. This information is given for the convenience of the users of this document and does not constitute an endorsement by ISO of the product named. Equivalent products may be used if they can be shown to lead to the same results.

2) The standards shown in Figures 4 and 5 are for illustrative purposes only. The standards may be obtained from Japanese Standards Association (JSA), 4-1-24 Akasaka, Minato-Ku, Tokyo 107-8440 Japan; Tel: +81-3-3583-8002; Fax: +81-3-3583-0462; http://www.jsa.or.jp/. This information is given for the convenience of the users of this document and does not constitute an endorsement by ISO of the product named. Equivalent products may be used if they can be shown to lead to the same results.

© ISO 2009 – All rights reserved
Documents
Document Sharing Hub
Full document details: ISO 7770-2009

6.4.2 Mount the test specimen on the viewing board (4.3.3) as illustrated in Figure 1, with the seam in the vertical direction. Place the appropriate photographic standards (4.4) (single or double needle) alongside or the appropriate 3D plastic replica standards (4.5) (single or double needle) on either side of the test specimen to facilitate comparative rating. (See Note, Figure 1.)

The overhead fluorescent light (4.3.1) shall be the only light source for the viewing board, and all other lights in the room shall be turned off. It has been the experience of many observers that the light reflected from the side walls near the viewing board can interfere with the rating results. It is recommended that the side walls be painted black or that blackout curtains be mounted on either side of the viewing board to eliminate the reflective interference.

6.4.3 The observer shall stand directly in front of the replica, 1,2 m away from the board. It has been found that normal variations in the height of the observer above and below the arbitrary 1,5 m eye level have no significant effect on the rating given.

6.4.4 Confine observations to the area influenced by the seam and disregard the appearance of the fabric itself. Assign the number of the photographic standard or assign a grade midway between the JIS three-dimensional plastic replica standards that most nearly match the appearance of the seam in the test specimen (see Figures 2, 3, 4 and 5 and Table 1).

Standard 5 represents the best level of seam appearance while Standard 1 represents the poorest level of seam appearance.

6.4.5 Similarly, the observer shall independently rate each of the other two test specimens. The other two observers shall proceed in the same manner, assigning ratings independently.

7 Expression of results

Average the nine observations made by the three observers on the set of three test specimens. Report the average to the nearest half of a rating.

Table 1 — Seam appearance ratings

Class	Seam appearance
5	Equivalent to Standard 5
4,5	Midway between Standard 5 and Standard 4
4	Equivalent to Standard 4
3,5	Midway between Standard 4 and Standard 3
3	Equivalent to Standard 3
2,5	Midway between Standard 3 and Standard 2
2	Equivalent to Standard 2
1,5	Midway between Standard 2 and Standard 1
1	Equivalent to or worse than Standard 1

8 Test report

The test report shall include the following information:

a) a reference to this International Standard (ISO 7770:2009);

b) details of the sample evaluated;

© ISO 2009 – All rights reserved

Documents
Document Sharing Hub
Full document details: ISO 7770-2009

c) details of the cleansing procedures used, as specified in ISO 6330;

d) the number of cleansing cycles used;

e) the standard replica used;

f) the seam appearance rating as calculated according to Clause 7 and expressed according to Table 1;

g) details of any deviation from the specified procedure.

Dimensions in metres

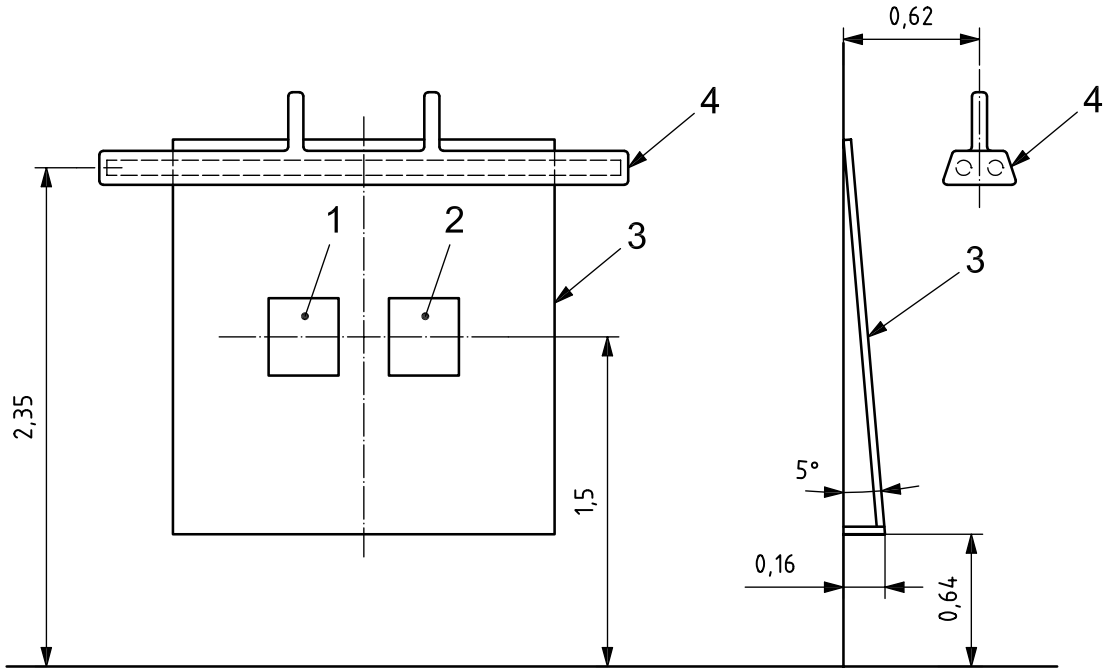

Key

1 standard

2 test specimen

3 board for viewing

4 example of fluorescent lamp placement

NOTE When using 3D plastic replica standards, a test specimen is placed in the middle and 3D replicas are placed on either side.

Figure 1 — Lighting equipment for viewing test specimens

© ISO 2009 – All rights reserved

Documents
Document Sharing Hub
Full document details: ISO 7770-2009

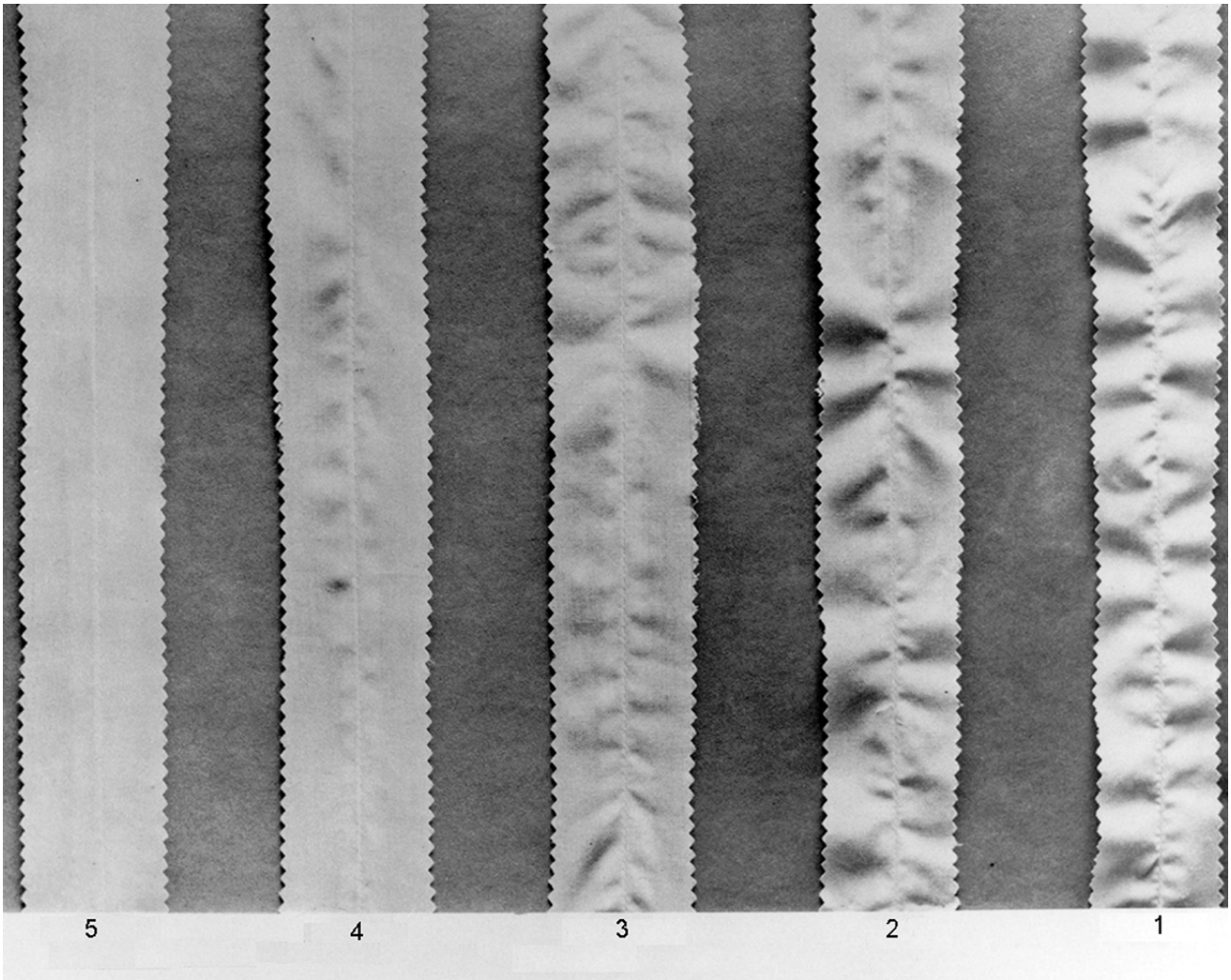

Figure 2 — Photographic comparative ratings for single needle seams

© ISO 2009 – All rights reserved

Documents
Document Sharing Hub
Full document details: ISO 7770-2009