International Standard ISO 7811/1

INTERNATIONAL ORGANIZATION FOR STANDARDIZATION•МЕЖДУНАРОДНАЯ ОРГАНИЗАЦИЯ ПО СТАНДАРТИЗАЦИИ•ORGANISATION INTERNATIONALE DE NORMALISATION

Identification cards — Recording technique — Part 1: Embossing

Cartes d'identification — Technique d'enregistrement — Partie 1: Estampage

First edition — 1985-12-15

UDC 681.178.5 **Ref. No. ISO 7811/1-1985 (E)**

Descriptors : information interchange, identity cards, data recording, character sets, specifications.

Documents
Document Sharing Hub

Price based on 24 pages

Full document details: ISO 7811-1-1985

Foreword

ISO (the International Organization for Standardization) is a worldwide federation of national standards bodies (ISO member bodies). The work of preparing International Standards is normally carried out through ISO technical committees. Each member body interested in a subject for which a technical committee has been established has the right to be represented on that committee. International organizations, governmental and non-governmental, in liaison with ISO, also take part in the work.

Draft International Standards adopted by the technical committees are circulated to the member bodies for approval before their acceptance as International Standards by the ISO Council. They are approved in accordance with ISO procedures requiring at least 75 % approval by the member bodies voting.

International Standard ISO 7811/1 was prepared by Technical Committee ISO/TC 97, *Information processing systems*.

The following International Standards cancel and replace ISO 2894 and ISO 3554, of which they constitute a technical revision:

ISO 7810, ISO 7811/1, ISO 7811/2, ISO 7811/3, ISO 7811/4, ISO 7811/5, ISO 7812, ISO 7813.

Users should note that all International Standards undergo revision from time to time and that any reference made herein to any other International Standard implies its latest edition, unless otherwise stated.

© **International Organization for Standardization, 1985** ●

Printed in Switzerland

Documents
Document Sharing Hub

Full document details: ISO 7811-1-1985

Identification cards — Recording technique — Part 1: Embossing

0 Introduction

This International Standard is one of a series of standards describing the parameters for identification cards as defined in clause 3 below and the use of such cards for international interchange.

1 Scope and field of application

This part of ISO 7811 specifies requirements for embossed characters on identification cards. The embossed characters are intended for transfer of data either by use of imprinters or by visual or machine reading.

2 References

ISO 1073, *Alphanumeric character sets for optical recognition —*

Part 1: Character set OCR-A — Shapes and dimensions of the printed image.

Part 2: Character set OCR-B — Shapes and dimensions of the printed image.

ISO 1831, *Printing specifications for optical character recognition.*

ISO 7810, *Identification cards — Physical characteristics.*

ISO 7811/3, *Identification cards — Recording technique — Part 3: Location of embossed characters on ID-1 cards.*

3 Definitions

For the purpose of this part of ISO 7811 the definition of "identification card" given in ISO 7810 and the following definition apply.

embossing: To raise characters in relief from the front surface of a card.

4 Visually and machine readable characters

4.1 Character set and type font

The numeric characters of one of the following type fonts shall be used for embossed characters intended for visual and/or machine reading, either directly from the card or from card imprints (see annex A):

- ISO 1073/1, OCR-A, Sizes I and IV;
- ISO 1073/2, OCR-B, Sizes I and IV;
- Type font 7B as described in annexes B and C.

NOTE — To ensure system compatability in the choice of font, the attention of intending users is drawn to the necessity of agreement with their potential interchanging partners.

Print specifications are given in ISO 1831.

4.2 Character spacing

The character spacing shall be as follows:

a) nominal spacing : 3,63 mm (0.143 in)

b) minimum spacing between two consecutive characters : 3,48 mm (0.137 in)

4.3 Character height

Maximum height at the printing surface of the embossed characters, encompassing centreline skew and character misalignment shall be

4,32 mm (0.170 in)

4.4 Relief height of embossed characters

Relief height of imprinting character surfaces above the card surface shall be

$0{,}48\ ^{0}_{-0{,}05}$ mm (0.019 $^{0}_{-0{,}002}$ in)

AVA Documents
Document Sharing Hub

Full document details: ISO 7811-1-1985

5 Visually readable characters

(Not intended to be machine readable.)

5.1 Character set and font type

A type font such as the alphanumeric, capital characters in ISO 1073/2, OCR-B, Size I, should be used for embossed characters intended for visual reading either directly from the card or from card imprints.

5.2 Character spacing

The character spacing shall be as follows:

a) nominal spacing : 2,54 mm (0.100 in)

b) minimum spacing between two consecutive characters : 2,46 mm (0.097 in)

5.3 Relief height of embossed characters

Relief height of imprinting character surfaces above the card surface shall be

$0{,}46\ ^{0}_{-0{,}05}$ mm ($0.018\ ^{0}_{-0.002}$ in)

AVA Documents
Document Sharing Hub

Full document details: ISO 7811-1-1985

Annex A

Pictorial representation of numeric data

(This annex forms part of the standard.)

0123456789

OCR-A

0123456789

OCR-B

0123456789

Farrington 7 B

Not to scale

AVA Documents
Document Sharing Hub

Full document details: ISO 7811-1-1985

Annex B

7 B Print specifications

(This annex forms part of the standard.)

B.1 Character set — 7 B Font

The 7 B font consists of the following characters:

The numerals 0 to 9 inclusive.

B.2 Character dimensions — Printed image

Nominal character height
3,81 mm (0.150 in) (centreline)

Nominal character width
2,03 mm (0.080 in) (centreline)

Nominal stroke width
0,51 mm (0.020 in)

Maximum stroke width
0,76 mm (0.030 in)

Minimum stroke width
0,25 mm (0.010 in)

B.3 Character spacing and alignment

The nominal spacing of the characters as printed is 7 to the inch.

The minimum horizontal separation between adjacent characters is 0,38 mm (0.015 in).

Vertical misalignment between adjacent characters shall not exceed 2,03 mm (0,080 in).

Character skew shall not exceed 3°.

Total line skew shall not exceed the limits of the print zone as defined in ISO 7811/3.

B.4 Printing characteristics

B.4.1 Ink density

For optimum performance, the ink (carbon) density of the printed character shall be such that its reflectance is not more than 20 % of the average reflectance of the document on which the character is printed. At worst, the ink density of the printed character must be such that its reflectance is not more than 60 % of the average reflectance of the document on which the character is printed.

NOTE — Reflectance is measured with an incident ilumination of 45° and a viewing angle of 90° to the surface of the document, and using an aperture of measurement 0,20 mm^2 (0.000 3 in^2) on the document.

Acceptable voids and acceptable extraneous marks as defined in B.4.2 and B.4.3 are exceptions to the ink density requirement.

B.4.2 Voids

A void is any area within the maximum stroke width dimension of a printed character in which the reflectance exceeds 60 % of the average reflectance of the document on which a character is printed.

Voids can be acceptable provided they can be entirely contained within a circle of 0,25 mm (0.010 in) diameter, there is a minimum separation of 0,71 mm (0.28 in) centre to centre between the voids, and provided the resulting minimum effective stroke width dimension is not less than 0,20 mm (0.008 in).

No unacceptable voids can be permitted.

B.4.3 Extraneous marks

An extraneous mark is any mark within either the printing or clear zone, but not within the printed character area, in which the reflectance is less than 60 % of the average reflectance of the document on which the marks occur.

Extraneous marks can be acceptable provided they can be entirely contained within a circle of 0,25 mm (0.010 in) diameter, and provided there is a minimum separation between the marks of 0,71 mm (0.028 in) centre to centre.

No unacceptable extraneous marks can be permitted.

B.4.4 Embossing

Deformation of the document surface as a result of printing shall not exceed 0,13 mm (0.005 in).

AVA Documents
Document Sharing Hub

Full document details: ISO 7811-1-1985

Documents
Document Sharing Hub

Full document details: ISO 7811-1-1985

Annex C

Printed image of the 7 B font

(This annex forms part of the standard.)

Dimensions in millimetres
(Inches in parentheses)

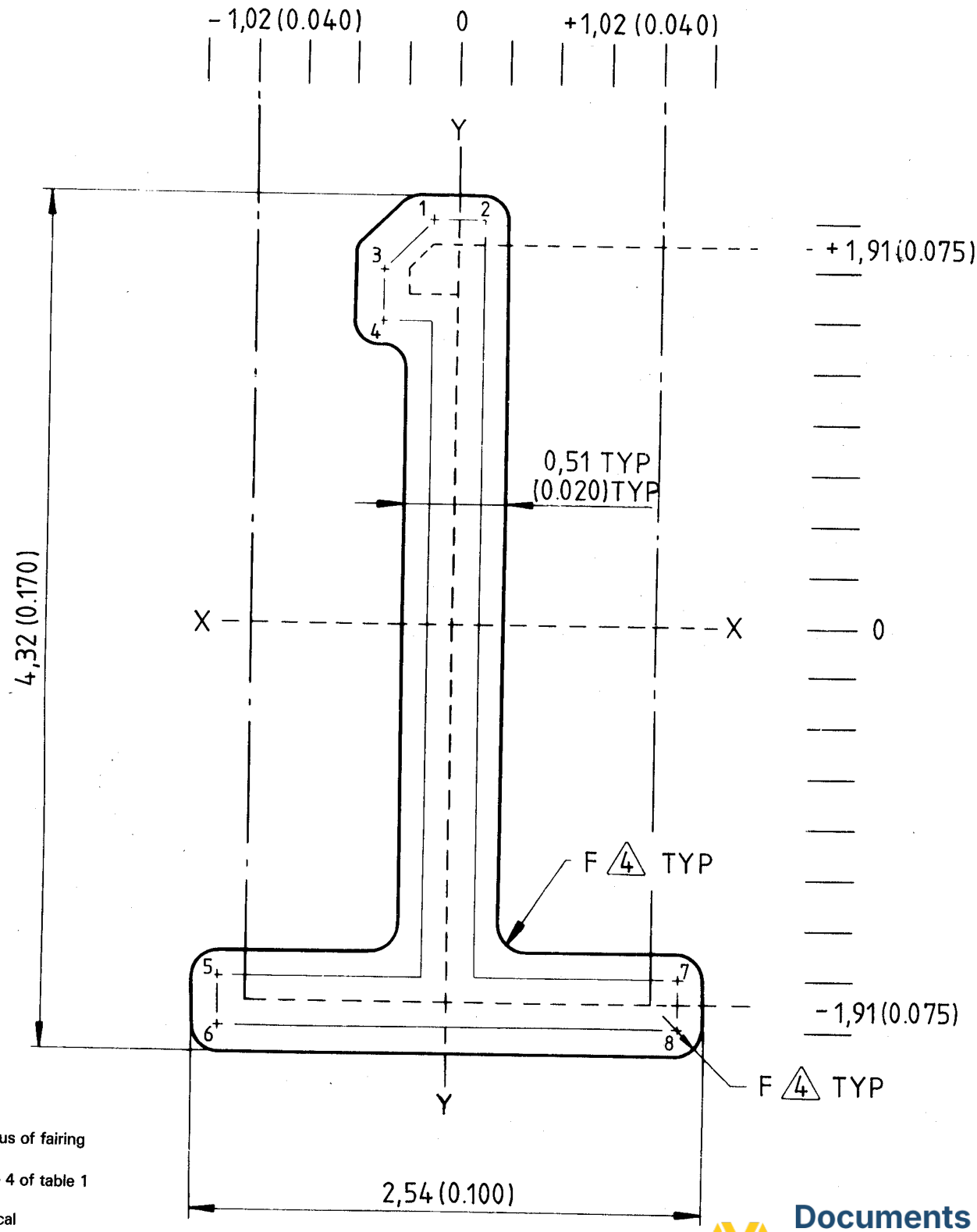

Key:

F : Radius of fairing

4 : Note 4 of table 1

TYP : Typical

Documents
Document Sharing Hub

Full document details: ISO 7811-1-1985

Numeral 1

Co-ordinates table 1

No.	X value from Y – Y		Y value from X – X	
	millimetres	inches	millimetres	inches
1	– 0,13	– 0.005	+ 2,03	+ 0.080
2	+ 0,13	+ 0.005	+ 2,03	+ 0.080
3	– 0,38	– 0.015	+ 1,78	+ 0.070
4	– 0,38	– 0.015	+ 1,52	+ 0.060
5	– 1,14	– 0.045	– 1,78	– 0.070
6	– 1,14	– 0.045	– 2,03	– 0.080
7	+ 1,14	+ 0.045	– 1,78	– 0.070
8	+ 1,14	+ 0.045	– 2,03	– 0.080

NOTES

1 Closest nominal spacing 7 characters per 25,4 mm (1 in). Wider spacing is permissible.

2 Character shown as printed on document and not necessarily as engraved or embossed.

3 Tolerances: all character centreline dimensions are ± 0,08 mm (± 0.003 in).

4 Radius of fairing (F) on stroke edges is 0,13 mm (0.005 in) nominal ± 0,13 mm (± 0.005 in).

AVA Documents
Document Sharing Hub

Full document details: ISO 7811-1-1985