INTERNATIONAL STANDARD

ISO 857-2

First edition
2005-11-01

Welding and allied processes — Vocabulary —

Part 2: Soldering and brazing processes and related terms

Soudage et techniques connexes — Vocabulaire —

Partie 2: Termes relatifs aux procédés de brasage tendre et de brasage fort

Reference number
ISO 857-2:2005(E)

© ISO 2005

Copyright International Organization for Standardization
Reproduced by IHS under license with ISO
No reproduction or networking permitted without license from IHS
Full document details: ISO 857-2-2005

Not for Resale

PDF disclaimer

This PDF file may contain embedded typefaces. In accordance with Adobe's licensing policy, this file may be printed or viewed but shall not be edited unless the typefaces which are embedded are licensed to and installed on the computer performing the editing. In downloading this file, parties accept therein the responsibility of not infringing Adobe's licensing policy. The ISO Central Secretariat accepts no liability in this area.

Adobe is a trademark of Adobe Systems Incorporated.

Details of the software products used to create this PDF file can be found in the General Info relative to the file; the PDF-creation parameters were optimized for printing. Every care has been taken to ensure that the file is suitable for use by ISO member bodies. In the unlikely event that a problem relating to it is found, please inform the Central Secretariat at the address given below.

© ISO 2005

The reproduction of the terms and definitions contained in this International Standard is permitted in teaching manuals, instruction booklets, technical publications and journals for strictly educational or implementation purposes. The conditions for such reproduction are: that no modifications are made to the terms and definitions; that such reproduction is not permitted for dictionaries or similar publications offered for sale; and that this International Standard is referenced as the source document.

With the sole exceptions noted above, no other part of this publication may be reproduced or utilized in any form or by any means, electronic or mechanical, including photocopying and microfilm, without permission in writing from either ISO at the address below or ISO's member body in the country of the requester.

ISO copyright office
Case postale 56 • CH-1211 Geneva 20
Tel. + 41 22 749 01 11
Fax + 41 22 749 09 47
E-mail copyright@iso.org
Web www.iso.org

Published in Switzerland

© ISO 2005 – All rights reserved

Copyright International Organization for Standardization
Reproduced by IHS under license with ISO
No reproduction or networking permitted without license from IHS
Not for Resale
Full document details: ISO 857-2-2005

Contents

Page

Foreword v
Introduction vi
1 Scope 1
2 Normative references 1
3 Terms and definitions 1
Annex A (informative) **Process descriptions based on energy sources** 9
A.1 Soldering 9
A.2 Brazing 16
Annex B (informative) **List of equivalent English, French and German terms for brazing and soldering processes** 24
Alphabetical index 28

--`,,```,,,,```-`-`,,`,,`,`,,`---
© ISO 2005 – All rights reserved
Copyright International Organization for Standardization
Reproduced by IHS under license with ISO
No reproduction or networking permitted without license from IHS
Not for Resale
Documents
Document Sharing Hub
Full document details: ISO 857-2-2005

Foreword

ISO (the International Organization for Standardization) is a worldwide federation of national standards bodies (ISO member bodies). The work of preparing International Standards is normally carried out through ISO technical committees. Each member body interested in a subject for which a technical committee has been established has the right to be represented on that committee. International organizations, governmental and non-governmental, in liaison with ISO, also take part in the work. ISO collaborates closely with the International Electrotechnical Commission (IEC) on all matters of electrotechnical standardization.

International Standards are drafted in accordance with the rules given in the ISO/IEC Directives, Part 2.

The main task of technical committees is to prepare International Standards. Draft International Standards adopted by the technical committees are circulated to the member bodies for voting. Publication as an International Standard requires approval by at least 75 % of the member bodies casting a vote.

Attention is drawn to the possibility that some of the elements of this document may be the subject of patent rights. ISO shall not be held responsible for identifying any or all such patent rights.

ISO 857-2 was prepared by Technical Committee ISO/TC 44, *Welding and allied processes*, Subcommittee SC 7, *Representation and terms*.

Together with ISO 857-1, this part of ISO 857 cancels and replaces ISO 857:1990, which has been technically revised.

ISO 857 consists of the following parts, under the general title *Welding and allied processes — Vocabulary*:

— *Part 1: Metal welding processes*

— *Part 2: Soldering and brazing processes and related terms*

© ISO 2005 – All rights reserved

Copyright International Organization for Standardization
Reproduced by IHS under license with ISO
No reproduction or networking permitted without license from IHS
Not for Resale
Full document details: ISO 857-2-2005

Introduction

ISO 857:1990 has been revised in two new parts, ISO 857-1, *Welding and allied processes — Vocabulary — Part 1: Metal welding processes*, and ISO 857-2, *Welding and allied processes — Vocabulary — Part 2: Soldering and brazing processes and related terms*.

ISO 857-1 is restricted to welding processes for metallic materials and the welding processes are structured in a more systematic way than in ISO 857:1990. The processes have been classified according to their physical characteristics, e.g. pressure or fusion welding, and the type of energy source. A number of new processes have been added and a number of obsolete processes have been removed.

ISO 857-2 is restricted to soldering and brazing processes and is organized in the same manner as ISO 857-1. New definitions have been added in order to provide a better understanding of such processes.

The numbers in parentheses following the name of the process refer to the numbering used in ISO 4063. Most of the definitions are accompanied by schematic figures given as examples.

Requests for official interpretations of any aspect of this part of ISO 857 should be directed to the Secretariat of ISO/TC 44/SC 7 via your national standards body. A complete listing of these bodies can be found at www.iso.org.

© ISO 2005 – All rights reserved

Documents
Document Sharing Hub
Copyright International Organization for Standardization
Reproduced by IHS under license with ISO
No reproduction or networking permitted without license from IHS
Not for Resale
Full document details: ISO 857-2-2005

Documents
Document Sharing Hub
Copyright International Organization for Standardization
Reproduced by IHS under license with ISO
No reproduction or networking permitted without license from IHS
Not for Resale
Full document details: ISO 857-2-2005

Welding and allied processes — Vocabulary —

Part 2:
Soldering and brazing processes and related terms

1 Scope

This part of ISO 857 defines terms used for metal soldering and brazing processes, as well as related terms.

2 Normative references

The following referenced documents are indispensable for the application of this document. For dated references, only the edition cited applies. For undated references, the latest edition of the referenced document (including any amendments) applies.

ISO 4063, *Welding and allied processes — Nomenclature of processes and reference numbers*

3 Terms and definitions

3.1
soldering/brazing
joining processes in which a molten filler material is used that has a lower liquidus temperature than the solidus temperature of the parent material(s), which wets the surfaces of the heated parent material(s) and which, during or after heating, is drawn into (or, if pre-placed, is retained in) the narrow gap between the components being joined

NOTE 1 These processes are generally carried out with metals but they can also be carried out with non-metallic materials. The filler material always has a different chemical composition from the components being joined.

NOTE 2 If the process is carried out without capillary attraction, it is often described as braze welding.

3.1.1
soldering
joining process using filler metal with a liquidus temperature of 450 °C or less

3.1.2
brazing
joining process using filler metal with a liquidus temperature above 450 °C

3.1.3
coating
deposition of a layer or layers of material on a surface to obtain desired properties and/or dimensions

3.1.4
filler metal spreading and gap filling

3.1.4.1
wetting
spreading and adhesion of a thin continuous layer of molten filler metal on the surfaces of the components being joined

© ISO 2005 – All rights reserved

Documents
Document Sharing Hub
Copyright International Organization for Standardization
Reproduced by IHS under license with ISO
No reproduction or networking permitted without license from IHS
Not for Resale
Full document details: ISO 857-2-2005

3.1.4.2
de-wetting
separation of solid filler material which, although it had spread over the surfaces of the components to be joined, had failed to bond to them because of e.g. inadequate cleaning or fluxing

3.1.4.3
flow path
distance through which the molten filler metal flows in the joint

3.1.4.4
capillary attraction
force, caused by surface tension, which draws the molten filler metal into the gap between the components being joined, even against the force of gravity

3.1.4.5
bonding process
process by which a bond is created between the liquid phase of the filler metal and the solid parent metal due to metallurgical reaction

3.2
materials for soldering or brazing

3.2.1
filler metal
added metal required for soldered or brazed joints, which can be in the form of wire, inserts, powder, pastes, etc.

3.2.2
flux
non-metallic material which, when molten, promotes wetting by removing existing oxide or other detrimental films from the surfaces to be joined and prevents their re-formation during the joining operation

3.2.3
binder
substance with which filler metals and/or fluxes are bound as powders or pastes so that they can be applied to the joint as paste or can be moulded into filler metal shapes

3.2.4
soldering and brazing stop-off
substance used to prevent undesirable spreading of molten filler metal

3.2.5
parent material
material being brazed/soldered

3.2.6
protective atmosphere for soldering or brazing
gas atmosphere or vacuum round a component, either to remove oxide or other detrimental films on the surfaces to be joined or to prevent the re-formation of such films on surfaces which have previously been cleaned

3.2.6.1
reducing gas atmosphere
gas which reduces oxides owing to its high affinity for oxygen

3.2.6.2
inert gas atmosphere
gas which prevents the formation of oxides during the soldering or brazing process

© ISO 2005 – All rights reserved
Documents
Document Sharing Hub
Copyright International Organization for Standardization
Reproduced by IHS under license with ISO
No reproduction or networking permitted without license from IHS
Not for Resale
Full document details: ISO 857-2-2005

3.2.6.3
vacuum
pressure sufficiently below atmospheric so that the formation of oxides will be prevented to a degree sufficient for satisfactory soldering or brazing, because of the low partial pressure of the residual gas

NOTE As a vacuum can only eliminate oxides to a very limited extent, preparatory cleaning of the surfaces to be wetted is of the greatest importance.

3.3
process conditions

3.3.1
characteristic temperatures

3.3.1.1
melting temperature range of the filler metal
temperature range extending from the commencement of melting (solidus temperature) to complete liquefaction (liquidus temperature)

NOTE Some filler metals have a melting point rather than a melting range.

3.3.1.2
soldering or brazing temperature
temperature at the joint where the filler metal wets the surface or where a liquid phase is formed by boundary diffusion and there is sufficient material flow

NOTE With some filler metals, this is below the liquidus temperature of the filler metal.

3.3.1.3
equalizing temperature
preheating temperature
temperature at which the components being joined are held so that they are uniformly heated through

NOTE It is lower than the solidus temperature of the filler metal.

3.3.1.4
effective temperature range
temperature range within which a flux or a protective atmosphere is effective

3.3.2
characteristic times

3.3.2.1
soldering or brazing time
time period for the soldering or brazing cycle

3.3.2.2
heating time
time during which the soldering or brazing temperature is reached

NOTE It includes the equalizing (preheating) time and can also include other times, e.g. the degassing time.

3.3.2.3
equalizing time
preheating time
time during which the components to be soldered or brazed are held at the equalizing/preheating temperature

3.3.2.4
holding time
time during which the joint is kept at the soldering or brazing temperature

© ISO 2005 – All rights reserved

Documents
Document Sharing Hub
Copyright International Organization for Standardization
Reproduced by IHS under license with ISO
No reproduction or networking permitted without license from IHS
Not for Resale
Full document details: ISO 857-2-2005

3.3.2.5
cooling time
time during which the joint cools down from the soldering or brazing temperature to ambient temperature

NOTE It can include the time necessary for the post heat treatment of the soldered or brazed parts.

3.3.2.6
total time
period which includes the heating time, the holding time and the cooling time

3.3.2.7
effective time
time during which the flux remains effective during the soldering or brazing operation

NOTE It is dependent on the procedure used.

3.4
soldering or brazing geometry

3.4.1
closed joint
joint in which the gap is filled principally by capillary action with filler metal, i.e. either a butt joint or a lap joint between parallel faces of the components to be soldered or brazed

NOTE 1 See Figures 1 and 2.

NOTE 2 The lap width and length determine the area over which the components will be joined.

NOTE 3 For soldering/brazing with radiation and soldering/brazing with an electric arc, mixtures of joint types, i.e. butt weld at raised edge or butt weld at lap joint, are also possible.

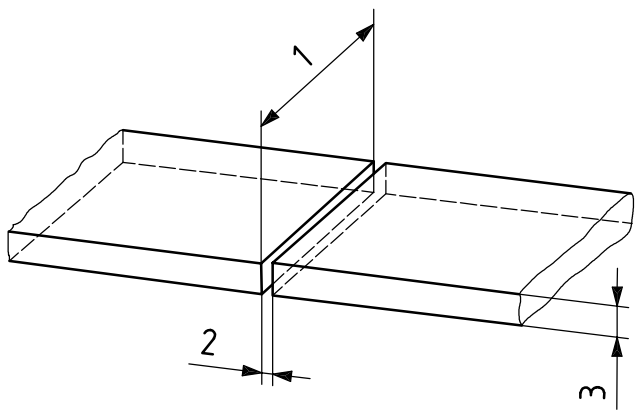

Key
1 closed joint length
2 closed joint width (assembly gap)
3 component thickness

Figure 1 — Closed butt joint

Copyright International Organization for Standardization
Reproduced by IHS under license with ISO
No reproduction or networking permitted without license from IHS
Full document details: ISO 857-2-2005
Not for Resale
Documents
Document Sharing Hub
© ISO 2005 – All rights reserved

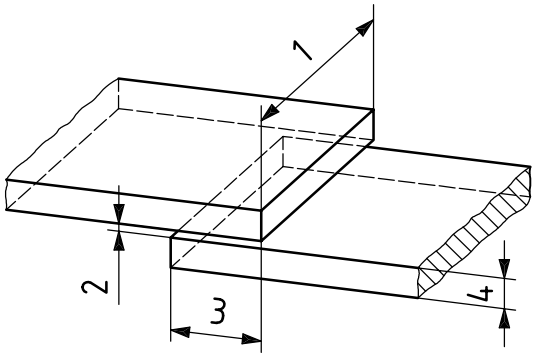

Key

1 closed joint length

2 closed joint width (assembly gap)

3 lap length

4 component thickness

Figure 2 — Closed lap joint

3.4.2
open joint
joint in which the gap is filled with filler metal by gravity

NOTE 1 See Figure 3, which shows two components with parallel faces prepared for soldering or brazing.

NOTE 2 This process is often described as braze welding.

NOTE 3 For soldering/brazing with radiation and soldering/brazing with an electric arc, mixtures of joint types, i.e. butt weld at raised edge or butt weld at lap joint, are also possible.

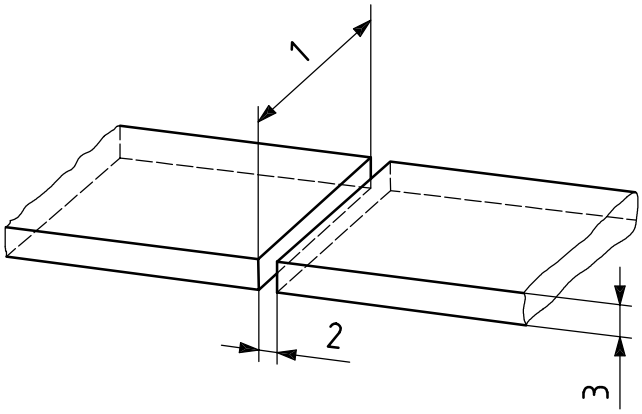

Key

1 open joint length

2 open joint width (assembly gap)

3 component thickness

Figure 3 — Open butt joint (square butt joint)

3.4.3
soldering or brazing gap
narrow, mainly parallel gap between the components to be soldered or brazed, measured at the soldering or brazing temperature

--`,,```,,,,````-`-`,,`,,`,`,,`---
Documents
Document Sharing Hub

© ISO 2005 – All rights reserved

Copyright International Organization for Standardization
Reproduced by IHS under license with ISO
No reproduction or networking permitted without license from IHS
Not for Resale
Full document details: ISO 857-2-2005