INTERNATIONAL STANDARD

ISO 8579-1

Second edition
2002-08-01

Acceptance code for gear units —

Part 1: Test code for airborne sound

Code de réception des engrenages sous carter —

Partie 1: Code d'essai pour la détermination du bruit aérien

Reference number
ISO 8579-1:2002(E)

© ISO 2002

Documents
Document Sharing Hub

Copyright International Organization for Standardization
Provided by IHS under license with ISO
No reproduction or networking permitted without license from IHS
Not for Resale
Full document details: ISO 8579-1-2002

PDF disclaimer

This PDF file may contain embedded typefaces. In accordance with Adobe's licensing policy, this file may be printed or viewed but shall not be edited unless the typefaces which are embedded are licensed to and installed on the computer performing the editing. In downloading this file, parties accept therein the responsibility of not infringing Adobe's licensing policy. The ISO Central Secretariat accepts no liability in this area.

Adobe is a trademark of Adobe Systems Incorporated.

Details of the software products used to create this PDF file can be found in the General Info relative to the file; the PDF-creation parameters were optimized for printing. Every care has been taken to ensure that the file is suitable for use by ISO member bodies. In the unlikely event that a problem relating to it is found, please inform the Central Secretariat at the address given below.

© ISO 2002

All rights reserved. Unless otherwise specified, no part of this publication may be reproduced or utilized in any form or by any means, electronic or mechanical, including photocopying and microfilm, without permission in writing from either ISO at the address below or ISO's member body in the country of the requester.

ISO copyright office
Case postale 56 • CH-1211 Geneva 20
Tel. + 41 22 749 01 11
Fax + 41 22 749 09 47
E-mail copyright@iso.ch
Web www.iso.ch

Printed in Switzerland

Documents
Document Sharing Hub
© ISO 2002 – All rights reserved

Copyright International Organization for Standardization
Provided by IHS under license with ISO
No reproduction or networking permitted without license from IHS
Not for Resale
Full document details: ISO 8579-1-2002

Contents

Page

Foreword iv
Introduction v
1 Scope 1
2 Normative references 1
3 Terms and definitions 2
4 Gear configuration and acoustic environment 2
5 Sound power level determination 3
6 Determination of emission sound pressure level 16
7 Installation and mounting conditions 17
8 Operating conditions during sound measurements 18
9 Information to be recorded 19
10 Information to be reported 19
11 Declaration and verification of sound emission values 19
Annex A (informative) **Examples of microphone positions on the measurement surface for different gear types and sizes** 20
Annex B (informative) **Typical sound levels for different gear types and sizes (sound power and sound pressure)** 29
Annex C (informative) **Information for the determination of airborne sound power levels using the methods of ISO 3744:1981 and ISO 3746:1979** 44
Bibliography 53

© ISO 2002 – All rights reserved

Documents
Document Sharing Hub
Copyright International Organization for Standardization
Provided by IHS under license with ISO
No reproduction or networking permitted without license from IHS
Not for Resale
Full document details: ISO 8579-1-2002

Foreword

ISO (the International Organization for Standardization) is a worldwide federation of national standards bodies (ISO member bodies). The work of preparing International Standards is normally carried out through ISO technical committees. Each member body interested in a subject for which a technical committee has been established has the right to be represented on that committee. International organizations, governmental and non-governmental, in liaison with ISO, also take part in the work. ISO collaborates closely with the International Electrotechnical Commission (IEC) on all matters of electrotechnical standardization.

International Standards are drafted in accordance with the rules given in the ISO/IEC Directives, Part 3.

The main task of technical committees is to prepare International Standards. Draft International Standards adopted by the technical committees are circulated to the member bodies for voting. Publication as an International Standard requires approval by at least 75 % of the member bodies casting a vote.

Attention is drawn to the possibility that some of the elements of this part of ISO 8579 may be the subject of patent rights. ISO shall not be held responsible for identifying any or all such patent rights.

ISO 8579-1 was prepared by Technical Committee ISO/TC 60, *Gears*.

This second edition cancels and replaces the first edition (ISO 8579-1:1993), which has been technically revised.

ISO 8579 consists of the following parts, under the general title *Acceptance code for gear units*:

— *Part 1: Test code for airborne sound*

— *Part 2: Determination of mechanical vibrations of gear units during acceptance testing*

Annexes A, B and C of this part of ISO 8579 are for information only.

© ISO 2002 – All rights reserved

Copyright International Organization for Standardization
Provided by IHS under license with ISO
No reproduction or networking permitted without license from IHS
Not for Resale
Full document details: ISO 8579-1-2002

Introduction

The sound emitted by a gear unit or gearmotor can be radiated by the casing of the gear unit, the driving system (e.g. motor, coupling, another gear unit), and the connected structures included in the gear-drive system.

On-site and on the shop test stand, the perceived sound can be significantly increased by reverberation effects or by the radiation of extraneous sources.

Depending on the type of gear unit or gearmotor, as well as on the requirement of the purchaser, it may be necessary for the manufacturer or supplier to know

a) the sound emitted by the gear unit, excluding the sound from the driver/motor, driven system and transmission elements,

b) the sound emitted by the gearmotor, including the motor and the transmission elements,

c) the sound emitted by subsystems or auxiliaries, for example, the lubrication system, and

d) the sound emitted by each of those elements in respect of a given requirement, or in view of an efficient sound-proofing of the installation.

This part of ISO 8759 describes methods for the determination of the sound emitted by a gear unit alone, a gearmotor or a gear-drive system. Sound emission is expressed in terms of the sound power level of the transmission system and the emission sound pressure level at the relevant work station (see 6.2).

Annex A provides examples of practical microphone positions on the measurement plane for different gear types and sizes. Annex B gives typical sound-pressure and sound power levels for different gear types and sizes. Annex C, developed for ISO 8579-1:1993, provides information on the determination of airborne sound power levels emitted by gear units, using a combination of the two methods given in clause 5.

© ISO 2002 – All rights reserved

Documents
Document Sharing Hub
Copyright International Organization for Standardization
Provided by IHS under license with ISO
No reproduction or networking permitted without license from IHS
Not for Resale
Full document details: ISO 8579-1-2002

Documents
Document Sharing Hub
Copyright International Organization for Standardization
Provided by IHS under license with ISO
No reproduction or networking permitted without license from IHS
Not for Resale
Full document details: ISO 8579-1-2002

Acceptance code for gear units —

Part 1:
Test code for airborne sound

1 Scope

This part of ISO 8579 specifies the instructions and standardized conditions necessary for the determination of the airborne sound emission of gear units and gearmotors. It also specifies the allowed measurement methods, together with the operating and mounting conditions used for the test.

The emission characteristics include emission sound pressure levels at specified positions and the sound power level. The determination of these quantities is necessary for

a) manufacturers of gear units or gearmotors, in order that they may be able to declare the emitted sound,

b) for comparing the sound emitted by gear units and gearmotors under service operation, and

c) for the purpose of noise control at the design stage.

This part of ISO 8579 has the aim of ensuring, with its use, the reproducibility of the determination of the airborne sound emission characteristics within specified limits determined by the grade of accuracy of the basic measurement method used. The sound measurement methods allowed by this part of ISO 8579 are engineering methods (grade 2) and survey methods (grade 3).

2 Normative references

The following normative documents contain provisions which, through reference in this text, constitute provisions of this part of ISO 8579. For dated references, subsequent amendments to, or revisions of, any of these publications do not apply. However, parties to agreements based on this part of ISO 8579 are encouraged to investigate the possibility of applying the most recent editions of the normative documents indicated below. For undated references, the latest edition of the normative document referred to applies. Members of ISO and IEC maintain registers of currently valid International Standards.

ISO 3743-1:1994, *Acoustics — Determination of sound power levels of noise sources — Engineering methods for small, movable sources in reverberant fields — Part 1: Comparison method for hard-walled test rooms*

ISO 3744:1994, *Acoustics — Determination of sound power levels of noise sources using sound pressure — Engineering method in an essentially free field over a reflecting plane*

ISO 3745:—[1)], *Acoustics — Determination of sound power levels of noise sources using sound pressure — Precision methods for anechoic and semi-anechoic rooms*

ISO 3746:1995, *Acoustics — Determination of sound power levels of noise sources using sound pressure — Survey method using an enveloping measurement surface over a reflecting plane*

1) To be published. (Revision of ISO 3745:1977)

© ISO 2002 – All rights reserved

Documents
Document Sharing Hub
Copyright International Organization for Standardization
Provided by IHS under license with ISO
No reproduction or networking permitted without license from IHS
Not for Resale
Full document details: ISO 8579-1-2002

ISO 4871:1996, *Acoustics — Declaration and verification of noise emission values of machinery and equipment*

ISO/TR 7849:1987, *Acoustics — Estimation of airborne noise emitted by machinery using vibration measurement*

ISO 9614-1:1993, *Acoustics — Determination of sound power levels of noise sources using sound intensity — Part 1: Measurement at discrete points*

ISO 9614-2:1996, *Acoustics — Determination of sound power levels of noise sources using sound intensity — Part 2: Measurement by scanning*

ISO 11203:1995, *Acoustics — Noise emitted by machinery and equipment — Determination of emission sound pressure levels at a work station and at other specified positions from the sound power level*

3 Terms and definitions

For the purposes of this part of ISO 8579, the terms and definitions given in ISO 3743-1, ISO 3744, ISO 3745, ISO 3746, ISO 4871, ISO 9614-1, ISO 9614-2 and ISO 11203 apply.

4 Gear configuration and acoustic environment

4.1 Gear configuration

This part of ISO 8579 is concerned with industrial gear units and gearmotors with gearing of the cylindrical, bevel and worm types.

There are three gear configurations to be considered:

a) gear unit, independent of driving or driven systems;

b) gearmotor, with motor integral to the gear unit;

c) gear-drive system, where the motor or driving equipment is installed on a common baseplate with other required auxiliary equipment.

The purchaser and manufacturer shall agree on whether sound is to be measured on the system or on the gear unit alone.

Safety guards, such as cardan and coupling guards, and insulation hoods, where applicable, shall be present during the sound emission determination.

4.2 Acoustic environments

This part of ISO 8579 allows for three possible acoustic environments for each configuration. In each case, the gear configuration may be installed

— on-site (see 7.2.4),

— on the shop test stand (see 7.2.3), or

— in a specific facility intended for acoustic measurements (see 7.2.2).

© ISO 2002 – All rights reserved
Copyright International Organization for Standardization
Provided by IHS under license with ISO
No reproduction or networking permitted without license from IHS
Not for Resale
Full document details: ISO 8579-1-2002

5 Sound power level determination

5.1 General

Unless otherwise specified, the determination shall be an A-weighted sound power, with the testing being conducted in the manufacturer's test facility using the method chosen by the manufacturer.

5.2 Methods

In determining the method to be used, the grade of accuracy of the measurement must be considered. Each ISO standard method gives specific uncertainty limits for the grades, with grade 2 being more precise than grade 3. A typical example, taken from ISO 9614-2:1996, is given in Table 1.

Table 1 — Uncertainty in the determination of sound power levels

Octave band centre frequencies Hz	One-third octave band centre frequencies Hz	Standard deviations s Engineering (grade 2) dB	 Survey (grade 3) dB
63 to 125	50 to 160	3	—
250	200 to 315	2	—
500 to 4 000	400 to 5 000	1,5	—
—	6 300	2,5	—
A-weighted [a]	—	1,5 [b]	4

NOTE The stated uncertainty of the A-weighted estimate does not apply if the total A-weighted power in the one-third-octave bands outside the range 400 Hz to 5 000 Hz exceeds the total within this range; individual uncertainties then apply.

[a] 63 Hz to 4 kHz or 50 Hz to 6,3 kHz.

[b] The true value of the A-weighted sound power level is expected with a certainty of 95 % to be in the range of ± 3dB about the measured value.

The preferred methods for determining the sound power level are the following grade 2 accuracy methods:

— ISO 3743-1;

— ISO 3744;

— ISO 9614-1 or ISO 9614-2.

If it has been shown that grade 2 cannot be attained, then one of the following grade 3 methods may be used:

— ISO 3746;

— ISO 9614-1 or ISO 9614-2.

If none of the above methods are practicable, the method of ISO/TR 7849 may be used.

For selection of a basic standard for the determination of the sound power level of an industrial gear unit or gearmotor, use Table 2 or Table 3.

The differences between Tables 2 and 3 reflect the relative ease of performing measurements for gear units as opposed to gearmotors. Table 2 addresses gear units and gear-drive systems, which are an assembly of components and thus present a more challenging measurement procedure. Table 3 represents the relatively more

© ISO 2002 – All rights reserved

Documents
Document Sharing Hub
Copyright International Organization for Standardization
Provided by IHS under license with ISO
No reproduction or networking permitted without license from IHS
Not for Resale
Full document details: ISO 8579-1-2002

easily achieved measurements for a “close-coupled” gearmotor configuration where the sound of the gear unit is not separated from the sound of the motor. The term “gearmotor” may also include other close-coupled arrangements where the sound cannot be separated. This would include close-coupled gears and generators and close-coupled hydraulic motors.

NOTE **Comments on recommended International Standards**

ISO 3743-1 is based upon a hard-walled room and low background noise. This International Standard gives specifications for sound pressure measurement in octave bands in order to enable the sound power level to be calculated.

ISO 3744 is based upon a non-reverberant environment and low background noise. This International Standard specifies a method for calculating the sound power level from the measured A-weighted sound pressure level or the sound pressure level in octave or one-third octave bands.

ISO 3745 is based upon a special anechoic or semi-anechoic test room. This International Standard gives specifications for A-weighted sound pressure level measurement in order to enable the sound power level to be calculated.

ISO 3746 is less demanding. It gives specifications for the A-weighted sound pressure level only and provides an A-weighted sound power level with grade 3 accuracy.

ISO 9614 can be used in all environments, including, to a large extent, reverberation and extraneous sound sources. It gives specifications to sound intensity and sound pressure measurements. Depending on the level of the reverberation and extraneous sound, it provides the sound power level either as an A-weighted, overall level or in octave bands. For grade 3 measurements only, the overall A-weighted sound power level is available.

ISO 9614-1 requires measurements of sound intensity and, simultaneously, of sound pressure (at discrete points). In this case, the number of points is generally higher than the number of points used for the standards based on sound pressure measurements.

ISO 9614-2 requires measurement of sound intensity and, simultaneously, of sound pressure by scanning. This could be made on a partial or global surface, depending on the configuration of the machine. The method generally reduces the measurement time.

ISO/TR 7849 is an ISO Technical Report which is used only when the other methods are impracticable. This method is based upon measurement of vibration velocity of the relevant parts of the gear unit or gearmotor. It provides an estimation of the A-weighted sound power level or sound power level in octave, or one-third octave, bands.

5.3 Reference box, measurement surface, microphone positions and intensity probe considerations

5.3.1 General

When either ISO 3744, ISO 3746, ISO 9614-1 or ISO 9614-2 is used, 5.3.2 to 5.3.4 are applicable.

5.3.2 Reference box

The reference box is a hypothetical surface, generally the smallest simple volume (parallelepiped or box) containing the gear unit or gearmotor to be measured, but excluding auxiliaries, transmission elements and the driver for the gear unit. The reference box for a gear-drive system would just include the structure supplied by the gear-drive manufacturer. The box encloses the source and terminates on the reflecting plane (hard ground or water). Examples of reference boxes are shown in Figures 1, 2 and 3.

NOTE Small components of the source, which do not contribute to the sound radiation, can lie outside the reference box.

© ISO 2002 – All rights reserved
Copyright International Organization for Standardization
Provided by IHS under license with ISO
No reproduction or networking permitted without license from IHS
Not for Resale
Full document details: ISO 8579-1-2002

Table 2 — Standard selection for sound power level determination of gear units and gear-drive systems

Acoustic environment	Grade of accuracy	Standard for sound power level determination		
		Gear unit or gear drive system input power level, kW		
		⩾ 0,1 to ⩽ 10	> 10 to ⩽ 300	> 300
Specific facility [a, b, c]	2	**ISO 3744** [d] **ISO 3743-1** [e] ISO 9614	**ISO 9614** ISO 3744 [d]	ISO 9614
Shop test stand [a]	2	**ISO 9614** [b]		impracticable
	3	**ISO 9614** ISO 3746 [f]		**ISO 9614**
On-site	2	**ISO 9614** [f, b]		impracticable
	3	**ISO 9614** [f] ISO 3746 [f, g]	**ISO 9614** [f] ISO/TR 7849 [h]	

NOTE 1 The standard written in **bold** letters is the preferred standard, to be used wherever practicable.

NOTE 2 For each measurement situation, the standard selection order of preference is indicated by the order of listing.

NOTE 3 ISO 9614 refers to either ISO 9614-1 or ISO 9614-2.

[a] The power available for test may not be sufficient to represent on-site conditions.

[b] The size of the gear unit may prevent proper measurement.

[c] ISO 3745 could be used for grade 2 accuracy in a specific facility.

[d] Normally requires an anechoic environment above a reflective plane.

[e] Normally requires a reverberant room.

[f] The background noise may be too erratic for proper measurement.

[g] There may not be sufficient access between units for measurement.

[h] The time to make all the necessary measurements may be too extensive.

© ISO 2002 – All rights reserved
Copyright International Organization for Standardization
Provided by IHS under license with ISO
No reproduction or networking permitted without license from IHS
Not for Resale
Full document details: ISO 8579-1-2002
Documents
Document Sharing Hub

Table 3 — Standard selection for sound power level determination of gearmotors

Acoustic environment	Grade of accuracy	Standard for sound power level determination	
		Gearmotor rated power level, kW	
		⩾ 0,1 to ⩽ 300	> 300
Specific facility [a, b, c]	2	**ISO 3744** [d] ISO 9614	**ISO 9614** ISO 3744 [d]
Shop test stand [a]	2	**ISO 3744** [d] ISO 9614	**ISO 9614** [b]
	3	**ISO 3746** [e]	**ISO 9614** [b]
On-site [b]	2	ISO 9614 ISO 3744 [f]	**ISO 9614**
	3	**ISO 3746** [f] ISO 9614	**ISO 9614** ISO 3746 [f]

NOTE 1 The standard written in **bold** letters is the preferred standard, to be used wherever practicable.

NOTE 2 For each measurement situation, the standard selection order of preference is indicated by the order of listing.

NOTE 3 ISO 9614 refers to either ISO 9614-1 or ISO 9614-2.

[a] The power available for test may not be sufficient to represent on-site conditions.

[b] The size of the gear unit may prevent proper measurement.

[c] ISO 3745 could be used for grade 2 accuracy in a specific facility.

[d] Normally requires an anechoic environment above a reflective plane.

[e] Normally requires a reverberant room.

[f] The background noise may be too erratic for proper measurement.

5.3.3 Measurement surface

The measurement surface is a surface generally enveloping the reference box at a given distance.

The distance between the measurement surface and the reference box is called the measurement distance. It depends on the basic method used:

— for ISO 3744, based on a sound pressure level measurement, the distance, d, shall be 1 m;

— for ISO 9614, based on a sound intensity measurement, the distance, d, shall be

  — for ISO 9614-1, $d \geqslant 0{,}5$ m, and

  — for ISO 9614-2, $d \geqslant 0{,}2$ m.

For typical measurement surfaces, see Figures 1 to 3. Measurement surfaces terminate at reflecting planes, which lie at or within the measurement distance.

© ISO 2002 – All rights reserved
Copyright International Organization for Standardization
Provided by IHS under license with ISO
No reproduction or networking permitted without license from IHS
Not for Resale
Full document details: ISO 8579-1-2002
Documents
Document Sharing Hub

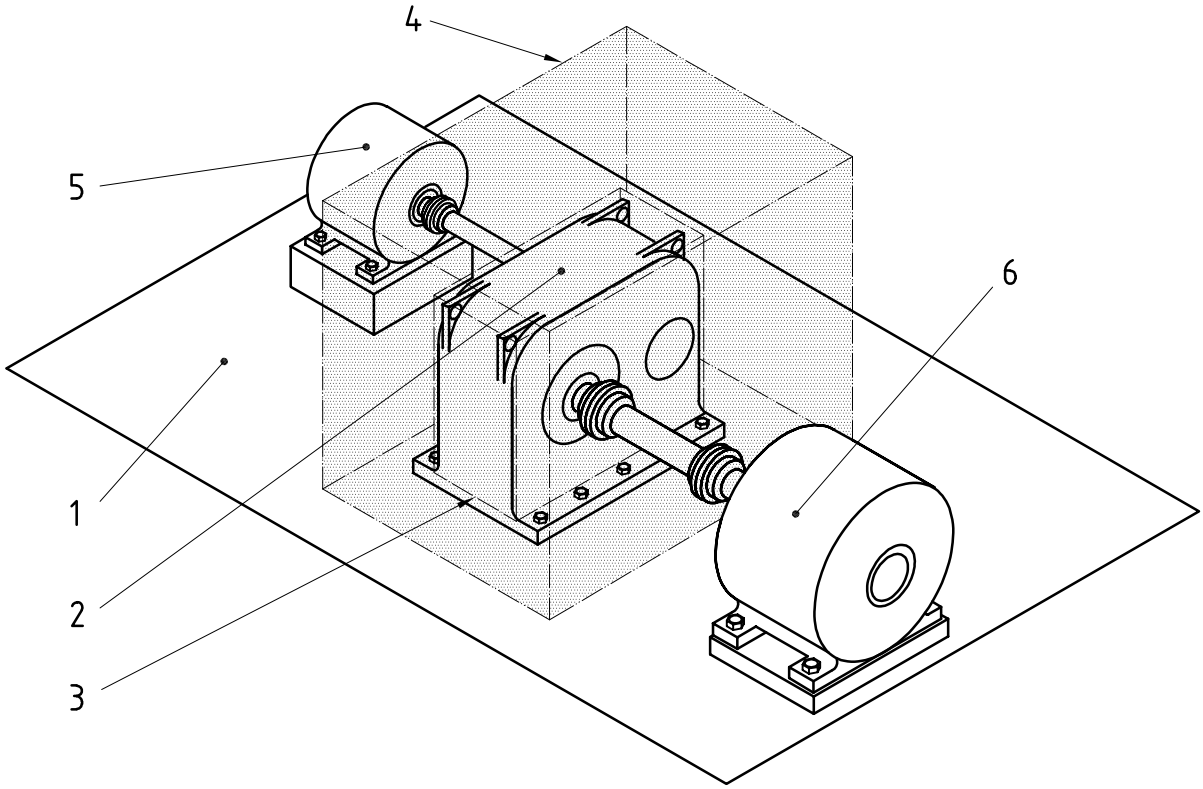

Key

1 Test floor
2 Gear unit
3 Reference box
4 Measurement surface
5 Motor
6 Load

Figure 1 — Reference box and measurement surface for gear unit

© ISO 2002 – All rights reserved
Copyright International Organization for Standardization
Provided by IHS under license with ISO
No reproduction or networking permitted without license from IHS
Not for Resale
Full document details: ISO 8579-1-2002

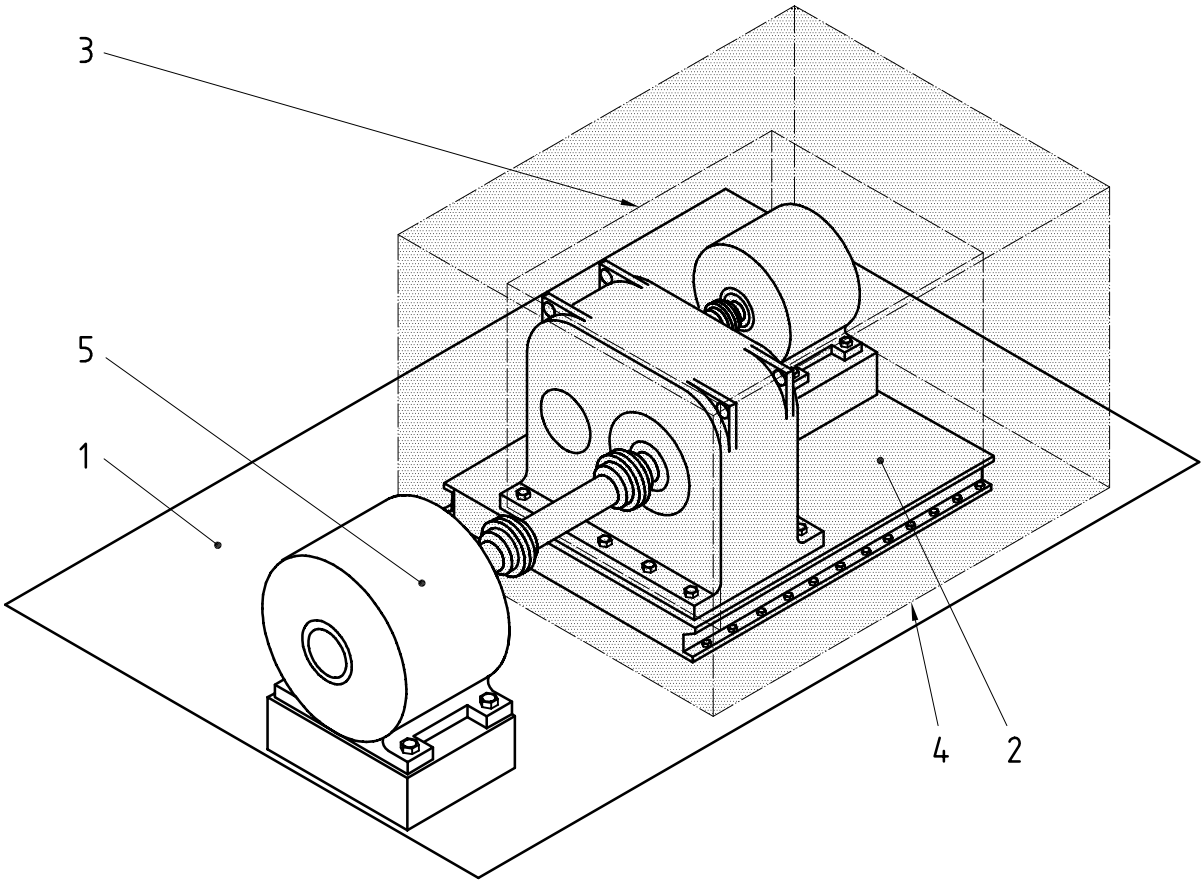

Key

1 Test floor
2 Gear unit
3 Reference box
4 Measurement surface
5 Load

Figure 2 — Reference box and measurement surface for gear-drive system

--`,,`,,`-`-`,,`,,`,`,,`---
Copyright International Organization for Standardization
Provided by IHS under license with ISO
No reproduction or networking permitted without license from IHS
Not for Resale
Full document details: ISO 8579-1-2002
Documents
Document Sharing Hub
© ISO 2002 – All rights reserved

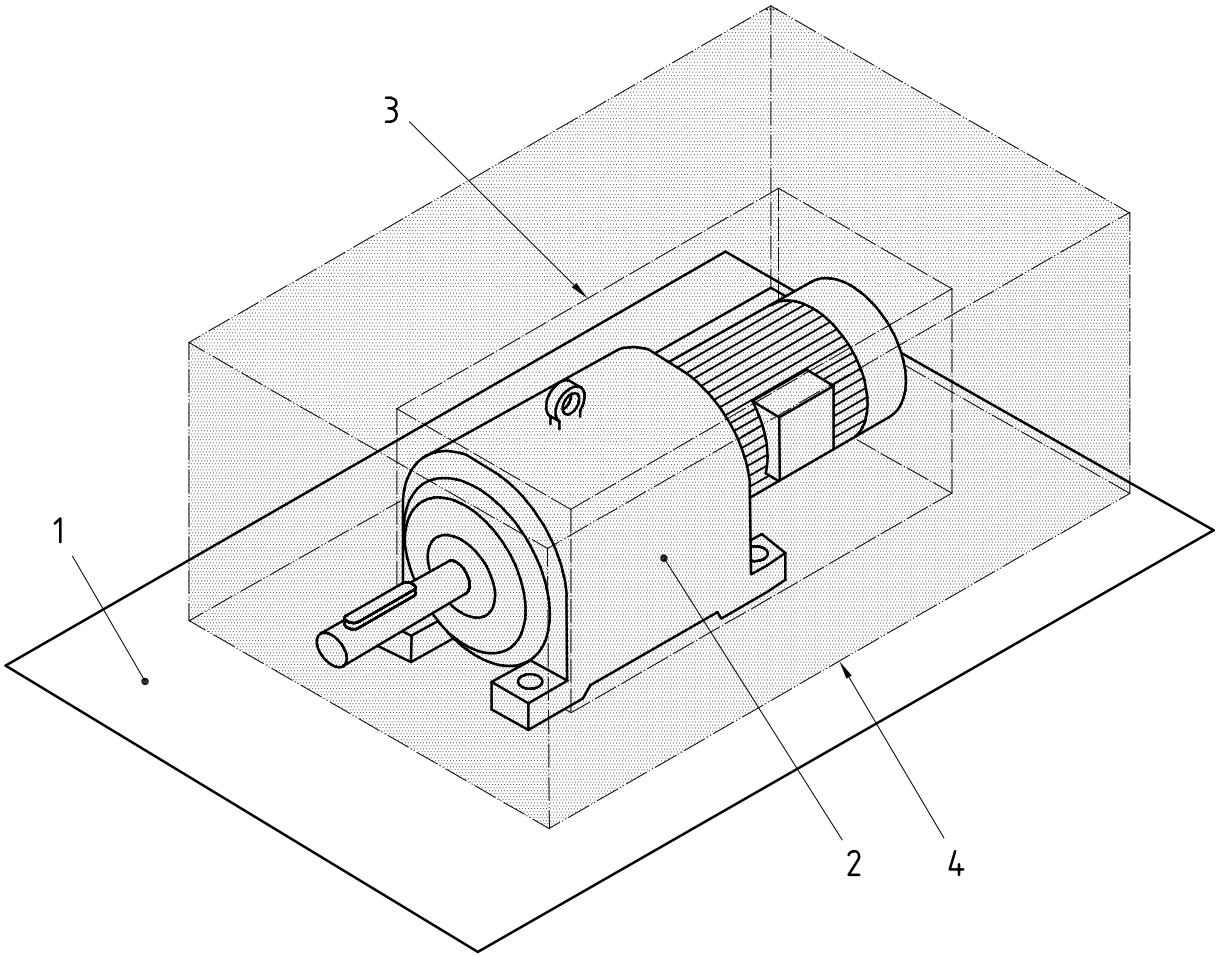

Key

1 Test floor

2 Gear unit

3 Reference box

4 Measurement surface

Figure 3 — Reference box and measurement surface for gearmotor

5.3.4 Position of microphones and intensity probes

The positions of the microphones and intensity probes on the measurement surface shall be those specified by the measurement standard used.

Typical microphone positions for sound pressure measurements are shown in Figures 4 to 11. The locations for intensity probes and the distance, d, may be different for intensity measurements.

Caution should be taken in selecting the proper positions of the microphones and intensity probes. They shall be chosen with care and should be appropriate for the arrangement of the machinery and location of walls or sound reflecting surfaces. Otherwise, the determined sound power may not accurately represent that radiated from the gear configuration only.

Additional examples of practical microphone positions for various types and sizes of gear are given in annex A.

© ISO 2002 – All rights reserved
Copyright International Organization for Standardization
Provided by IHS under license with ISO
No reproduction or networking permitted without license from IHS
Not for Resale
Full document details: ISO 8579-1-2002

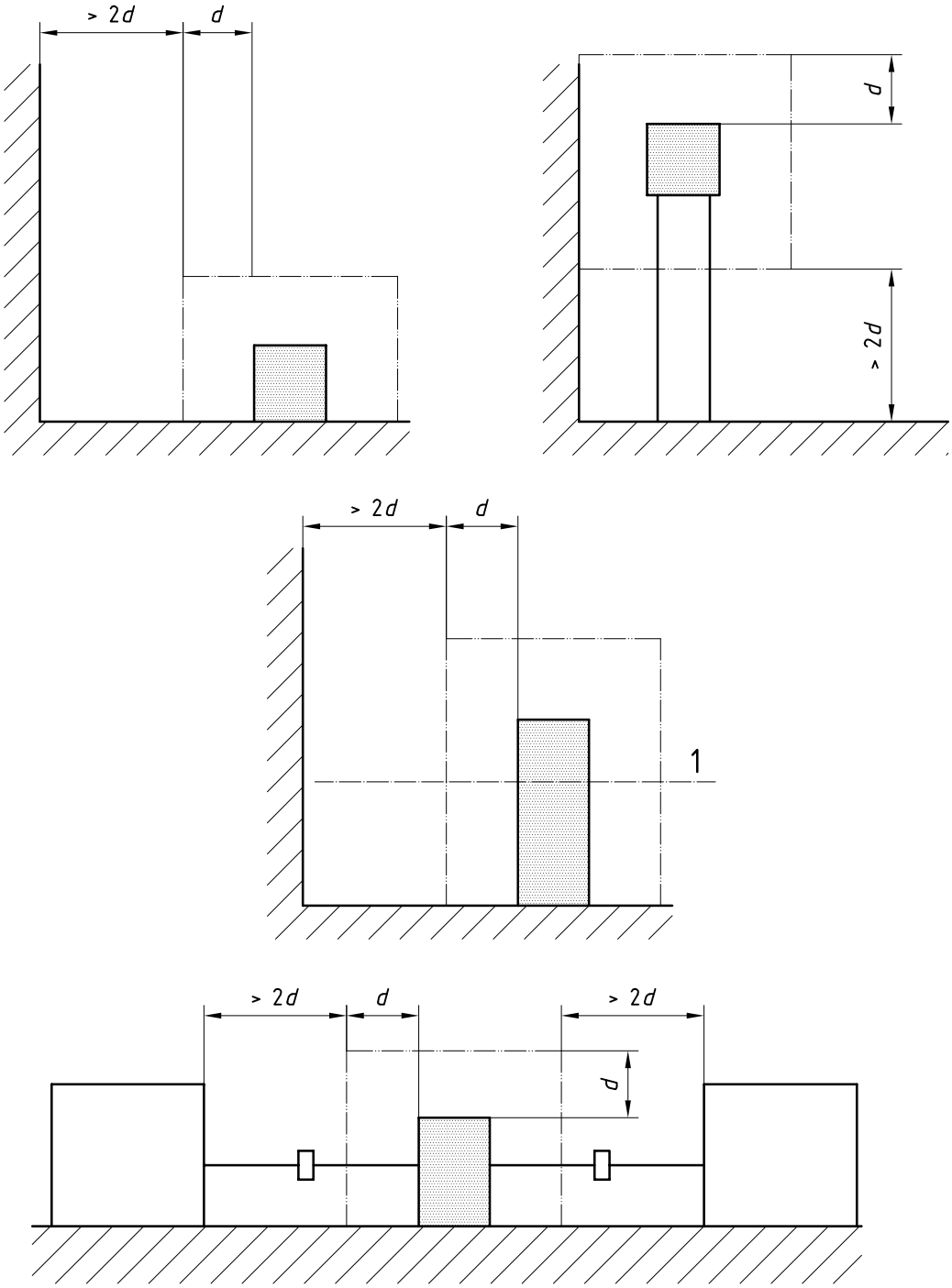

Key

1 Flooring grill

Figure 4 — Examples of machinery mounted on floor or by a wall

Copyright International Organization for Standardization
Provided by IHS under license with ISO
No reproduction or networking permitted without license from IHS
Not for Resale
Full document details: ISO 8579-1-2002
© ISO 2002 – All rights reserved

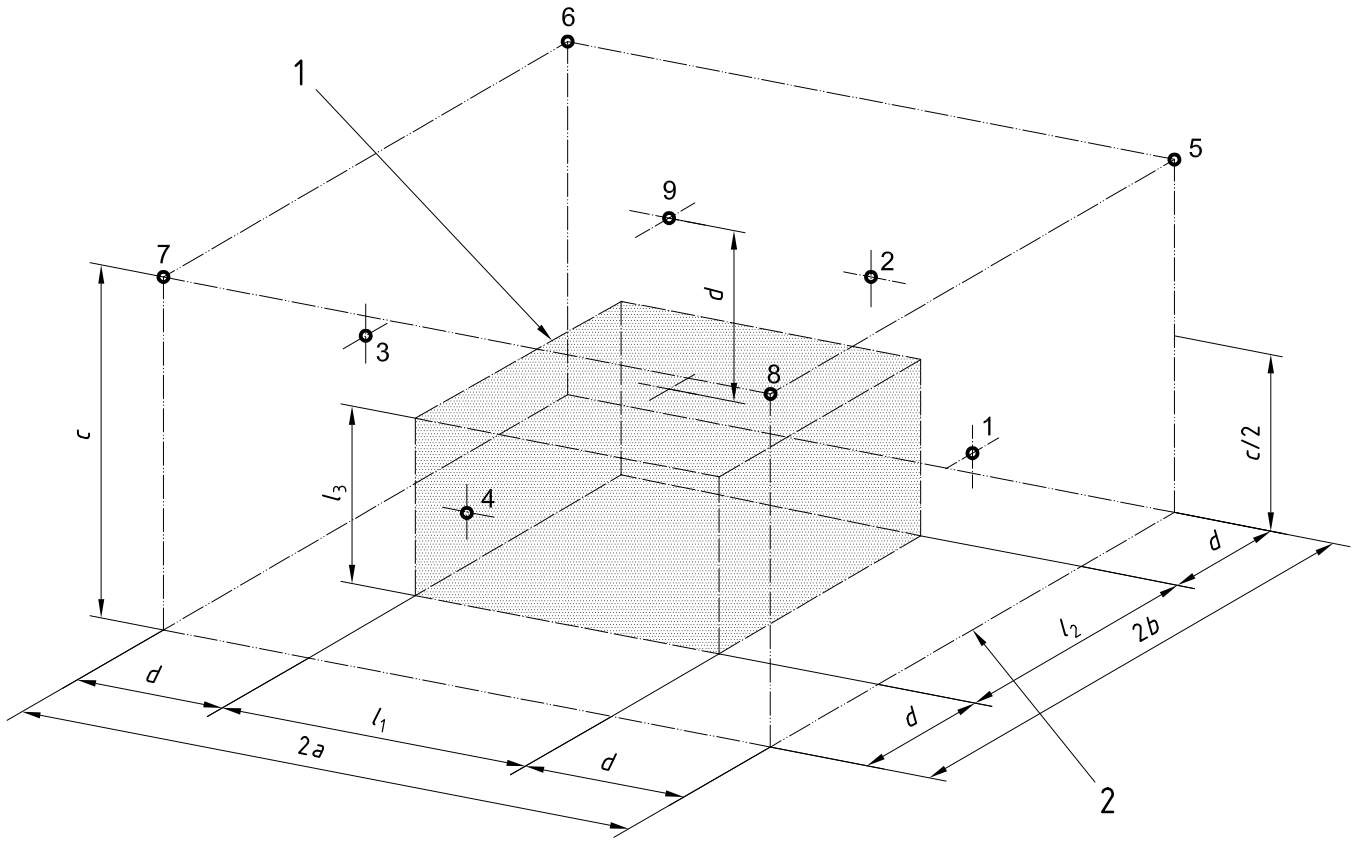

Key

1 Reference box

2 Measurement surface

Figure 5 — Measurement points arrangement for Figure 4

© ISO 2002 – All rights reserved
Copyright International Organization for Standardization
Provided by IHS under license with ISO
No reproduction or networking permitted without license from IHS
Not for Resale
Full document details: ISO 8579-1-2002

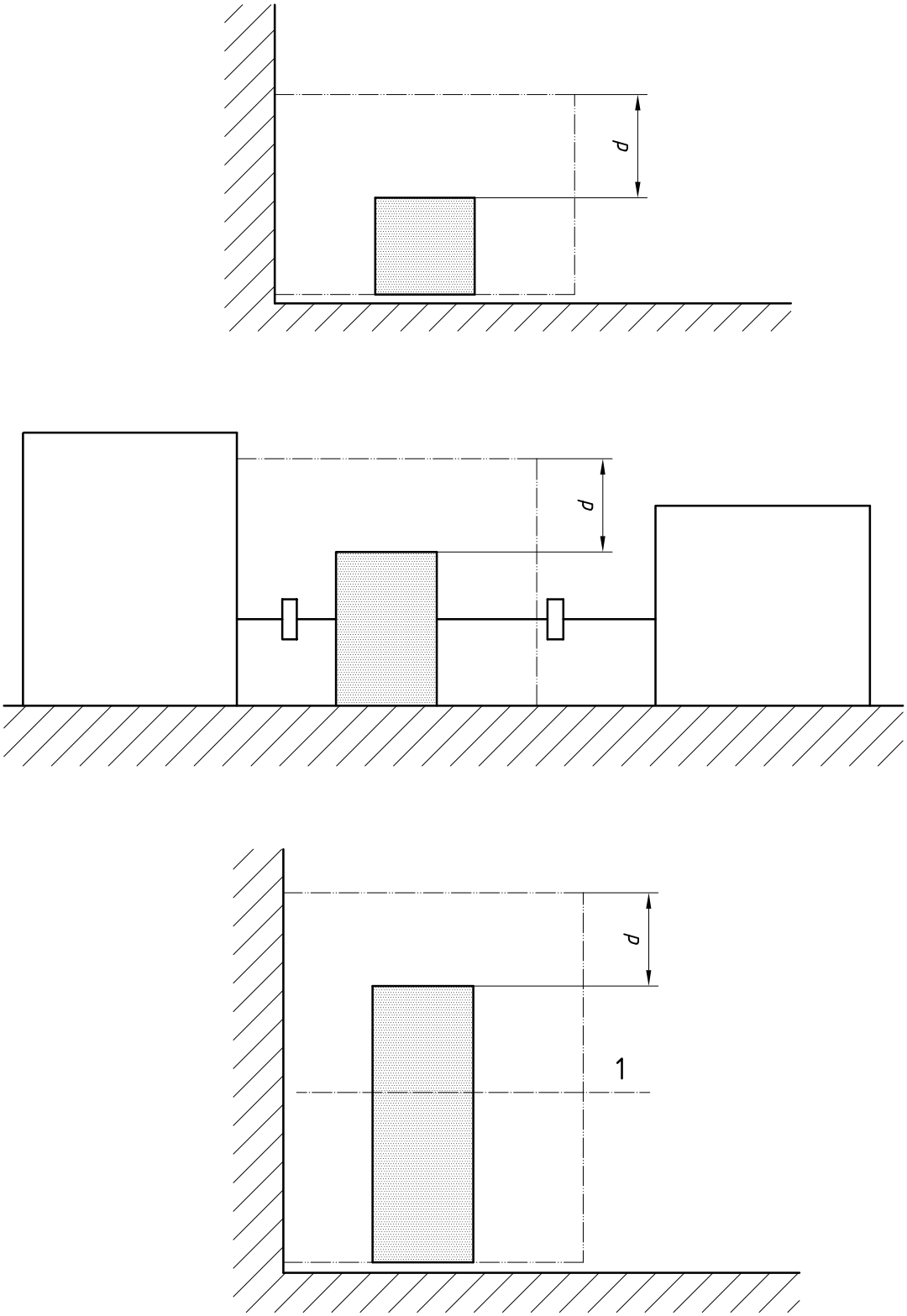

Key

1 Flooring grill

Figure 6 — Examples of machinery mounted on floor and near a wall

© ISO 2002 – All rights reserved
Copyright International Organization for Standardization
Provided by IHS under license with ISO
No reproduction or networking permitted without license from IHS
Not for Resale
Full document details: ISO 8579-1-2002
Documents
Document Sharing Hub