INTERNATIONAL STANDARD

ISO 9956-3

First edition
1995-09-01

Specification and approval of welding procedures for metallic materials —

Part 3:
Welding procedure tests for the arc welding of steels

Descriptif et qualification d'un mode opératoire de soudage pour les matériaux métalliques —

Partie 3: Épreuve de qualification d'un mode opératoire de soudage à l'arc sur acier

Reference number
ISO 9956-3:1995(E)

AVA Documents
Document Sharing Hub

Full document details: ISO 9956-3-1995

Contents

Page

1 Scope 1

2 Normative references 2

3 Definitions 2

4 Preliminary welding procedure specification (pWPS) 3

5 Welding procedure test 3

6 Test piece 3

6.1 General 3

6.2 Shape and dimensions of test pieces 3

6.3 Welding of test pieces 7

7 Examination and testing 7

7.1 Extent of testing 7

7.2 Location and cutting of test specimens 7

7.3 Nondestructive examination 8

7.4 Destructive tests 10

7.5 Re-testing 12

8 Range of approval 13

8.1 General 13

8.2 Related to the manufacturer 13

8.3 Related to the material 13

8.4 Common to all welding procedures 15

8.5 Specific to processes 16

9 Welding procedure approval record (WPAR) 17

Annexes

A Welding procedure approval record form (WPAR) 18

© ISO 1995
All rights reserved. Unless otherwise specified, no part of this publication may be reproduced or utilized in any form or by any means, electronic or mechanical, including photocopying and microfilm, without permission in writing from the publisher.

International Organization for Standardization
Case Postale 56 • CH-1211 Genève 20 • Switzerland
Printed in Switzerland

Documents
Document Sharing Hub
Full document details: ISO 9956-3-1995

B Types of steel according to the grouping system of table 3 **21**

Documents
Document Sharing Hub

Full document details: ISO 9956-3-1995

Foreword

ISO (the International Organization for Standardization) is a worldwide federation of national standards bodies (ISO member bodies). The work of preparing International Standards is normally carried out through ISO technical committees. Each member body interested in a subject for which a technical committee has been established has the right to be represented on that committee. International organizations, governmental and non-governmental, in liaison with ISO, also take part in the work. ISO collaborates closely with the International Electrotechnical Commission (IEC) on all matters of electrotechnical standardization.

Draft International Standards adopted by the technical committees are circulated to the member bodies for voting. Publication as an International Standard requires approval by at least 75 % of the member bodies casting a vote.

International Standard ISO 9956-3 was prepared by Technical Committee ISO/TC 44, *Welding and allied processes*, Subcommittee SC 10, *Unification of requirements in the field of metal welding*.

This part of ISO 9956 is the equivalent of European Standard EN 288-3.

ISO 9956 consists of the following parts, under the general title *Specification and approval of welding procedures for metallic materials*:

— *Part 1: General rules for fusion welding*

— *Part 2: Welding procedure specification for arc welding*

— *Part 3: Welding procedure tests for the arc welding of steels*

— *Part 4: Welding procedure tests for the arc welding of aluminium and its alloys*

— *Part 5: Approval by using approved welding consumables for arc welding*

— *Part 6: Approval related to previous experience*

— *Part 7: Approval by a standard welding procedure for arc welding*

— *Part 8: Approval by a pre-production welding test*

— *Part 10: Welding procedure specification for electron beam welding*

— *Part 11: Welding procedure specification for laser beam welding*

— *Part 12: Welding procedure test for arc welding of cast steels*

Annexes A and B of this part of ISO 9956 are for information only.

Documents
Document Sharing Hub
Full document details: ISO 9956-3-1995

Introduction

This part of ISO 9956 does not invalidate previous welding procedure approvals made to former national standards or specifications providing the intent of the technical requirements is satisfied and the previous procedure approvals are relevant to the application and production work on which they are to be employed.

Also, where additional tests have to be carried out to make the approval technically equivalent, it is only necessary to do the additional tests on a test piece which should be made in accordance with this part of ISO 9956.

Consideration of previous procedure approvals to former national standards or specifications should be agreed between the contracting parties at the time of the enquiry or contracting stage.

Documents
Document Sharing Hub

Full document details: ISO 9956-3-1995

Documents
Document Sharing Hub

Full document details: ISO 9956-3-1995

Specification and approval of welding procedures for metallic materials —

Part 3:
Welding procedure tests for the arc welding of steels

1 Scope

This part of ISO 9956 specifies how a welding procedure specification is approved by welding procedure tests.

It defines the conditions for the execution of welding procedure approval tests and the limits of validity of an approved welding procedure for all practical welding operations within the range of variables listed in clause 8.

It is intended that tests be carried out in accordance with this part of ISO 9956 unless more severe tests are specified by the relevant application standard or contract.

This part of ISO 9956 applies to the arc welding of steels. The principles of this part of ISO 9956 may be applied to other fusion welding processes subject to agreement between the contracting parties.

NOTE 1 Specific service, material or manufacturing conditions may require more comprehensive testing than is specified by this part of ISO 9956 in order to gain more information and to avoid repeating the welding procedure test at a later date just to obtain additional test data.

Such tests may include:

— longitudinal weld tensile test;

— all weld metal bend test;

— Charpy V-notch impact test;

— yield strength or 0,2 % proof stress;

— elongation;

— chemical analysis;

— micro examination;

— delta ferrite determination in austenitic stainless steels.

AVA Documents
Document Sharing Hub

Full document details: ISO 9956-3-1995

Arc welding is covered by the following processes in accordance with ISO 4063:

111 — metal-arc welding with covered electrode;

114 — flux-cored wire metal-arc welding without gas shield;

12 — submerged arc welding;

131 — metal-arc inert gas welding (MIG welding);

135 — metal-arc active gas welding (MAG welding);

136 — flux-cored wire metal-arc welding with active gas shield;

141 — tungsten inert gas arc welding (TIG welding);

15 — plasma arc welding;

other fusion welding processes by agreement e.g. metal cored wire arc welding.

2 Normative references

The following standards contain provisions which, through reference in this text, constitute provisions of this part of ISO 9956. At the time of publication, the editions indicated were valid. All standards are subject to revision, and parties to agreements based on this part of ISO 9956 are encouraged to investigate the possibility of applying the most recent editions of the standards indicated below. Members of IEC and ISO maintain registers of currently valid International Standards.

ISO 1106-1:1984, *Recommended practice for radiographic examination of fusion welded joints — Part 1: Fusion welded butt joints in steel plates up to 50 mm thick.*

ISO 1106-2:1985, *Recommended practice for radiographic examination of fusion welded joints — Part 2: Fusion welded butt joints in steel plates thicker than 50 mm and up to and including 200 mm in thickness.*

ISO 1106-3:1984, *Recommended practice for radiographic examination of fusion welded joints — Part 3: Fusion welded circumferential joints in steel pipes of up to 50 mm wall thickness.*

ISO 3452:1984, *Non-destructive testing — Penetrant inspection — General principles.*

ISO 4063:1990, *Welding, brazing, soldering and braze welding of metals — Nomenclature of processes and reference numbers for symbolic representation on drawings.*

ISO 4136:—[1], *Welding — Welded butt joints in metallic materials — Transverse tensile tests.*

ISO 5173:—[2], *Welding — Welded butt joints in metallic materials — Bend tests.*

ISO 5817:1992, *Arc-welded joints in steel — Guidance on quality levels for imperfections.*

ISO 6947:1990, *Welds — Working positions — Definitions of angles of slope and rotation.*

ISO 9015:—[3], *Welding — Welded joints in metallic materials — Hardness testing.*

ISO 9016:—[3], *Welding — Welded joints in metallic materials — Specimen location and notch orientation for impact tests.*

ISO 9606-1:1994, *Approval testing of welders — Fusion welding — Part 1: Steels.*

ISO 9956-1:1995, *Specification and approval of welding procedures for metallic materials — Part 1: General rules for fusion welding.*

ISO 9956-2:1995, *Specification and approval of welding procedures for metallic materials — Part 2: Welding procedure specification for arc welding.*

3 Definitions

For the purposes of this part of ISO 9956, the definitions given in ISO 9956-1 apply.

1) To be published. (Revision of ISO 4136:1989)

2) To be published. (Revision of ISO 5173:1981)

3) To be published.

AVA Documents Document Sharing Hub

Full document details: ISO 9956-3-1995

4 Preliminary welding procedure specification (pWPS)

The preliminary welding procedure specification shall be prepared in accordance with ISO 9956-2. It shall specify the range for all the relevant parameters.

5 Welding procedure test

The making and testing of test pieces representing the type of welding used in production shall be in accordance with clauses 6 and 7.

The welder who undertakes the welding procedure test satisfactorily in accordance with this part of ISO 9956 is approved for the appropriate range of approval given in the relevant part of ISO 9606.

6 Test piece

6.1 General

The welded assembly to which the welding procedure will relate in production shall be represented by making a standardized test piece or pieces, as specified in 6.2.

6.2 Shape and dimensions of test pieces

The test pieces shall be of a sufficient size to ensure a reasonable heat distribution.

Additional test pieces, or longer test pieces than the minimum size, may be prepared in order to allow for extra and/or for re-testing specimens (see 7.5).

If required by the application standard, the direction of plate rolling shall be marked on the test piece when impact tests are required to be taken in the heat affected zone (HAZ).

The thickness and/or pipe outside diameter of the test pieces shall be selected in accordance with 8.3.2.1 to 8.3.2.4.

Unless otherwise specified, the shape and minimum dimensions of the test piece shall be as follows.

NOTE 2 In figures 1 to 5, t is the thickness of the thicker component part.

6.2.1 Butt weld in plate

The test piece shall be in accordance with figure 1. The length of the test piece shall be such as to provide for the appropriate test specimens as given in table 1.

6.2.2 Butt weld in pipe

The test piece shall be in accordance with figure 2. When small pipe diameters are used, several test pieces may be necessary.

NOTE 3 The word "pipe", alone or in combination, is used to mean "pipe", "tube" or "hollow section".

6.2.3 T-butt joint

The test piece shall be in accordance with figure 3. The length of the test piece shall be such as to provide for the appropriate test specimens as given in table 1.

6.2.4 Branch connection

The test piece shall be in accordance with figure 4. The angle α is the minimum to be used in production.

A branch connection is considered as a fully penetrated joint (set-on or set-in or set-through joint).

6.2.5 Fillet weld

The test piece shall be in accordance with figure 4 or 5.

These may also be used with an edge preparation to give partial penetration.

AVA Documents
Document Sharing Hub

Full document details: ISO 9956-3-1995

© ISO

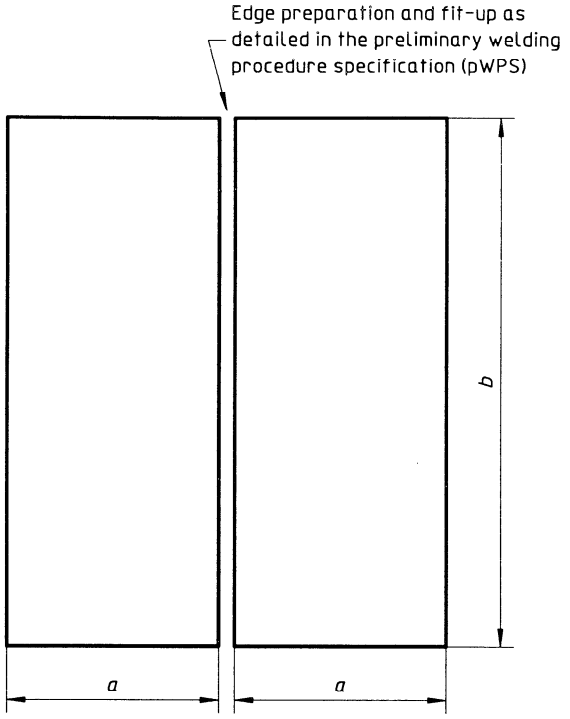

$a = 3t$ (150 mm min.)

$b = 6t$ (350 mm min.)

Figure 1 — Test piece for a butt weld in plate

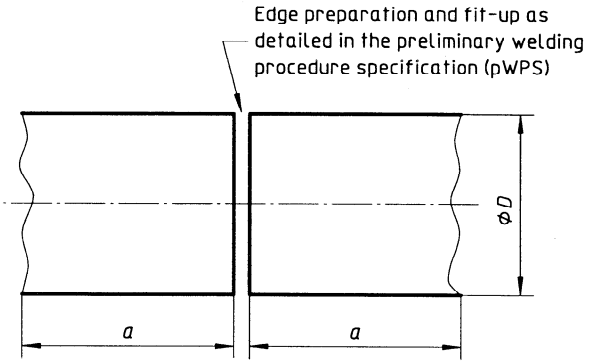

$a = 150$ mm min.

$D =$ outside diameter

Figure 2 — Test piece for a butt weld in pipe

Documents
Document Sharing Hub
Full document details: ISO 9956-3-1995

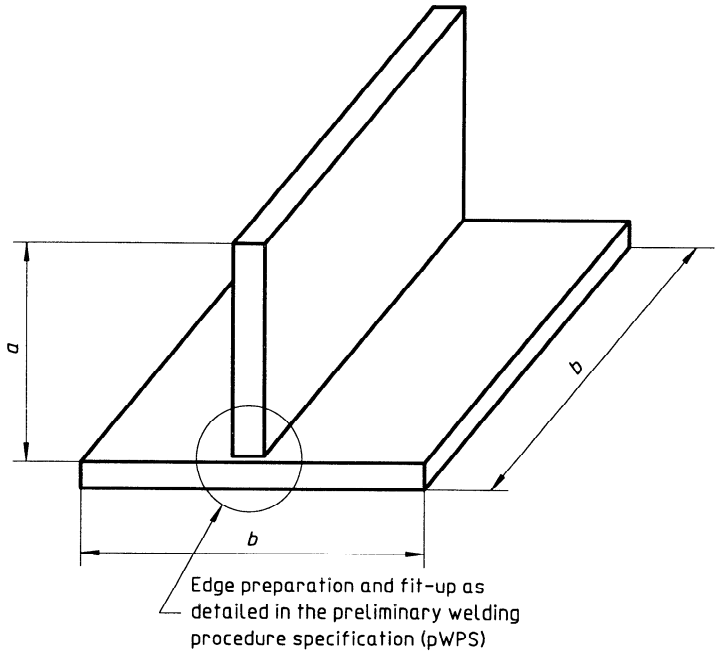

$a = 3t$ (150 mm min.)

$b = 6t$ (350 mm min.)

Figure 3 — Test piece for a T-butt joint

Documents
Document Sharing Hub
Full document details: ISO 9956-3-1995