INTERNATIONAL STANDARD

ISO/IEC 9314-5

First edition
1995-02-01

Information technology — Fibre Distributed Data Interface (FDDI) —

Part 5:
Hybrid Ring Control (HRC)

Technologies de l'information — Interface de données distribuées sur fibre (FDDI) —

Partie 5: Commande hybride par anneau (HRC)

Reference number
ISO/IEC 9314-5:1995(E)

AVA Documents
Document Sharing Hub

Full document details: ISO IEC 09314-5-1995

Contents

Foreword iv

1 Scope 1

2 Normative references 1

3 Definitions 2

4 Conventions and abbreviations 6
- 4.1 Conventions 6
- 4.2 Abbreviations 7

5 General description 8
- 5.1 Traffic types 9
- 5.2 Transmission facilities 9
- 5.3 Bandwidth management 11
- 5.4 Station structure 12

6 HRC services 16
- 6.1 PHY to H-MUX services 17
- 6.2 H-MUX to MAC services 18
- 6.3 H-MUX to P-MAC services 19
- 6.4 H-MUX to I-MAC services 21
- 6.5 H-MUX to SMT services 24
- 6.6 I-MAC to CS-MUX services 30
- 6.7 I-MAC to SMT services 32

7 Facilities 34
- 7.1 H-MUX symbol set 34
- 7.2 Cycle 34
- 7.3 HRC protocol parameters 38
- 7.4 Variables 39
- 7.5 Timers 42
- 7.6 Counters 43
- 7.7 Signals 43
- 7.8 Functions 44

8 Operation 44
- 8.1 Ring operation overview 44
- 8.2 Error recovery 50
- 8.3 Structure 53
- 8.4 Cycle acquisition 57
- 8.5 Cycle generation process 67
- 8.6 Cycle exchange process 84

© ISO/IEC 1995
All rights reserved. No part of this publication may be reproduced or utilized in any form or by any means, electronic or mechanical, including photocopying and microfilm, without permission in writing from the publisher.

International Organization for Standardization
Case postale 56 • CH-1211 Genève 20 • Switzerland
Printed in Switzerland

Documents
Document Sharing Hub

Full document details: ISO IEC 09314-5-1995

Annexes

A — Examples of the circuit-switch service class 86
B — FDDI station considerations 94
C — Isochronous call control procedures 99
D — Isochronous channel security 104
E — Isochronous bandwidth management 106
F — Logical ranking of monitors 108

Figures

Figure 1 — Structure of FDDI standards 3
Figure 2 — HRC cycle structure 8
Figure 3 — Hybrid mode traffic types 9
Figure 4 — Bandwidth management hierarchy 11
Figure 5 — Data flow through an FDDI-II monitor station 13
Figure 6 — Data flow through an FDDI-II non-monitor station 14
Figure 7 — Architectural block diagram of the H-MUX 14
Figure 8 — Architectural block diagram of the I-MAC 16
Figure 9 — H-MUX cycle structure at 100 Mbps 34
Figure 10 — H-MUX cycle header 35
Figure 11 — Example of wideband channel interleaving 37
Figure 12 — Example of wideband channel sorting 37
Figure 13 — H-MUX structure 54
Figure 14 — HRC receive state diagram 58
Figure 15 — WBC template filter state diagram 62
Figure 16 — HRC cycle control state diagram 68
Figure 17 — HRC cycle generate state diagram 76
Figure 18 — WBC template generation state diagram 83
Figure A.1 — Example of a byte interleave burst mode CS-MUX 87
Figure A.2 — Example of a bit interleave burst mode CS-MUX 88
Figure A.3 — Example of a bit interleave continuous mode CS-MUX 88
Figure A.4 — Example of 2048 kbps G.703/G.732 bridge and associated CS-MUX 90
Figure A.5 — Example FDDI-II to G.703/G.732 protocol layers 91
Figure B.1 — FDDI-II clock tolerance budget 96
Figure B.2 — Sinusoidal and triangular jitter waves 96
Figure B.3 — FDDI-II allowable input jitter vs. network maximum jitter 97
Figure C.1 — Isochronous channel reservation 100
Figure C.2 — Isochronous call establishment 101
Figure C.3 — Isochronous call released from destination station 102
Figure C.4 — Isochronous call released from originating station 102
Figure C.5 — Isochronous channel release 103

Documents
Document Sharing Hub
Full document details: ISO IEC 09314-5-1995

Foreword

ISO (the International Organization for Standardization) and IEC (the International Electrotechnical Commission) form the specialized system for worldwide standardization. National bodies that are members of ISO or IEC participate in the development of International Standards through the technical committees established by the respective organization to deal with particular fields of mutual interest. Other international organizations, governmental and non-governmental, in liaison with ISO and IEC, also take part in the work.

In the field of information technology, ISO and IEC have established a joint technical committee ISO/IEC JTC 1. Draft International Standards adopted by the joint technical committee are circulated to national bodies for voting. Publication as an International Standard requires approval by at least 75% of the national bodies casting a vote.

International Standard ISO/IEC 9314-5 was prepared by Joint Technical Committee ISO/IEC JTC 1, *Information technology,* Subcommittee SC 25, *Interconnection of information technology equipment.*

ISO/IEC 9314 consists of the following parts, under the general title *Information technology — Fibre Distributed Data Interface (FDDI):*

— *Part 1: Token Ring Physical Layer Protocol (PHY)*

— *Part 2: Token Ring Media Access Control (MAC)*

— *Part 3: Physical Layer, Medium Dependent (PMD)*

— *Part 5: Hybrid Ring Control (HRC)*

Annexes A to F of this part of ISO/IEC 9314 are for information only.

Documents
Document Sharing Hub

Full document details: ISO IEC 09314-5-1995

Information technology — Fibre Distributed Data Interface (FDDI) —

Part 5:
Hybrid Ring Control (HRC)

1 Scope

This part of ISO/IEC 9314 specifies a hybrid ring control (HRC) protocol which provides a mode of operation in which both packet switched and isochronous data are transmitted within the same special frame structure, called a cycle. HRC is designed to operate with the existing media access control (MAC), physical layer (PHY), and physical medium dependent (PMD) layers of the FDDI protocol.

The HRC is composed of the hybrid multiplexer (H-MUX) and the isochronous media access control (I-MAC) protocols. The H-MUX integrates packet and isochronous data into cycles which it transmits onto and receives from the medium using the services of the physical layer. The I-MAC provides separate transmission channels for the transfer of user isochronous data streams. The format, clocking and synchronization of cycles, and the operation and interfaces of the H-MUX and I-MAC are defined by this part of ISO/IEC 9314. These interfaces include the interface to the FDDI station management (SMT) protocol.

The HRC is designed to support various transmission rates, from 100 Mbps upwards, in increments of 6,144 Mbps. All transmission rate dependent parameters defined in this part of ISO/IEC 9314 assume a transmission rate of 100 Mbps.

Stations composed of FDDI and HRC entities are referred to as FDDI-II stations. The FDDI packet MAC (P-MAC) and the HRC components, and their architectural relationship to LLC and a circuit switching Multiplexer (CS-MUX) are illustrated in figure 1. This figure does not imply an implementation configuration

FDDI-II networks consist of FDDI-II stations. Interoperability between FDDI and FDDI-II stations on the same network is provided in HRC basic mode, which only supports packet transmission.

The set of FDDI standards, ISO/IEC 9314, specifies the interfaces, functions, and operations necessary to ensure interoperability between conforming FDDI implementations. This part of ISO/IEC 9314 specifies a hybrid ring control protocol: HRC. Conforming implementations may employ any design technique that does not violate interoperability.

2 Normative references

The following standards contain provisions which, through reference in this text, constitute provisions of this part of ISO/IEC 9314. At the time of publication, the editions indicated were valid. All standards are subject to revision, and parties to agreements based on this part of ISO/IEC 9314 are encouraged to

AVA Documents Document Sharing Hub
Full document details: ISO IEC 09314-5-1995

investigate the possibility of applying the most recent editions of the standards listed below. Members of IEC and ISO maintain registers of currently valid International Standards.

ISO 9314-1:1989, *Information processing systems — Fibre Distributed Data Interface (FDDI) — Part 1: Token Ring Physical Layer Protocol (PHY).*

ISO 9314-2:1989, *Information processing systems — Fibre Distributed Data Interface (FDDI) — Part 2: Token Ring Media Access Control (MAC).*

ISO/IEC 9314-3:1990, *Information processing systems — Fibre Distributed Data Interface (FDDI) — Part 3: Physical Layer Medium Dependent (PMD).*

ISO/IEC 9314-7:----[1], *Information technology — Fibre Distributed Data Interface (FDDI) — Part 7: Physical Layer Protocol-2 (PHYS-2).*

ISO/IEC 9314-8:----[1], *Information technology — Fibre Distributed Data Interface (FDDI) — Part 8: Media Access Control-2 (MAC-2).*

ISO 8802-2:1994, *Information technology — Telecommunications and information exchange between systems — Local and metropolitan area networks — Specific requirements — Part 2: Logical link control.*

3 Definitions

For the purpose of this part of ISO/IEC 9314, the following definitions apply:

3.1 basic mode: An FDDI-II network operating in basic mode supports FDDI token ring operation only, that is, only the packet switching service is provided. The data unit transmitted on the medium in basic mode is the FDDI frame.

3.2 channel: The term 'channel' is a synonym for 'transmission channel'.

3.3 circuit: A circuit is a bidirectional communications capability provided over a continuous isochronous channel(s) between two or more CS-MUX level entities.

3.4 circuit switching: Circuit switching is the service that provides and manages a set of circuits.

3.5 circuit switching multiplexer (CS-MUX): A CS-MUX multiplexes and demultiplexes circuits onto transmission channels for transmission.

3.6 connection: A connection is a concatenation of circuits and other functional units set up to provide for the transfer of signals between two or more points in a telecommunications network.

3.7 cycle: The cycle is the HRC frame. It has a duration of 125 µs and nominally carries 3 120 symbols at 100 Mbps.

3.8 cycle control field: The cycle control field is a two symbol field in the cycle header. One symbol is for synchronization control while the other is for sequence control. These are used to indicate whether or not cycle synchronization and sequence, respectively, are being maintained. Each of these fields may only be set by the cycle master.

3.9 cycle header: The cycle header begins with the preamble, which establishes the boundary of the 125 µs cycle. The remainder of the cycle header provides synchronization control, sequence control, a cycle sequence field and the cycle programming template.

3.10 cycle master: One ranked monitor in an FDDI-II ring assumes the role of the cycle master. The ring has only one cycle master at a time. The cycle master is responsible for generating and maintaining the cycle structure and the timing of the ring. The cycle master inserts a latency adjustment buffer to adjust the ring size to be an integer multiple of 125 µs. The cycle master is selected by bidding among ranked monitor stations — the monitor with the highest rank becomes the cycle master.

[1] To be published.

Documents
Document Sharing Hub
Full document details: ISO IEC 09314-5-1995

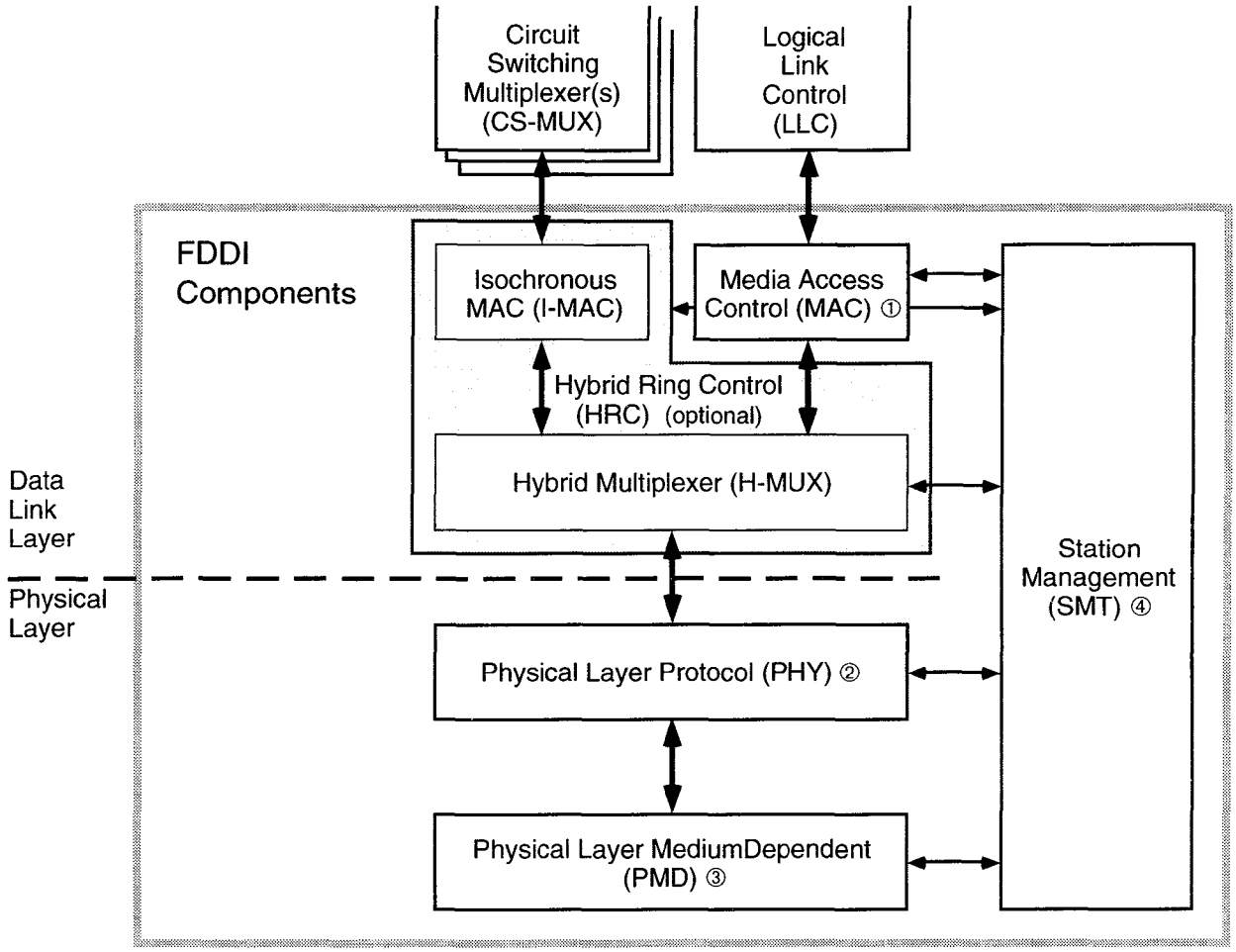

① MAC-2 with HRC; MAC or MAC-2 otherwise.

② PHY-2 with HRC; PHY or PHY-2 otherwise.

③ PMD, SMF_PMD, TP-PMD or LCF-PMD.

④ SMT-2 with HRC; SMT or SMT-2 otherwise.

Figure 1 — Structure of FDDI standards

3.11 cycle sequence: Cycle sequence is a scheme for indicating whether or not the correct order of cycle transmission is being maintained during normal hybrid mode operation. The sequence number of each cycle is indicated in the cycle sequence field of the cycle header. Cycle sequence values 1-63 are used to indicate monitor ranking, and values 64-255 are used for sequencing.

3.12 cycle structure: The cycle structure defines the format of the cycle. The cycle is comprised of the preamble, cycle header, dedicated packet group and cyclic groups.

3.13 cyclic groups: The cycle structure contains 16 wideband channels (WBCs), which are byte interleaved with each other. The interleaving scheme physically organizes the WBCs into 96 cyclic groups per cycle, at 100 Mbps. Each cyclic group contains one byte from each WBC. The bytes from each WBC occur in the same position in each cyclic group.

3.14 dedicated packet group (DPG): The dedicated packet group is the part of the cycle structure which provides a minimum packet channel bandwidth of 0,768 Mbps (at 100 Mbps).

3.15 entity: An entity is an active functional agent within an (OSI) layer or sublayer, including both operational and management functions.

AVA Documents Document Sharing Hub
Full document details: ISO IEC 09314-5-1995

3.16 FDDI-II: FDDI-II is a term used to describe a network consisting of stations composed of FDDI and HRC entiities.

3.17 fibreoptics: The technology whereby optical signals from light-generating transmitters are propagated through optical fibre waveguides to light-detecting receivers.

3.18 hybrid isochronous-MAC service access point (HI-SAP): HI-SAPs are the isochronous access points of the H-MUX. They are used by the I-MAC to access the WBCs.

3.19 hybrid mode: An FDDI-II network operating in hybrid mode imposes a cycle structure with a length of 125 µs. The cycle supports a variable rate packet switching service using the FDDI token ring protocol plus a time-division multiplexed circuit switching service. The bandwidth is partitioned as a dedicated packet data channel plus 16 wideband channels which are dynamically allocated for packet data or isochronous use.

3.20 hybrid multiplexer (H-MUX): The hybrid multiplexer is the component that directs the data flow between the packet and isochronous media access control sublayer and the physical Layer.

3.21 hybrid packet-MAC service access point (HP-SAP): The HP-SAP is the access point of the H-MUX. It is used by the P-MAC to access the packet data channel. One HP-SAP exists and makes available a variable data rate between 0,768 Mbps and 99,072 Mbps, dependent on the partitioning of WBCs between circuit switching and packet switching.

3.22 hybrid ring control: Hybrid ring control is the protocol that exists in an FDDI-II station to provide integrated packet and isochronous switching. It consists of the hybrid multiplexer and the isochronous media access control.

3.23 hybrid service access point (H-SAP): H-SAPs are the service access points of the H-MUX. They are divided into one HP-SAP and up to 16 HI-SAPs.

3.24 isochronous: The term 'isochronous' indicates the essential characteristic of a time-scale or a signal such that the time intervals between consecutive significant instants either have the same duration or durations that are integral multiples of the shortest duration.

3.25 isochronous MAC service access point (I-SAP): I-SAPs are the access points of the I-MAC. They are used by the CS-MUX to access isochronous transmission channels. One and only one isochronous MAC service access point is associated with a transmission channel. Each I-SAP may be open or closed by SMT.

3.26 isochronous media access control (I-MAC): The I-MAC is the data link sublayer entity which provides isochronous data access to a shared medium local area network.

3.27 LAPD: LAPD is the link access procedure for the ISDN D-channel as defined by CCITT.

3.28 latency adjustment buffer (LAB): The LAB is a component that is required at the cycle master to insure that the ring isochronous channel latency is a multiple of 125 µs.

3.29 media access control (MAC): The MAC is the data link sublayer responsible for scheduling and routeing data transmissions on a shared medium local area network (e.g. an FDDI ring).

3.30 mode: There are two modes of operation in FDDI: basic and hybrid. Basic mode is the mode of operation based on the FDDI frame structure where only Packet switching is supported. Hybrid mode is the mode of operation based on the 125 µs cycle where both packet and circuit switching are supported.

3.31 monitor contention procedure: This is one method by which one monitor station is selected to become the cycle master. Only monitor stations that have a rank may bid, and the station with the highest rank wins the right to become cycle master.

3.32 monitor rank: Rank is a priority scheme for the selection of a cycle master from monitor stations. Rank values range from 0 to 63, with 63 being the highest. monitor stations with a rank of 0 do not participate in the monitor contention procedure. A monitor indicates its rank by loading it into the cycle sequence field of the cycle header during the monitor contention procedure.

AVA Documents
Document Sharing Hub
Full document details: ISO IEC 09314-5-1995

3.33 monitor station: Monitor stations in an FDDI-II network are those stations capable of becoming the cycle master. A monitor station is defined as a station containing a hybrid ring control entity with the Class parameter set to MONITOR. All monitor stations contain an LAB and a cycle generate block. A monitor station is permitted to participate in the monitor contention procedure, however it is only permitted to become the cycle master if it has a rank that is greater than zero.

3.34 multi-point circuit: A multi-point circuit is a circuit which exists between more than two CS-MUX entities for multi-point communications.

3.35 non-monitor station: A non-monitor station is a station which does not satisfy the criteria for a monitor station. In general a non-monitor station does not have the capability of becoming the cycle master.

3.36 octet: An octet is a data unit composed of eight ordered bits and is transmitted in FDDI-II as a pair of data symbols.

3.37 packet media access control (P-MAC): The data link sublayer entity responsible for scheduling and routeing data transmissions via a packet data channel on a shared medium local area network.

3.38 packet switching: The service that transfers packetized data. It is provided in FDDI and FDDI-II by the FDDI packet media access control entity (P-MAC).

3.39 physical layer protocol (PHY): The physical layer protocol is responsible for transmitting and receiving a symbol stream on the physical transmission medium.

3.40 protocol data unit (PDU): The unit of data transfer between communicating peer layer entities. It can contain control information, address information, and/or data (e.g., an SDU from a higher layer entity). The FDDI MAC PDUs are tokens and frames.

3.41 programming template: The programming template is a part of the cycle header. The programming template is used by the hybrid multiplexer in each station to determine whether each of the wideband channels is currently assigned to packet or isochronous traffic. The programming template is read by all FDDI-II stations, but its contents may only be modified by the cycle master.

3.42 Q.931: Q.931 is the call control signalling protocol for use on the ISDN D-channel as defined by CCITT.

3.43 receive: This is the action of a station which accepts a token, frame or other symbol sequence from the incoming medium.

3.44 ring: A closed loop consisting of one or more stations connected by a physical medium wherein information is passed sequentially between active stations, each station in turn examining or copying and repeating the information, finally returning it to the originating station.

3.45 services: A set of functions provided by one OSI layer or sublayer entity, for use by a higher layer or sublayer entity or by management entities. Data services are provided to a higher layer or sublayer entity; management services are provided to a management entity.

3.46 service primitive: A service primitive is an access procedure for a service. It is presented at the service interface.

3.47 service data unit (SDU): The unit of data passed between a service user and a service provider by a service primitive. The MAC SDU is the data content of a frame. The PHY SDU is a symbol.

3.48 slave station: A slave station in an FDDI-II network is any station which is not the cycle master. A slave station can be either a monitor station or a non-monitor station.

AVA Documents
Document Sharing Hub

Full document details: ISO IEC 09314-5-1995

3.49 station: An addressable logical and physical node in an FDDI network, capable of transmitting, repeating and receiving information. An FDDI station has one or more PHY and PMD entities, zero or more HRC entities, one or more MAC entities, and one SMT entity.

3.50 station management (SMT): The supervisory entity within an FDDI node that monitors and controls the other FDDI entities in the node.

3.51 symbol: The smallest signalling element used by the data link layer (DLL). The symbol set consists of 16 data symbols and 8 control symbols.

3.52 synchronous: A class of data transmission service whereby each requester is preallocated a maximum bandwidth and guaranteed a maximum access time.

3.53 token: An explicit indication of the right to transmit on a shared medium. On a token ring, the token circulates sequentially through the stations in the ring. At any time, it may be held by zero or one station. MAC uses two classes of tokens: restricted and nonrestricted.

3.54 transmission channel: A transmission channel is a portion of a wideband channel. It is used to transfer isochronous data. Transmission channels may be of different sizes. The ISDN basic rate channel, of 64 kbps, is one of the transmission channels supported by this part of ISO/IEC 9314.

3.55 transmit: This is the action of a station which generates a token, frame, Cycle, or other symbol sequence and places it on the outgoing medium.

3.56 wideband channel (WBC): The WBC is a single unit of bandwidth in the HRC that is assigned to either isochronous or packet data use. WBCs may be subdivided into transmission channels.

4 Conventions and abbreviations

4.1 Conventions

The terms SMT, PHY, HRC, I-MAC, P-MAC, CS-MUX, and LLC, when used without modifiers, refer specifically to the local entities. The term LLC unless otherwise qualified refers to any local user of MAC data services, other than SMT. This includes ISO 8802-2.

Low lines (e.g. requested_service_class) are used as a convenience to mark the name of signals, functions, etc., that might otherwise be misinterpreted as independent individual words if they were to appear in text.

The use of period (e.g. MA_UNITDATA.request) is equivalent to the use of low lines except that a period is used as an aid to distinguish modifier words appended to an antecedent expression.

The following symbols are used in state diagrams and associated notes with the meanings indicated

- ¬ logical not function
- | logical or function
- & logical and function.

4.1.1 Timing values and timers

For the purpose of the description contained in this HRC standard, all timers are assumed to be initialized with the unsigned twos complement of the target time, in either octets or cycles as applicable. Timers are further assumed to count upward if enabled, expiring when an overflow occurs. All timer comparisons are expressed on the basis of elapsed time. Timers run normally in all states if enabled.

Documents
Document Sharing Hub
Full document details: ISO IEC 09314-5-1995

4.2 Abbreviations

CACQ	cycle acquisition
CDG	cyclic data group
CGEN	cycle generation
CS-MUX	circuit switch multiplexer
CXC	cycle exchange
DPG	dedicated packet group
FDDI	Fibre Distributed Data Interface
H-MUX	hybrid multiplexer
H-SAP	hybrid service access point
HI_IND	HI_UNITDATA.indication interface data unit
HI_INV	HI_INVALID.indication
HI_REQ	HI_UNITDATA.request interface data unit
HI-SAP	H-MUX Isochronous service access point
HP_IND	HP_UNITDATA.indication interface data unit
HP_INV	HP_INVALID.indication
HP_REQ	HP_UNITDATA.request interface data unit
HP-SAP	H-MUX packet service access point
HRC	hybrid ring control
I_IND	IM_UNITDATA.indication interface data unit
I-MAC	isochronous media access control
I_REQ	IM_UNITDATA.request interface data unit
I-SAP	isochronous MAC service access point
LAB	latency adjustment buffer
LLC	logical link control sublayer
IMC	isochronous maintenance channel
PDC	packet data channel
PDU	protocol data unit
P-MAC	packet media access control
PH_IND	PH_UNITDATA.indication interface data unit
PH_INV	PH_INVALID.indication
PH_REQ	PH_UNITDATA.request interface data unit
PHY	physical layer
SDU	service data unit
SMT	station management
TNS	new sequence timer
TVS	valid sequence timer
WBC	wideband channel

Documents
Document Sharing Hub
Full document details: ISO IEC 09314-5-1995

5 General description

HRC is a protocol which integrates isochronous and packet data on the same FDDI medium. It is designed to operate at 6,144 Mbps increments above and below the base rate of 100 Mbps. This specification describes operation at 100 Mbps.

The HRC protocol is based on special HRC frames called cycles that carry packet and isochronous data. A new cycle, consisting of control and data octets, is generated by the cycle master every 125 µs. The 125 µs cycle was chosen to facilitate interconnection with public switched networks. This cycle is partitioned into four parts: the preamble, the cycle header, the dedicated packet group, and the wideband channel cyclic groups, its structure is illustrated in figure 2.

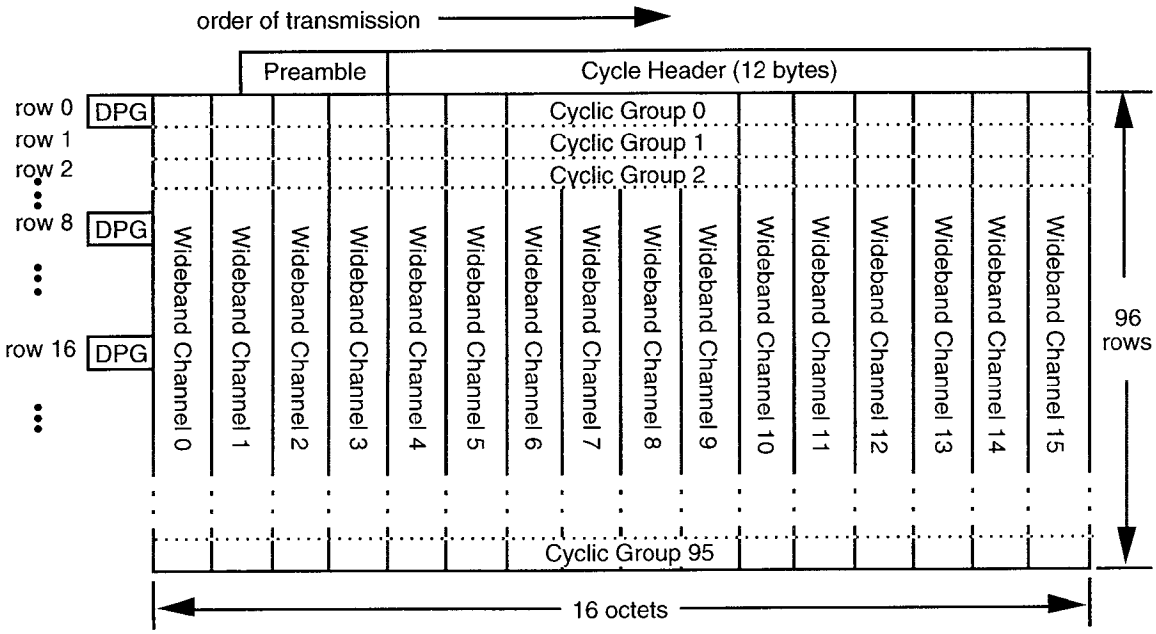

Figure 2 — HRC cycle structure

The data octets of the cycle are divided into a dedicated packet group (DPG) and 16 wideband channels (WBCs). The DPG dedicates 0,768 Mbps of the bandwidth to the FDDI P-MAC. The FDDI MAC is referred to generically in this specification as the packet MAC.

Each WBC provides 6,144 Mbps of bandwidth, and consists of 96 octets interleaved across the cycle. Each WBC can be dynamically allocated to either isochronous or packet data use. When assigned to packet data use, WBCs are combined with the DPG to create the Packet Data Channel. Isochronous WBCs can be subdivided into individual transmission channels. Each data octet of a transmission channel provides 64 kbps of isochronous bandwidth.

The 'dual ring of trees' network topology, specified for use with FDDI, is applicable to FDDI-II. Similarly, the other major parameters defined for FDDI, including the media type, total media path length, bit rate and number of stations supported on a network, also apply to FDDI-II.

There are two modes of operation in an FDDI-II station: basic and hybrid. Basic mode is operation of the ring as an FDDI token ring. This document concentrates on the hybrid mode of operation.

The hybrid mode is the FDDI-II mode of operation where both FDDI token ring operation and isochronous data transfer are integrated onto the same medium. The hybrid mode of operation requires the existence of a hybrid ring control (HRC) entity between the FDDI MAC and the FDDI PHY, as shown in figure 1.

Documents
Document Sharing Hub
Full document details: ISO IEC 09314-5-1995

The HRC integrates packet and isochronous data into FDDI-II Cycles, which are transmitted onto the ring isochronously every 125 µs. Based on the cycle header, the hybrid multiplexer (H-MUX) component of the HRC interprets each WBC as either a portion of the packet data channel or as an isochronous channel of 6,144 Mbps.

The packet data channel (PDC) has a minimum rate of 0,768 Mbps, which is provided by the DPG. The PDC can be extended to higher rates, in increments of 6,144 Mbps, by allocating WBCs to it. Its maximum rate of 99,072 Mbps is achieved by allocating all WBCs to the Packet Data Channel.

Each WBC allocated for isochronous use can be subdivided into lower speed transmission channels by the isochronous media access control (I-MAC) component of the HRC. FDDI-II has been designed to allow separate allocator stations for isochronous WBCs, with different allocation policies permitted to coexist on the same ring.

The hybrid mode of operation is initiated and controlled by the cycle master. The cycle master is responsible for generating cycles onto the ring. Stations capable of assuming the cycle master role are known as monitor stations. All other stations on the hybrid ring are referred to as non-monitor stations. The cycle master is chosen from a set of ranked monitor stations before hybrid mode initialization, or during recovery after the 125 µs cycle synchronization has been lost or after out of sequence cycles have been detected. monitor station rankings are used to dynamically select a new cycle master during the monitor contention procedure.

5.1 Traffic types

There are two types of traffic on an FDDI-II network in hybrid mode: Circuit-Switched (isochronous) and Packet-Switched. These types are depicted in figure 3. Circuit-Switched traffic is switched between the H-MUX and the I-MAC. Packet-Switched traffic is switched between the H-MUX and the FDDI MAC, referred to here as the packet MAC (P-MAC) for generality. Packet-Switched traffic medium access is governed by the P-MAC, which permits two types of access: synchronous and asynchronous. Synchronous access uses a pre-assigned portion of the packet data bandwidth. Asynchronous access uses the remaining packet data bandwidth on the reception of an early token. There are two types of tokens: restricted and non-restricted. Packet data access is specified in ISO/IEC 9314-2.

Circuit-Switched	**Packet-Switched**	
Isochronous	Synchronous	Asynchronous:
		Restricted mode Non-Restricted mode

Figure 3 — Hybrid mode traffic types

5.2 Transmission facilities

5.2.1 Transmission channel

WBCs may be subdivided into separate transmission channels to permit simultaneous, independent isochronous dialogues to occur between I-MAC SAPs within the same WBC. FDDI-II transmission channels may be of different data rates, but are never greater than the 6,144 Mbps rate of the WBC.

Documents
Document Sharing Hub
Full document details: ISO IEC 09314-5-1995

5.2.2 Channel properties

The properties of an FDDI-II transmission channel are summarized as follows.

a) A channel exists between I-MAC service access points (I-SAPs).

b) A channel is a part or all of a WBC.

c) A channel is contiguous within a WBC.

d) A channel has position within a WBC which is the subject of boundary constraints.

e) A channel has one of a set of sizes.

f) There are two types of coherence class applicable to a channel.

g) A channel has a security label.

h) A channel has an owner.

i) A channel can be de-allocated based upon the allocator's reclamation criteria.

5.2.3 Channel sizes

Channel allocations are permitted in multiples of 64 kbps up to a maximum of 6,144 Mbps (one WBC). The channel is specified by its position within the WBC, the WBC number and the size of the channel and is byte aligned within the WBC. 8 kbps channels are also supported on bit boundaries, 16 kbps channels on even bit boundaries, and 32 kbps channels on quartet (nibble) boundaries. The following list gives examples of channel sizes that are supported by the FDDI-II allocation scheme.

Bits / Cycle	Channel rate (kbps)
1	8
2	16
4	32
8	64
48	384
192	1 536
1+192	1 544
240	1 920
256	2 048
768	6 144

5.2.4 Channel coherence classes

Channel coherence refers to the preservation of sequence integrity for data carried in a channel. Coherence is always maintained within a channel. Coherence is optionally maintained across channels. There are two channel coherence classes:

a) Class 1: coherence is not required across channels.

b) Class 2: coherence is required across channels relative to the cycle.

Documents
Document Sharing Hub

Full document details: ISO IEC 09314-5-1995

5.2.5 Circuit

A circuit is defined as the use of a transmission channel between two or more CS-MUX level entities for bi-directional communications. Circuits exist between CS-MUX SAPs.

A multi-point circuit is defined as the use of a transmission channel among more than two CS-MUX level entities for multi-point communications.

5.2.6 Connection

A connection is a concatenation of circuits, circuit switches and other functional units to transfer symbols between two or more end points in a telecommunications network.

5.3 Bandwidth management

Bandwidth management is an SMT function. The description in this subclause is merely informative. A hierarchy of procedures for Bandwidth Management is envisioned,as shown in figure 4. These procedures include WBC management and transmission channel management.

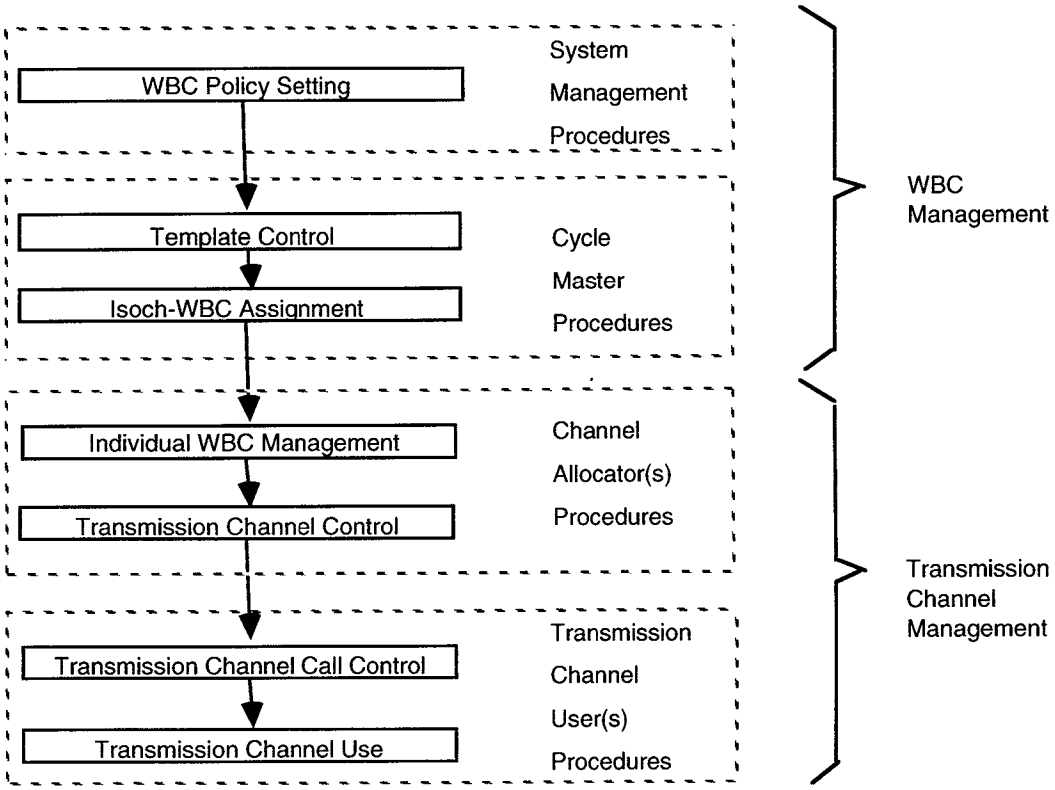

Figure 4 — Bandwidth management hierarchy

5.3.1 Wideband channel management

The procedures for wideband channel Management include the System Management procedure and cycle master procedures.

Documents Document Sharing Hub
Full document details: ISO IEC 09314-5-1995

5.3.1.1 System management procedure

WBC Policy Setting is the System Management procedure used for defining and conveying to the FDDI-II cycle master SMT the maximum number of WBCs that may be allocated for isochronous use. This sets the upper limit on the maximum number of isochronous WBCs that can be administered by a particular individual WBC management entity.

5.3.1.2 Cycle master procedures

There are two cycle master procedures concerned with WBC Management:

a) Template Control: This is the cycle master SMT procedure that instructs the H-MUX to change the cycle header programming template, based on the WBC policy in force. See 5.4 for a discussion of the cycle master and the programming template.

b) Isochronous WBC Assignment: This is the FDDI-II management procedure that assigns or releases a WBC to or from a specific WBC management entity (called a Channel Allocator). The assignment is made to the Channel Allocator for its use and control. This procedure requires interaction between a Channel Allocator SMT and the cycle master SMT.

5.3.2 Transmission channel management

The procedures for transmission channel management include Channel Allocator procedures and transmission channel User procedures.

5.3.2.1 Channel allocator procedures

There are two Channel Allocator procedures:

a) Individual WBC management: This is the procedure used to control the transmission channel bandwidth rates that are available to requesting user stations.

b) Transmission channel control: This is the procedure used for requesting, releasing and supervising the use of a transmission channel.

5.3.2.2 Transmission channel user procedures

a) Transmission channel call control: This is the procedure used for establishing, releasing and supervising a call on an allocated transmission channel.

b) Transmission channel use: This is the procedure used for transferring isochronous information across a transmission channel connection.

5.4 Station structure

An FDDI-II ring has two types of stations: monitor and non-monitor. Monitor stations are those stations capable of becoming the cycle master, and are the only stations permitted to generate cycles. There may be more than one monitor station in a ring, however only one monitor may be the cycle master at any given time. The monitor station with the highest rank becomes the cycle master during the monitor contention procedure. The cycle master is required to establish and maintain the hybrid mode of operation. Non-monitor stations are all other stations that are not capable of becoming the cycle master.

5.4.1 Monitor station

A monitor station, illustrated in figure 5, incorporates the Physical layer protocol (PHY), Packet media access control (P-MAC) and Logical Link Control (LLC) required by FDDI. Additionally, the hybrid multiplexer (H-MUX), isochronous media access control (I-MAC), and latency adjustment buffer (LAB)

AVA Documents
Document Sharing Hub
Full document details: ISO IEC 09314-5-1995

are required by monitor stations. The LAB is operational in the cycle master and may optionally be operational in the other monitor stations.

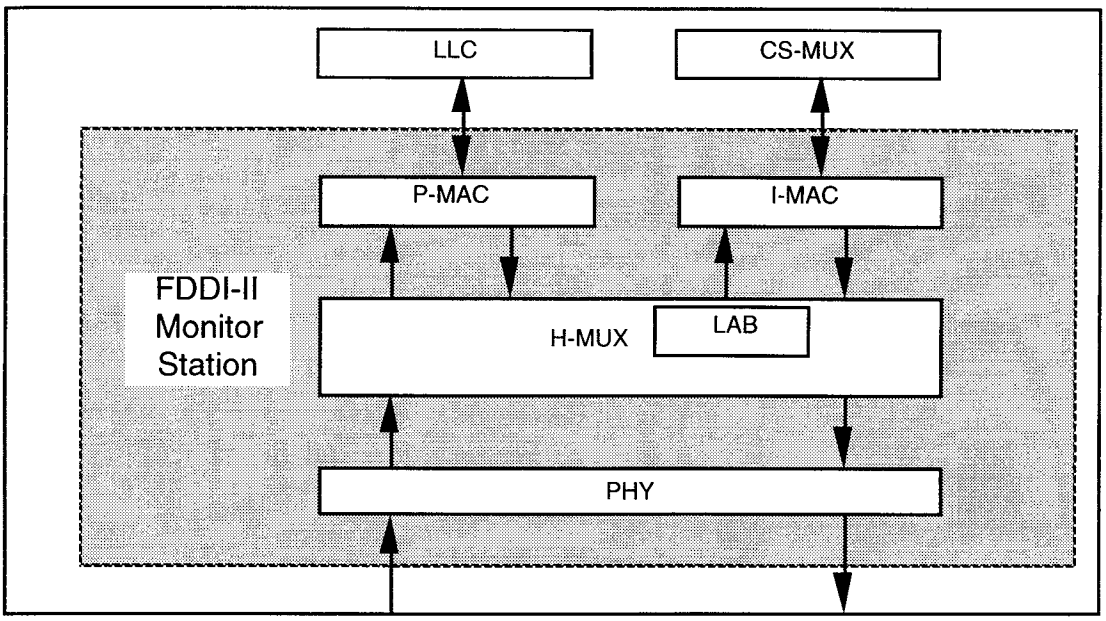

Figure 5 — Data flow through an FDDI-II monitor station

One monitor station becomes the cycle master for hybrid mode initialization or during the hybrid mode monitor contention procedure. While in basic mode, two methods are available for selection of the cycle master. In the first, the system management can directly instruct a monitor station to initialize the ring in hybrid mode. In the second, a monitor station can set a timer and wait for the ring to switch to hybrid mode. In this case, if the timer expires, the monitor station begins the contention process to select the cycle master.

The cycle master is responsible for generating the programming template at the beginning of each cycle and inserting the LAB into the ring to insure that the delay around the ring is an integer multiple of 125 µs. The programming template carries information which associates each WBC with either the packet data channel or with isochronous applications.

NOTE 1 The latency adjustment buffer is inserted at the cycle master station to insure that the delay around the ring for Isochronous data is an integer multiple of 125 µs. It is desirable however, in certain applications, for the H-MUX to present isochronous WBCs to the I-MAC before inserting the data in the LAB. In any case, data at the cycle master for transmission onto the medium is inserted after the LAB.

5.4.2 Non-monitor station

A non-monitor station, illustrated in figure 6, also incorporates the PHY, P-MAC and LLC required by FDDI, and the HRC H-MUX and I-MAC. Non-monitor stations, however, do not have the LAB, nor do they have the capability to initiate cycles.

5.4.3 H-MUX

The H-MUX is the HRC entity responsible for the management of transitions between basic and hybrid modes, and for the control and maintenance of hybrid mode cycle synchronization. The H-MUX also controls the flow of data between the P-MAC, I-MAC and PHY entities in both modes. In basic mode data is passed directly between the P-MAC and the physical layer. In hybrid mode, the H-MUX multiplexes and demultiplexes the I-MAC's isochronous data and the P-MAC's packet data onto or out of

AVA Documents
Document Sharing Hub

Full document details: ISO IEC 09314-5-1995

the physical layer. The functional architecture of H-MUX is illustrated in figure 7. The shaded blocks (CGEN and LAB) are only required in a monitor station.

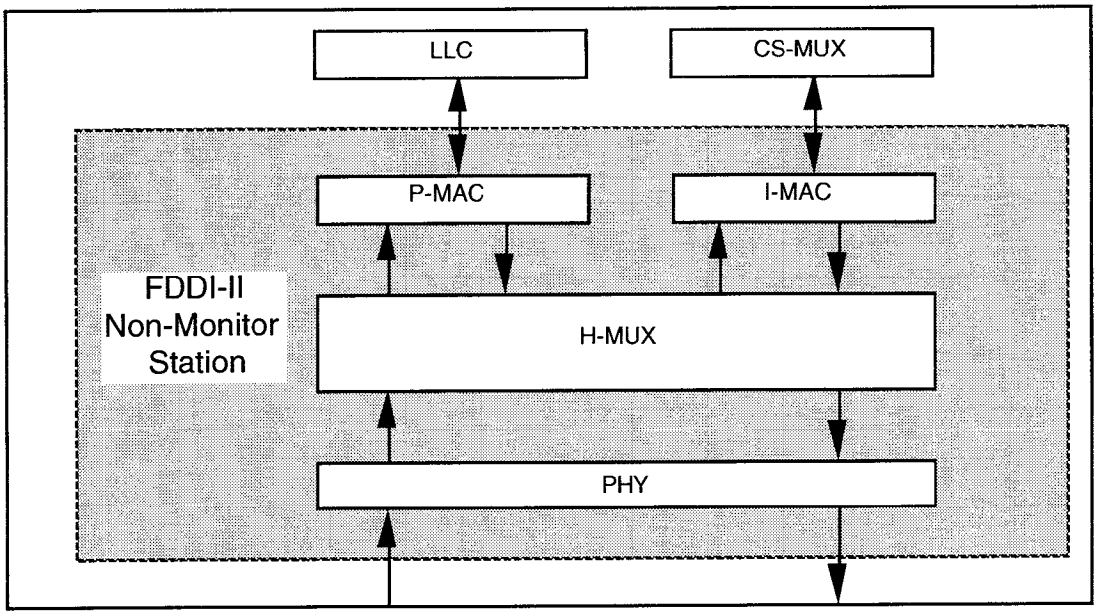

Figure 6 — Data flow through an FDDI-II non-monitor station

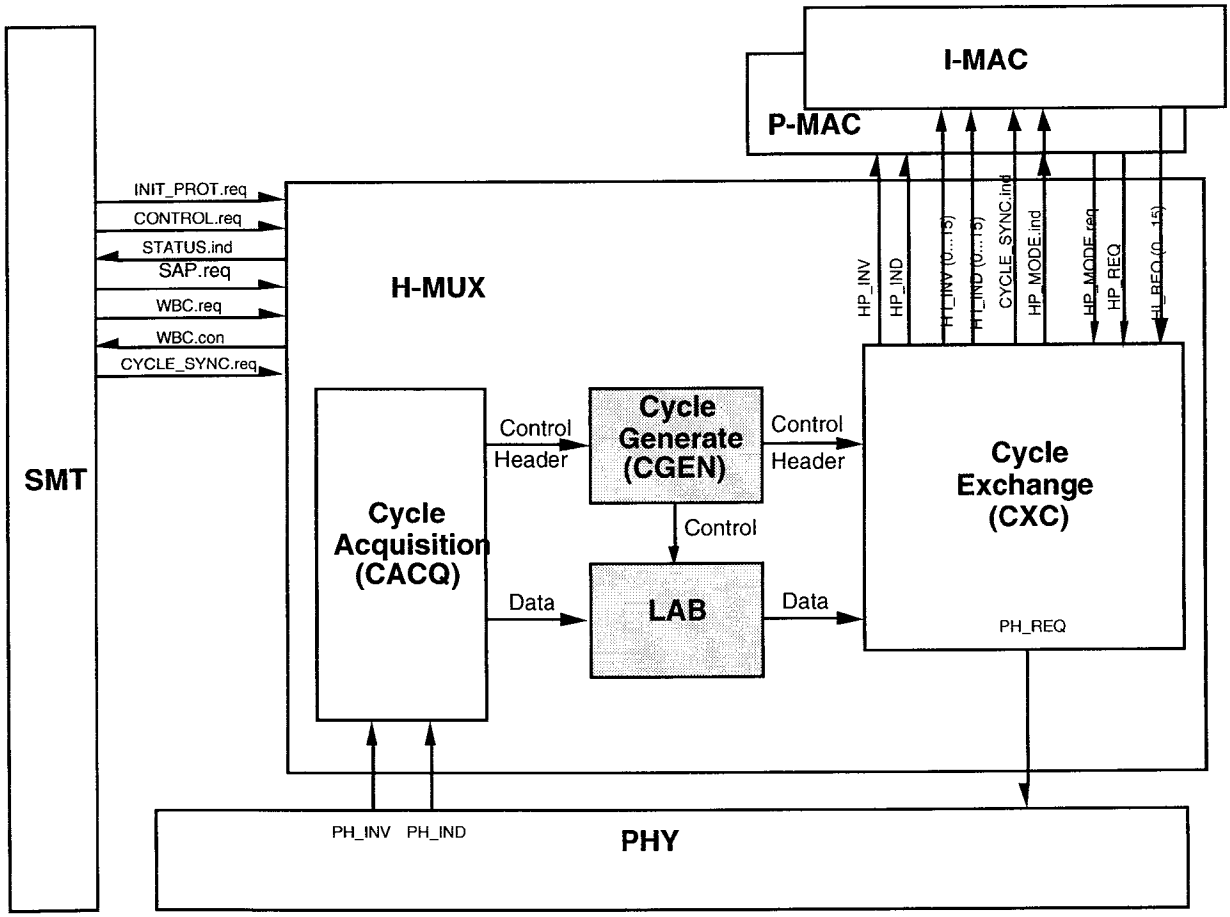

Figure 7 — Architectural block diagram of the H-MUX

Documents
Document Sharing Hub
Full document details: ISO IEC 09314-5-1995

The H-MUX in a non-monitor station includes only the cycle acquisition and cycle exchange functional blocks. Clause 8 describes their internal composition.

The H-MUX indicates the current mode of operation to the local MAC entities via the CYCLE_MODE.ind primitive. During hybrid mode operation H-MUX sends the CYCLE_SYNC.ind signal for each cycle received so as to announce the beginning of the cyclic groups to the I-MAC. The I-MAC uses the CYCLE_SYNC.ind signal to locate WBCs for reading and writing data symbol pairs. The Cycle-Sequence value is also passed to the I-MAC as a parameter of CYCLE_SYNC.ind signal.

The programming template, from each received cycle, is copied by the cycle acquisition block for use as input to the WBC template filter state machines. The programming template identifies the contents of each WBC to be either packet or isochronous data.

Hybrid service access points (H-SAPs) are the H-MUX access points for use by the I-MAC and P-MAC. There is one HI-SAP per Isochronous WBC for the I-MAC and a single HP-SAP for the P-MAC.

Each packet data symbol received from the P-MAC in an HP_REQ service primitive is inserted by cycle exchange into a position within the current cycle which corresponds to either a packet WBC or the dedicated packet group (DPG). Similarly each symbol received from either a packet WBC or the DPG is delivered by cycle exchange to the P-MAC using the HP_IND service primitive.

Each isochronous data symbol received from an I-MAC in an HI_REQ service primitive is inserted by cycle exchange into a position within the current cycle which corresponds to the appropriate Isochronous WBC. Similarly each data symbol received from an Isochronous WBC is delivered to the I-MAC using the HI_IND service primitive, providing the HI-SAP corresponding to that WBC is open. If an HI-SAP is closed the Isochronous data for that WBC is repeated.

See clause 6 for further information on Interface Services.

5.4.3.2 Monitor station H-MUX

In order to provide cycle master capability, the H-MUX in a monitor station shall include the cycle generation (CGEN) and latency adjustment buffer (LAB) functions in addition to the functional blocks required by a non-monitor station. Clause 8 describes the internal composition of these blocks.

The LAB provides the buffering required by a cycle master to ensure that the ring contains an integral number of cycles. Received data is written into the LAB by the cycle acquisition process and read out by the cycle exchange process.

The cycle generator provides the extra control functionality required by a monitor for it to have the capability to source cycles. The tasks which need to be performed by the cycle generator therefore include: deciding when to source and when to repeat cycles, controlling the LAB, providing the facility for SMT to assign WBCs, and synchronization of transmit 8 kHz timing to an external reference.

In a cycle master, SMT maintains the programming template and provides it to the cycle master as necessary. The cycle master transmits the programming template in the Cycle-Header with a cycle sequence number. The cycle master reads returning cycle header fields and informs its local SMT entity of ring error conditions. The cycle master also operates in the same way as other stations for data transfer functions.

5.4.4 I-MAC

The I-MAC is responsible for routeing the isochronous channels in use at this station to and from the CS-MUX. Isochronous channels (within open HI-SAPs) not in use at this station are looped back by I-MAC to H-MUX, so that they may be repeated. Figure 8 illustrates the architecture of the I-MAC.

Documents
Document Sharing Hub
Full document details: ISO IEC 09314-5-1995

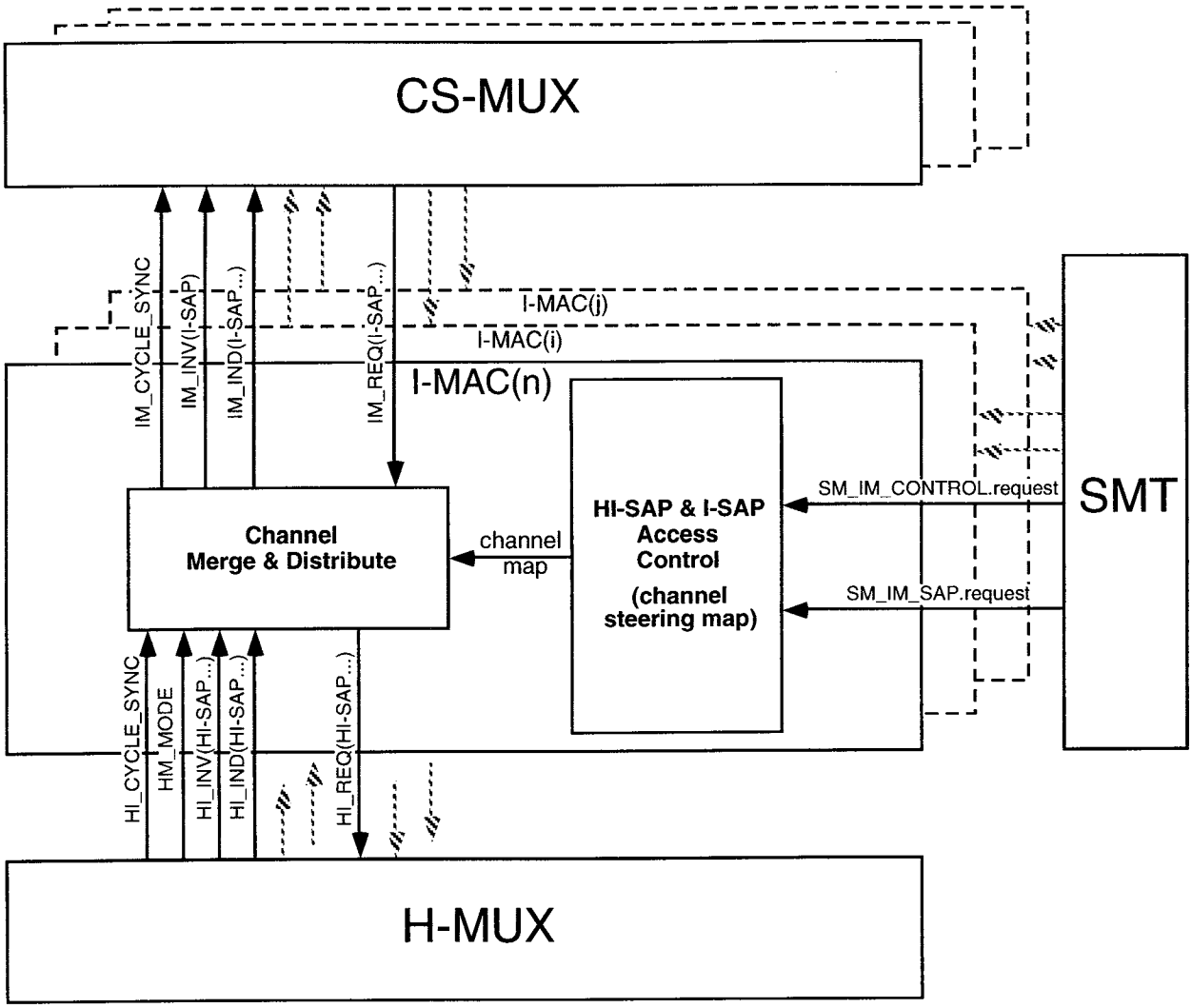

Figure 8 — Architectural block diagram of the I-MAC

The Isochronous service access point (I-SAP) is the I-MAC access point for the CS-MUX. There is one I-SAP per channel allocated at this I-MAC.

The steering map provided by SMT to I-MAC identifies the current open channels (open I-SAPs) within the open isochronous WBCs (open HI-SAPs). The I-MAC receives all symbols in an open HI-SAP from the H-MUX, and separates the channels based on the steering map. Using the cycle sequence signal, the I-MAC delivers these channels to the CS-MUX via the I_IND service primitive . In the opposite direction, I-MAC receives data for the channels from the CS-MUX with I_REQ service primitives.

6 HRC services

This clause describes the services of the HRC. The following subclauses specify the services as follows:

6.1 PHY to H-MUX Services

6.2 H-MUX to MAC Services

6.3 H-MUX to P-MAC Services

6.4 H-MUX to I-MAC Services

6.5 H-MUX to SMT Services

Documents
Document Sharing Hub
Full document details: ISO IEC 09314-5-1995

6.6 I-MAC to CS-MUX Services

6.7 I-MAC to SMT Services

6.1 PHY to H-MUX services

This subclause specifies the services provided at the interface between the PHY and the H-MUX entities, to support the exchange of PDUs among peer H-MUX entities. Additional detail is provided in ISO/IEC 9314-1 concerning conditions that generate these primitives and PHY actions upon receipt of H-MUX-generated primitives.

The following primitives are defined:

PH_UNITDATA.request
PH_UNITDATA.indication
PH_INVALID.indication

All primitives defined in this subclause are mandatory.

The description of each primitive includes a description of the information that shall be passed between the PHY and H-MUX entities.

These services shall be 'synchronous', so that each PH_UNITDATA.indication causes exactly one PH_UNITDATA.request. Depending upon the current internal configuration of the node, the PH_UNITDATA.request may be returned to the same PHY or to a different PHY.

6.1.1 PH_UNITDATA.request

This primitive transfers the symbol data stream to PHY from H-MUX.

6.1.1.1 Semantics of the primitive

```
PH_UNITDATA.request        (
                           PH_Request(symbol)
                           )
```

The symbol specified by PH_Request (symbol) shall be one of the following:

H, I, J, K, L, n, R, S, T and optionally Q or V, from the set of symbols defined in the FDDI standard on PHY.

PH_Request(Q or V) is not required in implementations where the Repeat Filter function is located prior to the PH_UNITDATA.indication interface.

6.1.1.2 When generated

H-MUX shall generate one PH_UNITDATA.request for each PH_UNITDATA.indication received from PHY.

6.1.1.3 Effect of receipt

The effect of receipt of this primitive by PHY is not specified.

6.1.2 PH_UNITDATA.indication

This primitive transfers the symbol data stream from PHY to H-MUX.

AVA Documents Document Sharing Hub

Full document details: ISO IEC 09314-5-1995

6.1.2.1 Semantics of the primitive

```
PH_UNITDATA.indication        (
                              PH_Indication(symbol)
                              )
```

The symbol specified by PH_Indication (symbol) shall be one of the following:

H, I, J, K, L, n, R, S, T and optionally Q or V, from the set of symbols defined in the FDDI standard on PHY.

PH_Indication(Q or V) is not required in implementations where the Repeat Filter function is located prior to the PH_UNITDATA.indication interface.

6.1.2.2 When generated

PHY shall generate a PH_UNITDATA.indication for each decoded symbol received from PMD. This indication shall be generated once every symbol period.

6.1.2.3 Effect of receipt

Upon receipt of this primitive, H-MUX shall accept a symbol from PHY, process it, and generate a corresponding PH_UNITDATA.request to PHY, conveying the resulting output symbol.

6.1.3 PH_INVALID.indication

This primitive indicates to H-MUX that continuity of the received symbol stream has been compromised.

6.1.3.1 Semantics of the primitive

```
PH_INVALID.indication         (
                              PH_Invalid
                              )
```

The PH_Invalid parameter shall indicate that the PH_UNITDATA.indication symbol stream is invalid.

6.1.3.2 When generated

PHY shall generate this primitive whenever it detects that continuity of the received symbol stream has been compromised.

6.1.3.3 Effect of receipt

Receipt of this primitive by H-MUX while it is in basic mode shall cause the H-MUX to pass an HP_INVALID primitive to the P-MAC.

Receipt of this primitive by H-MUX while it is in hybrid mode shall cause the H-MUX to output HP_INVALID and HI_INVALID primitives to the P-MAC and I-MAC. The Receive function of H-MUX shall return to basic mode until another cycle is received.

6.2 H-MUX to MAC services

This subclause specifies the services provided at the interface between the H-MUX and both the I-MAC and P-MAC entities to allow H-MUX to convey its mode of operation to the local MAC entities.

The following primitive is defined:

HM_MODE.indication

Documents
Document Sharing Hub

Full document details: ISO IEC 09314-5-1995

6.2.1 HM_MODE.indication

The function of this primitive is to provide information on the current mode of operation of H-MUX to the local MAC entities.

6.2.1.1 Semantics of the primitive

```
HM_MODE.indication          (
                            HM_mode
                            )
```

The HM_mode parameter shall set to 'basic' during basic mode operation, 'hybrid' during hybrid mode operation whenever the H-MUX cycle control state machine is in the SLAVE or STANDBY states, and 'master' during hybrid mode operation whenever the H-MUX cycle control state machine is in the RESYNCH or MASTER states.

6.2.1.2 When generated

H-MUX continuously sends an indication of its mode to the local MAC entities.

6.2.1.3 Effect of receipt

The effect of receipt of this primitive by the local MAC entities is unspecified.

6.3 H-MUX to P-MAC services

This subclause specifies the services provided at the interface between the P-MAC and H-MUX entities to allow P-MAC to exchange P-MAC protocol data units with peer P-MAC entities. Additional detail is provided in the FDDI standard on MAC concerning conditions that generate these primitives and P-MAC actions upon receipt of H-MUX generated primitives.

The following primitives are defined:

HP_UNITDATA.request
HP_UNITDATA.indication
HP_INVALID.indication
HP_MODE.request

All primitives defined in this subclause are mandatory.

The description of each primitive includes a description of the information that is passed between the P-MAC and H-MUX entities.

These services shall be 'synchronous', so that each HP_UNITDATA.indication causes exactly one HP_UNITDATA.request.

6.3.1 HP_UNITDATA.request

This primitive transfers the symbol data stream from P-MAC to H-MUX.

6.3.1.1 Semantics of the primitive

```
HP_UNITDATA.request         (
                            HP_Request(symbol)
                            )
```

The symbol specified by HP_Request (symbol) shall be one of the following:

I, J, K, L, n, R, S or T, from the set of symbols defined in the FDDI standard on PHY.

AVA Documents Document Sharing Hub
Full document details: ISO IEC 09314-5-1995

6.3.1.2 When generated

P-MAC shall generate one HP_UNITDATA.request for each HP_UNITDATA.indication received from H-MUX.

6.3.1.3 Effect of receipt

Upon receipt of this primitive the H-MUX shall accept the symbol and multiplex it into the transmit data stream in the Packet Data Channel.

6.3.2 HP_UNITDATA.indication

This primitive transfers the symbol data stream to P-MAC from H-MUX.

6.3.2.1 Semantics of the primitive

```
HP_UNITDATA.indication          (
                                HP_Indication(symbol)
                                )
```

The symbol specified by HP_Indication (symbol) shall be one of the following:

H, I, J, K, L, n, R, S, T and optionally Q or V, from the set of symbols defined in ISO/IEC 9314-1.

6.3.2.2 When generated

H-MUX shall generate a HP_UNITDATA.indication for each symbol received from PHY in basic mode, and for each packet data channel symbol in hybrid mode. This indication shall be generated once every symbol period in basic mode. Since the packet data channel is byte interleaved with other information in hybrid mode, P-MAC shall be capable of processing intermittent pairs of indications in hybrid mode.

6.3.2.3 Effect of receipt

Upon receipt of this primitive, MAC shall accept a symbol from H-MUX, process it, and generate a corresponding HP_UNITDATA.request to H-MUX, conveying the resulting output symbol.

6.3.3 HP_INVALID.indication

This primitive indicates to P-MAC that continuity of the received symbol stream has been compromised.

6.3.3.1 Semantics of the primitive

```
HP_INVALID.indication           (
                                HP_Invalid
                                )
```

The HP_Invalid parameter shall indicate that the HP_UNITDATA.indication symbol stream is invalid.

6.3.3.2 When generated

H-MUX shall generate this primitive whenever it does not have a valid symbol stream to present to P-MAC.

6.3.3.3 Effect of receipt

The effect of receipt of this primitive by P-MAC is unspecified.

AVA Documents Document Sharing Hub

Full document details: ISO IEC 09314-5-1995

6.3.4 HP_MODE.request

The function of this primitive is to allow the P-MAC to force transmission of MAC recovery frames (*e.g.* Claim and Beacon) in basic mode.

6.3.4.1 Semantics of the primitive

```
HP_MODE.request          (
                         HP_mode
                         )
```

The HP_mode parameter shall be set to 'any' to allow normal hybrid operation and to 'basic' to force transmission of frames in basic mode.

6.3.4.2 When generated

P-MAC continuously sends an indication of its mode to the local H-MUX entitiy. P-MAC shall allow normal H-MUX operation except during transmission of MAC frames during ring recovery.

6.3.4.3 Effect of receipt

When HP_mode(any) is asserted the H-MUX is free to transmit cycles in the normal manner. When the HP_mode(basic) is asserted the H-MUX shall transmit MAC SDUs in basic mode.

Only the channel exchange process is affected by this primitive. All other parts of H-MUX are unaffected and continue to operate normally.

6.4 H-MUX to I-MAC services

This subclause specifies the services provided at the interface between the I-MAC and H-MUX entities to allow I-MAC to exchange I-MAC protocol data units with peer I-MAC entities.

There are 16 HI-SAPs defined at the H-MUX to I-MAC interface, corresponding to the total of 16 WBCs available for isochronous applications. When the ring operates in basic mode, all the HI-SAPs are closed. When the ring is in hybrid mode, the SMT opens and closes the appropriate HI-SAPs in response to the WBC Assignment process. The definition of 16 separate HI-SAPs is not intended to imply any particular physical implementation.

The following primitives are defined:

HI_UNITDATA.request

HI_UNITDATA.indication

HI_INVALID.indication

HI_CYCLE_SYNC.indication

Each primitive includes the information that is passed between the I-MAC and H-MUX entities. All H-MUX data service primitives have the duration of an integral number of symbol periods.

6.4.1 HI_UNITDATA.request

This primitive defines the transfer of data from I-MAC to the local H-MUX entity.

Documents
Document Sharing Hub
Full document details: ISO IEC 09314-5-1995

6.4.1.1 Semantics of the primitive

```
HI_UNITDATA.request        (
                           HI_Request (HI-SAP,symbol)
                           )
```

The symbol specified by HI_Request (HI-SAP,symbol) shall be either I or n, where n is any of the 16 data symbols specified in PHY.

6.4.1.2 When generated

I-MAC shall send H-MUX a HI_UNITDATA.request following receipt of each HI_UNITDATA.indication primitive for that HI-SAP. The time delay between corresponding HI_UNITDATA.indication and HI_UNITDATA.request primitives is implementation dependent and may be null. The timing of the HI_UNITDATA.request primitive shall be such that during normal operation 192 HI_UNITDATA.request primitives, corresponding to the received indication primitives, (comprising the data for one WBC for one cycle) are issued for each open HI-SAP between each assertion of the HI_CYCLE_SYNC.indication primitive.

6.4.1.3 Effect of receipt

Upon receipt of this primitive the H-MUX shall accept the symbol and multiplex it into the transmit data stream at the appropriate point in time.

6.4.1.4 Additional comments

During normal operation the timing of the HI_CYCLE_SYNC.indication primitive will be regular, and define the start of cycle, however the precise timing of the HI_UNITDATA.request primitives can be affected by the preamble and cycle header.

6.4.2 HI_UNITDATA.indication

This primitive defines the transfer of data from the H-MUX entity to I-MAC.

6.4.2.1 Semantics of the primitive

```
HI_UNITDATA.indication     (
                           HI_Indication (HI-SAP,symbol)
                           )
```

The symbol specified by HI_Indication (HI-SAP,symbol) shall be one of the following: I, L, n, T, R, S, and optionally Q, H, or V.

6.4.2.2 When generated

The H-MUX entity sends I-MAC an HI_UNITDATA.indication whenever H-MUX has a valid I-MAC symbol (as defined in 6.3.2.1) from the receive data stream available for output and the appropriate HI-SAP is open. The timing of the HI_UNITDATA.indication primitive shall be such that during normal operation 192 HI_UNITDATA.indication primitives are issued for each open HI-SAP between each assertion of the HI_CYCLE_SYNC.indication primitive. This indication is never sent in basic mode.

6.4.2.3 Effect of receipt

Upon receipt of this primitive, I-MAC shall accept a symbol from H-MUX .

Documents
Document Sharing Hub
Full document details: ISO IEC 09314-5-1995

6.4.2.4 Additional comments

During normal operation the timing of the HI_CYCLE_SYNC.indication primitive will be regular, and define the start of cycle, however the precise timing of the HI_UNITDATA.indication primitives can be affected by the preamble and cycle header.

6.4.3 HI_INVALID.indication

This primitive is generated by the H-MUX and asserted to I-MAC to indicate that H-MUX is unable to present a valid data stream to I-MAC.

6.4.3.1 Semantics of the primitive

```
HI_INVALID.indication        (
                             HI_Invalid(HI-SAP)
                             )
```

The HI_Invalid parameter shall indicate that H-MUX is unable to present a valid data stream to I-MAC.

6.4.3.2 When generated

The H-MUX generates this primitive whenever the receiver does not have a valid I-MAC data symbol (as defined in 6.3.2.1) to output for this HI-SAP. This may be due to the associated HI-SAP being closed, the receipt of an illegal symbol at the PHY interface, or the receipt of a PH_INVALID.indication at the PHY interface.

6.4.3.3 Effect of receipt

The correct course of action on receipt of invalid data in an isochronous channel is application dependent. Therefore upon receipt of this primitive, I-MAC shall pass a IM_INVALID.indication to CS-MUX in the appropriate channels.

6.4.4 HI_CYCLE_SYNC.indication

The function of this primitive is to provide 8 kHz timing and cycle sequence information to I-MAC for use in timing generation for isochronous data.

6.4.4.1 Semantics of the primitive

```
HI_CYCLE_SYNC.indication     (
                             HI_cycle_sync,
                             HI_cycle_sequence
                             )
```

The HI_cycle_sync parameter shall be used to provide 8 kHz timing to I-MAC.

The HI_cycle_sequence parameter shall be used to provide the cycle sequence number to I-MAC.

6.4.4.2 When generated

During normal synchronized operation in hybrid mode H-MUX shall send HI_CYCLE_SYNC.indication to I-MAC at 125 µs intervals as defined by the 8 kHz timing used for transmission of hybrid cycles. During hybrid synchronization the time intervals between the start of cycle transmission can vary due to resynchronisation to a received cycle: this will be reflected in the periodicity of the HI_CYCLE_SYNC.indication primitive. Provision of this primitive in basic mode is optional, if it is provided a local frequency reference may be used.

AVA Documents
Document Sharing Hub

Full document details: ISO IEC 09314-5-1995

6.4.4.3 Effect of receipt

I-MAC shall use this primitive to generate the 8 kHz timing for isochronous data.

6.4.4.4 Additional comments

Data transfer timing between I-MAC and H-MUX is referenced to the HI_CYCLE_SYNC.indication primitive. In a cycle master the timing of this primitive is phase locked to the phase of the SM_HM_CYCLE_SYNC.request primitive input to H-MUX. However no predetermined phase between the two can be assumed.

6.5 H-MUX to SMT services

This subclause specifies the services provided at the interface between the station management (SMT) entity and H-MUX. This interface is used by the local SMT entity to monitor and control the operation of H-MUX. Additional detail is provided in SMT concerning conditions that generate these primitives and SMT actions upon receipt of H-MUX-generated primitives.

The following primitives are defined:

SM_HM_INITIALIZE_PROTOCOL.request

SM_HM_CONTROL.request

SM_HM_STATUS.indication

SM_HM_SAP.request

SM_HM_WBC.request

SM_HM_WBC.confirm

SM_HM_CYCLE_SYNC.request

Each primitive includes the information that is passed between H-MUX and SMT.

All primitives described in this subclause are mandatory in stations that support the optional monitor functions. Primitives and parameters pertaining solely to the optional monitor functions need not be supported by non-monitor stations.

6.5.1 SM_HM_INITIALIZE_PROTOCOL.request

This primitive has local significance and is used by SMT to change operational parameters of H-MUX. SMT may change any or all of these parameters at any time regardless of whether H-MUX is operational in the ring; however a change in some of the parameters may not be within the domain of normal FDDI-II operation.

6.5.1.1 Semantics of the primitive

```
SM_HM_INITIALIZE_PROTOCOL.request    (
                                      Rank_value,
                                      Initialize_flag,
                                      Sustain_flag,
                                      Maintain_flag
                                      Contend_flag,
                                      T_Hold_value,
                                      T_Valid_value,
                                      T_Err_value,
                                      T_Recov_value,
```


Documents
Document Sharing Hub
Full document details: ISO IEC 09314-5-1995

PA_Max,
)

The Rank_value parameter sets the value of the station monitor rank. The rank specifies the current negotiated monitor precedence (default 0).

The Initialize_flag parameter sets the value of the Initialize flag. This flag is set true by SMT if it intends the ring to operate in hybrid mode and it wishes to allow this station to take the ring to hybrid mode on TVS expiry.

The Sustain_flag parameter sets the value of the Sustain flag. This flag is set true by SMT in a monitor if it wishes to allow the HRC entity to try to maintain hybrid mode synchronization when it detects a cycle error by continuing to source cycles.

The Maintain_flag parameter sets the value of the Maintain flag. This flag is set true by SMT in a monitor if it wishes to allow cycle master resolution in hybrid mode when two active rings are merged.

The Contend_flag parameter sets the value of the Contend flag. This flag is set true by SMT when it requires cycle control to go to the STANDBY state, from BASIC or SLAVE states, on receipt of JKRR[<rank] (i.e. a contention cycle header with a rank lower than own rank). This parameter is set true by SMT in all monitors on the ring if a requirement exists for the highest ranked monitor to always become cycle master.

The T_Hold_value parameter sets the T_Hold timeout value.

The T_Valid_value parameter sets the T_Valid timeout value.

The T_Err_value parameter sets the T_Err timeout value.

The T_Recov_value parameter sets the T_Recov timeout value.

The PA_max parameter specifies the maximum number of symbol periods between the start of a preamble and the point at which a cycle error would be signalled to cycle control if the subsequent cycle header were not received. After PA_max symbol periods without receiving a cycle, a monitor with the sustain flag set will begin to source a new cycle.

The value of PA_max depends on the degree of internal smoothing available in H-MUX. The default corresponds to the length of the maximum allowed preamble (6), plus two symbols allowance for an Elasticity Buffer quantum if the required PHY SDU Filter smoothing capacity at the maximum preamble threshold is implemented after H-MUX in the station repeat path.

All parameters of this primitive are optional. If a parameter is omitted, H-MUX shall use the most recently provided value for this parameter or, if no value has previously been provided, the default value for the parameter.

6.5.1.2 When generated

This primitive is generated by SMT whenever it requires H-MUX to reconfigure.

6.5.1.3 Effect of receipt

Receipt of this primitive shall cause H-MUX to establish the values of its address, timers, and other initialization parameters. Upon completion of this primitive, H-MUX shall generate a SM_HM_INITIALIZE_PROTOCOL.confirm.

6.5.2 SM_HM_CONTROL.request

This primitive is used by SMT to control the operation of H-MUX.

Documents
Document Sharing Hub
Full document details: ISO IEC 09314-5-1995

6.5.2.1 Semantics of the primitive

```
SM_HM_CONTROL.request        (
                             Control_Action,
                             Class_value
                             Requested_Status,
                             Requested_Start_Mode,
                             )
```

The Control_Action parameter shall include the following: Set_Class, HRC_Reset, HRC_Start, HRC_Stop, Present_Status, Begin_Loopback_Mode, or Cancel_Loopback_Mode.

The Class_value parameter specifies the value of the Class variable in HRC (default SLAVE).

The Requested_Status parameter is associated with the Present_Status action and shall indicate the status to be presented.

The Requested_Start_Mode parameter is associated with the HRC_Start action and shall take a value of either "master" or "contend". The significance of these parameters is defined in cycle control.

6.5.2.2 When generated

This primitive is generated by SMT to cause H-MUX to take the action specified by the Control_Action parameter.

6.5.2.3 Effect of receipt

If the control_action is Set_Class then the Class variable shall be set to Class_value (default SLAVE).

If the Control_Action is Reset then H-MUX shall generate the HRC_Reset signal. This shall cause all state machines, timers and counters to be reset to their initial values.

If the Control_Action is HRC_start then if H-MUX is in basic mode it shall make a transition to hybrid mode and attempt to effect hybrid synchronization. If H-MUX is in hybrid mode it shall ignore this primitive.

If the Control_Action is HRC_stop then if H-MUX is in hybrid mode it shall make a transition to basic mode. If H-MUX is in basic mode it shall ignore this primitive.

If the Control_Action is Present_Status, then H-MUX shall generate a SM_HM_STATUS.indication to SMT that includes the status indicated by the Requested_Status parameter.

If the Control_Action is Begin_Loopback_Mode, then H-MUX shall enter Loopback mode. The intent of this mode is to loop back within the H-MUX entity at a point as close as possible to the interface with PHY to permit local station testing. In this mode, H-MUX shall return symbols presented at the HP_UNITDATA.request interface on the HP_UNITDATA.indication interface. H-MUX shall present continuous Idle symbols to the PH_UNITDATA.request interface while in Loopback mode.

If the Control_Action is Cancel_Loopback_Mode, then H-MUX shall leave Loopback mode.

6.5.3 SM_HM_STATUS.indication

This primitive is generated by H-MUX to inform SMT of requested current status, or errors and significant status changes detected by H-MUX.

6.5.3.1 Semantics of the primitives

```
SM_HM_STATUS.indication      (
                             status_report
                             )
```


Documents
Document Sharing Hub
Full document details: ISO IEC 09314-5-1995

The status_report parameter shall convey the appropriate status including the following:

a) Current state of H-MUX including the current value of

Class variable
cycle control state
CCopr
CSopr
Valid
template filter states
Template Generate states (for monitors)

Optionally the current value of

C_Flag
CCrc
CSrc and CSexp
Scrub
Generate

b) Any change in the values of: Class, cycle control state, CCopr, or CSopr (other than setting CSopr = next(CSopr), template filter state or Template Generate state (for monitors).

c) Failure to establish or maintain successful operation in the slave, Standby or Resynch states (return to basic mode due to TNS expiration).

d) Receipt of a cycle header with potential duplicate rank.

e) The current value of a counter when requested, including: Received_ct, Aborted_ct, Late_ct, Sync_Error_ct, Seq_Error_ct, Header_Error_ct, Generate_ct.

f) Increment of a counter.

g) Overflow of a counter (optional).

6.5.3.2 When generated

These primitives shall be generated by H-MUX to signal the occurrence of a reportable condition, or in response to a SM_HM_CONTROL.request(present_status).

6.5.3.3 Effect of receipt

The effect of receipt of this primitive by SMT is not specified.

6.5.4 SM_HM_SAP.request

This primitive is used by SMT to change the Open template for the HI-SAPs and the HP-SAP within H-MUX.

6.5.4.1 Semantics of the primitive

```
SM_HM_SAP.request        (
                         Control_Action,
                         Requested_SAP
                         )
```

The Control_Action parameter shall include the following: Open_SAP, Close_SAP.

The Requested_SAP parameter selects the HI-SAP or HP-SAP to be modified by the Control_Action.

AVA Documents
Document Sharing Hub

Full document details: ISO IEC 09314-5-1995

6.5.4.2 When generated

This primitive is generated by SMT whenever it requires H-MUX to reconfigure its Open[HI-SAP] or Open[HP-SAP] template information. SMT may request a change in the Open template at any time; however, the Open[HI-SAP] template is only used when H-MUX is operational in a hybrid ring.

6.5.4.3 Effect of receipt

The initial and default condition is all SAPs closed.

Receipt of this primitive shall cause H-MUX to modify the Open[HI-SAP] or Open[HP-SAP] template as specified by the Requested_SAP parameter.

If the Requested_SAP parameter is HI-SAP[n], the selected HI-SAP shall be opened or closed to the local I-MAC.

If the Requested_SAP parameter is HP-SAP, the local HP-SAP shall be opened or closed to the local P-MAC.

6.5.5 SM_HM_WBC.request

This primitive is used by SMT to change the Asg[WBC] template within H-MUX. This template exists in each monitor H-MUX; however, only the template in the cycle master affects cycle programming.

6.5.5.1 Semantics of the primitive

```
SM_HM_WBC.request        (
                         Control_Action,
                         Requested_WBC
                         )
```

The Control_Action parameter shall include the following: Assign_Packet, Assign_Isochronous.

The Requested_WBC parameter selects the WBC to be modified by the Control_Action.

6.5.5.2 When generated

This primitive is generated by SMT whenever it requires H-MUX to reconfigure its Asg[WBC] template information. SMT may request a change in the programming template at any time; however the change can only be effected when H-MUX is the cycle master in a hybrid ring.

6.5.5.3 Effect of receipt

The initial and default condition of the Asg[WBC] is TK_request.

Receipt of this primitive shall cause H-MUX to modify the Asg[WBC] template in accordance with the parameters of the primitive. Upon completion of this primitive, H-MUX shall generate a SM_HM_WBC.confirm.

If the Control_Action is Assign_Isochronous, H-MUX shall set the Asg[WBC] flag corresponding to the WBC specified in the Requested_WBC parameter to ISO_request.

If the Control_Action is Assign_Packet, H-MUX shall set the Asg[WBC] flag corresponding to the WBC specified in the Requested_WBC parameter to TK_request.

6.5.6 SM_HM_WBC.confirm

This primitive is used by the H-MUX to inform SMT that the SM_HM_WBC.request is complete.

Documents
Document Sharing Hub
Full document details: ISO IEC 09314-5-1995

6.5.6.1 Semantics of the primitive

```
SM_HM_WBC.confirm        (
                         status
                         )
```

The status parameter indicates the success or failure of the SM_HM_WBC.request.

6.5.6.2 When generated

This primitive shall be generated by H-MUX upon completion of a SM_HM_WBC.request. If the H-MUX is currently the cycle master (cycle control state is Resynch or master), then this primitive shall be generated when the new template is received from the ring by H-MUX. Otherwise, this primitive shall be generated when the Asg[WBC] template has been updated.

6.5.6.3 Effect of receipt

The effect of receipt of this primitive by SMT is not specified.

6.5.7 SM_HM_CYCLE_SYNC.request

The function of this primitive is to provide 8 kHz timing information to H-MUX for use in hybrid cycle timing generation. This primitive is only used by H-MUX in a cycle master station. The capability to support this primitive is mandatory, however its provision by SMT is optional, and may depend on the availability of a frequency reference.

6.5.7.1 Semantics of the primitive

```
SM_HM_CYCLE_SYNC.request (
                         cycle_sync
                         )
```

The cycle_sync parameter shall be used to provide an 8 kHz cycle clock to H-MUX. This clock may be created internally within the H-MUX implementation or supplied to H-MUX.

Characteristics of the cycle clock shall be:

a) Nominal symbol time (UI) = 40 ns (1/UI = 25 MHz)

b) Nominal cycle time = 125 µs (microseconds)

c) Frequency accuracy < ±0,005 % (±50 ppm)

d) Phase jitter (above 4 kHz) < ±8 ns (0,4 UI pp)

e) Phase jitter (below 4 kHz) < ±240 ns (12 UI pp)

6.5.7.2 When generated

SMT sends SM_HM_CYCLE_SYNC.request to H-MUX at 125 µs intervals as defined by the master 8 kHz reference used for isochronous data within the station. This 8 kHz reference may be local or it may have been derived from some external reference such as the public digital network. If an external reference is used the signal can on occasion be lost, in which case this primitive may not be sent for a period of time until recovery of the external reference has been effected.

6.5.7.3 Effect of receipt

In a cycle master the receipt of this primitive shall cause H-MUX to lock the phase of its local 8 kHz timing to the external reference. The actual (locked) phase between the input reference, specified by the

AVA Documents Document Sharing Hub

Full document details: ISO IEC 09314-5-1995

SM_HM_CYCLE_SYNC.request primitive, and the phase of transmitted cycles is not specified. The phase may also depend on implementation requirements. In a slave station this primitive is ignored.

6.5.7.4 Additional comments

In the cycle master mode, H-MUX should be designed to tolerate both the absence of this primitive, and the receipt of this primitive following a period of absence, without any phase jumps in the cycles transmitted on the ring. If a phase jump occurs, cycle control should return to the Resynch state to resynchronize the ring.

6.6 I-MAC to CS-MUX services

This subclause specifies the services provided at the interface between the I-MAC and CS-MUX entities to allow CS-MUX to exchange CS-MUX protocol data units with peer CS-MUX entities. Since channels vary in size CS-MUX protocol data units may also vary in size.

Based on the steering map provided by SMT, I-MAC selects the currently open channels from the open WBCs delivered by H-MUX and delivers these channels to CS-MUX. In the opposite direction I-MAC receives channels from CS-MUX. The I-SAP (Isochronous service access point) is the access point, at the interface between CS-MUX and I-MAC, used to access channels. There is one I-SAP defined per channel allocated at the I-MAC. When the ring operates in basic mode, all the I-SAPs are closed. When the ring is in hybrid mode, the SMT opens and closes the appropriate I-SAPs in response to the Channel Allocation process.

The following primitives are defined:

IM_UNITDATA.request

IM_UNITDATA.indication

IM_INVALID.indication

IM_CYCLE_SYNC.indication

Each primitive includes the information that is passed between the I-MAC and CS-MUX entities.

6.6.1 IM_UNITDATA.request

This primitive defines the transfer of data from CS-MUX to the local I-MAC entity.

6.6.1.1 Semantics of the primitive

```
IM_UNITDATA.request        (
                           IM_Request (I-SAP,CS-MUX PDU)
                           )
```

The IM_Request (I-SAP,CS-MUX PDU) shall specify a unit of isochronous data associated with the corresponding channel. The size of this unit of data is a function of channel size.

6.6.1.2 When generated

CS-MUX shall send I-MAC an IM_UNITDATA.request following receipt of each IM_UNITDATA.indication primitive for that I-SAP. The time delay between corresponding IM_UNITDATA.indication and IM_UNITDATA.request primitives is implementation dependent and may be null.

Documents
Document Sharing Hub
Full document details: ISO IEC 09314-5-1995

6.6.1.3 Effect of receipt

Upon receipt of this primitive the I-MAC shall accept the CS-MUX PDU and multiplex it into the appropriate WBC for transmission to H-MUX.

6.6.2 IM_UNITDATA.indication

This primitive defines the transfer of data from the I-MAC entity to CS-MUX.

6.6.2.1 Semantics of the primitive

```
IM_UNITDATA.indication          (
                                IM_Indication (I-SAP,CS-MUX PDU)
                                )
```

The IM_Indication (I-SAP,CS-MUX PDU) shall specify a unit of isochronous data associated with the corresponding channel. The size of this unit of data is a function of channel size.

6.6.2.2 When generated

The I-MAC entity sends CS-MUX an IM_UNITDATA.indication whenever I-MAC has a CS-MUX PDU from the receive data stream available for output and the appropriate I-SAP is open. The period of time between subsequent IM_UNITDATA.indication generations will vary according to the data rate of the Isochronous channel. In basic mode this indication is never sent.

6.6.2.3 Effect of receipt

Upon receipt of this primitive, CS-MUX shall accept a CS-MUX PDU from I-MAC. Receipt of this primitive by CS-MUX shall also signify acceptance by I-MAC of the CS-MUX PDU specified by the current IM_UNITDATA.request and willingness to accept another CS-MUX PDU.

6.6.3 IM_INVALID.indication

This primitive is generated by the I-MAC and asserted to CS-MUX to indicate that I-MAC is unable to present a valid CS-MUX PDU to CS-MUX.

6.6.3.1 Semantics of the primitive

```
IM_INVALID.indication           (
                                IM_Invalid(I-SAP)
                                )
```

The IM_Invalid parameter shall indicate that I-MAC is unable to present a valid CS-MUX PDU stream to CS-MUX.

6.6.3.2 When generated

The I-MAC generates this primitive whenever it does not have a valid CS-MUX PDU to output to CS-MUX for this I-SAP. This may be due to the associated I-SAP being closed or to the receipt of a HI_INVALID.indication at the H-MUX interface.

6.6.3.3 Effect of receipt

The effect of receipt of this primitive on CS-MUX is not specified.

AVA Documents
Document Sharing Hub

Full document details: ISO IEC 09314-5-1995