INTERNATIONAL STANDARD

ISO/IEC 9316

Second edition
1995-11-01

Information technology — Small Computer System Interface-2

Technologies de l'information — Interface «Small Computer System-2»

Reference number
ISO/IEC 9316:1995(E)

AVA Documents
Document Sharing Hub

Full document details: ISO IEC 09316-1995

Contents

	Page
1 Scope	1
2 Normative references	2
3 Definitions, symbols and abbreviations	3
3.1 Definitions	3
3.2 Symbols and abbreviations	5
4 General	6
4.1 Overview	6
4.2 Conventions	7
5 Physical characteristics	8
5.1 Physical description	8
5.2 Cable requirements	8
5.2.1 Single-ended cable	8
5.2.2 Differential cable	9
5.2.3 Cable requirements for fast synchronous data transfer	9
5.3 Connector requirements	9
5.3.1 Non-shielded connector requirements	9
5.3.1.1 Non-shielded connector alternative 1 - A cable	9
5.3.1.2 Non-shielded connector alternative 2 - A cable	10
5.3.1.3 Non-shielded connector - B cable	10
5.3.2 Shielded connector requirements	15
5.3.2.1 Shielded connector alternative 1 - A cable	15
5.3.2.2 Shielded connector alternative 2 - A cable	15
5.3.2.3 Shielded connector - B cable	15
5.3.3 Connector contact assignments	20

© ISO/IEC 1995
All rights reserved. Unless otherwise specified, no part of this publication may be reproduced or utilized in any form or by any means, electronic or mechanical, including photocopying and microfilm, without permission in writing from the publisher.

ISO/IEC Copyright Office • Case postale 56 • CH-1211 Genève 20 • Switzerland

Printed in Switzerland

Documents
Document Sharing Hub

Full document details: ISO IEC 09316-1995

5.4 Electrical description 25
5.4.1 Single-ended alternative 25
5.4.1.1 Output characteristics 25
5.4.1.2 Input characteristics 25
5.4.2 Differential alternative 26
5.4.2.1 Output characteristics 26
5.4.2.2 Input characteristics 26
5.4.3 Terminator power 26
5.4.4 RESERVED lines 29
5.5 SCSI bus 30
5.6 SCSI bus signals 32
5.6.1 Signal values 33
5.6.2 OR-tied signals 33
5.6.3 Signal sources 33
5.7 SCSI bus timing 34
5.7.1 Arbitration delay 35
5.7.2 Assertion period 35
5.7.3 Bus clear delay 35
5.7.4 Bus free delay 35
5.7.5 Bus set delay 36
5.7.6 Bus settle delay 36
5.7.7 Cable skew delay 36
5.7.8 Data release delay 36
5.7.9 Deskew delay 36
5.7.10 Disconnection delay 36
5.7.11 Hold time 36
5.7.12 Negation period 36
5.7.13 Power-on to selection time 36
5.7.14 Reset to selection time 36
5.7.15 Reset hold time 37
5.7.16 Selection abort time 37
5.7.17 Selection time-out delay 37
5.7.18 Transfer period 37
5.8 Fast synchronous transfer option 37
5.8.1 Fast assertion period 37
5.8.2 Fast cable skew delay 37
5.8.3 Fast deskew delay 37
5.8.4 Fast hold time 37
5.8.5 Fast negation period 38

6 Logical characteristics 39
6.1 SCSI bus phases 39
6.1.1 BUS FREE phase 39
6.1.2 ARBITRATION phase 40
6.1.3 SELECTION phase 40
6.1.3.1 SELECTION time-out procedure 41
6.1.4 RESELECTION phase 41
6.1.4.1 RESELECTION 41
6.1.4.2 RESELECTION time-out procedure 42
6.1.5 Information transfer phases 42
6.1.5.1 Asynchronous information transfer 43
6.1.5.2 Synchronous data transfer 43
6.1.5.3 Wide data transfer 44

AVA Documents
Document Sharing Hub

Full document details: ISO IEC 09316-1995

6.1.6 COMMAND phase 46
6.1.7 Data phase 46
6.1.7.1 DATA IN phase 46
6.1.7.2 DATA OUT phase 46
6.1.8 STATUS phase 46
6.1.9 Message phase 46
6.1.9.1 MESSAGE IN phase 46
6.1.9.2 MESSAGE OUT phase 46
6.1.10 Signal restrictions between phases 47
6.2 SCSI bus conditions 47
6.2.1 Attention condition 47
6.2.2 Reset condition 48
6.2.2.1 Hard reset alternative 49
6.2.2.2 Soft reset alternative 49
6.3 SCSI bus phase sequences 50
6.4 SCSI pointers 51
6.5 Message system description 52
6.6 Messages 55
6.6.1 ABORT 55
6.6.2 ABORT TAG 55
6.6.3 BUS DEVICE RESET 56
6.6.4 CLEAR QUEUE 56
6.6.5 COMMAND COMPLETE 56
6.6.6 DISCONNECT 56
6.6.7 IDENTIFY 57
6.6.8 IGNORE WIDE RESIDUE 58
6.6.9 INITIATE RECOVERY 58
6.6.10 INITIATOR DETECTED ERROR 59
6.6.11 LINKED COMMAND COMPLETE 59
6.6.12 LINKED COMMAND COMPLETE (WITH FLAG) 59
6.6.13 MESSAGE PARITY ERROR 59
6.6.14 MESSAGE REJECT 59
6.6.15 MODIFY DATA POINTER Message 60
6.6.16 NO OPERATION 60
6.6.17 Queue tag messages 60
6.6.17.1 HEAD OF QUEUE TAG 61
6.6.17.2 ORDERED QUEUE TAG 61
6.6.17.3 SIMPLE QUEUE TAG 61
6.6.18 RELEASE RECOVERY 61
6.6.19 RESTORE POINTERS 61
6.6.20 SAVE DATA POINTER 62
6.6.21 SYNCHRONOUS DATA TRANSFER REQUEST 62
6.6.22 TERMINATE I/O PROCESS 64
6.6.23 WIDE DATA TRANSFER REQUEST 64

7 SCSI commands and status 67
7.1 Command implementation requirements 67
7.1.1 Reserved 67
7.1.2 Operation code types 67
7.2 Command descriptor block 68
7.2.1 Operation code 69
7.2.2 Logical unit number 70
7.2.3 Logical block address 70

Documents
Document Sharing Hub

Full document details: ISO IEC 09316-1995

7.2.4 Transfer length 70
7.2.5 Parameter list length 70
7.2.6 Allocation length 70
7.2.7 Control field 71
7.3 Status 71
7.4 Command examples 73
7.4.1 Single command example 73
7.4.2 Disconnect example 73
7.4.3 Linked command example 74
7.5 Command processing considerations and exception conditions 74
7.5.1 Programmable operating definition 74
7.5.2 Incorrect initiator connection 75
7.5.3 Selection of an invalid logical unit 75
7.5.4 Parameter rounding 76
7.5.5 Asynchronous event notification 76
7.5.6 Unexpected reselection 77
7.6 Contingent allegiance condition 78
7.7 Extended contingent allegiance condition 78
7.8 Queued I/O processes 79
7.8.1 Untagged queuing 79
7.8.2 Tagged queuing 79
7.8.3 Example of queued I/O process 80
7.8.3.1 Typical sequences for tagged queuing 81
7.8.3.2 Example of tagged queuing 81
7.9 Unit attention condition 83

8 All device types 84
8.1 Model for all device types 84
8.1.1 SCSI addresses 84
8.1.1.1 SCSI device address 84
8.1.1.2 Logical units 84
8.1.1.3 Target routines 84
8.1.2 Commands implemented by all SCSI devices 84
8.1.2.1 Using the INQUIRY command 85
8.1.2.2 Using the REQUEST SENSE command 85
8.1.2.3 Using the SEND DIAGNOSTIC command 85
8.1.2.4 Using the TEST UNIT READY command 85
8.2 Commands for all device types 85
8.2.1 CHANGE DEFINITION command 86
8.2.2 COMPARE command 88
8.2.3 COPY command 89
8.2.3.1 Errors detected by the managing SCSI device 90
8.2.3.2 Errors detected by a target 91
8.2.3.3 COPY function code 00h and 01h 91
8.2.3.4 COPY function code 02h 92
8.2.3.5 COPY function code 03h 93
8.2.3.6 COPY function code 04h 94
8.2.3.7 Copies with unequal block lengths 94
8.2.4 COPY AND VERIFY command 95
8.2.5 INQUIRY command 96
8.2.5.1 Standard INQUIRY data 97
8.2.5.2 Vital product data 100
8.2.6 LOG SELECT command 101

AVA Documents
Document Sharing Hub
Full document details: ISO IEC 09316-1995

8.2.7 LOG SENSE command 103
8.2.8 MODE SELECT(6) command 104
8.2.9 MODE SELECT(10) command 106
8.2.10 MODE SENSE(6) command 106
8.2.10.1 Current values 107
8.2.10.2 Changeable values 108
8.2.10.3 Default values 108
8.2.10.4 Saved values 108
8.2.10.5 Initial responses 108
8.2.11 MODE SENSE(10) command 109
8.2.12 READ BUFFER command 109
8.2.12.1 Combined header and data mode (000b) 110
8.2.12.2 Vendor-specific mode (001b) 110
8.2.12.3 Data mode (010b) 110
8.2.12.4 Descriptor mode (011b) 111
8.2.13 RECEIVE DIAGNOSTIC RESULTS command 112
8.2.14 REQUEST SENSE command 112
8.2.14.1 Sense-key specific 116
8.2.14.2 Deferred errors 117
8.2.14.3 Sense key and sense code definitions 119
8.2.15 SEND DIAGNOSTIC command 125
8.2.16 TEST UNIT READY command 126
8.2.17 WRITE BUFFER command 127
8.2.17.1 Combined header and data mode (000b) 128
8.2.17.2 Vendor-specific mode (001b) 128
8.2.17.3 Data mode (010b) 128
8.2.17.4 Download microcode mode (100b) 129
8.2.17.5 Download microcode and save mode (101b) 129
8.3 Parameters for all device types 129
8.3.1 Diagnostic parameters 129
8.3.1.1 Supported diagnostic pages 130
8.3.2 Log parameters 131
8.3.2.1 Buffer over-run/under-run page 134
8.3.2.2 Error counter pages 135
8.3.2.3 Last *n* error events page 136
8.3.2.4 Non-medium error page 136
8.3.2.5 Supported log pages 136
8.3.3 Mode parameters 137
8.3.3.1 Control mode page 140
8.3.3.2 Disconnect-reconnect page 142
8.3.3.3 Peripheral device page 144
8.3.4 Vital product data parameters 144
8.3.4.1 ISO/IEC 646 implemented operating definition page 145
8.3.4.2 ISO/IEC 646 information page 146
8.3.4.3 Implemented operating definition page 146
8.3.4.4 Supported vital product data pages 148
8.3.4.5 Unit serial number page 149

9 Direct-access devices 150
9.1 Direct-access device model 150
9.1.1 Removable medium 150
9.1.2 Logical blocks 150
9.1.3 Ready state 151

Documents
Document Sharing Hub
Full document details: ISO IEC 09316-1995

9.1.4 Initialization 151
9.1.5 Medium defects 151
9.1.6 Data cache 152
9.1.7 Reservations 153
9.1.8 Seek and rezero 154
9.1.9 Notched drives 154
9.1.10 Rotational position locking 154
9.1.11 Relative addressing 154
9.1.12 Error reporting 154
9.1.13 Examples 155
9.1.13.1 Rotating media 155
9.1.13.2 Sequential media 156
9.1.13.3 Memory media 156
9.2 Commands for direct-access devices. 157
9.2.1 FORMAT UNIT command 158
9.2.1.1 Defect list formats 162
9.2.1.2 Initialization pattern option 163
9.2.2 LOCK UNLOCK CACHE command 165
9.2.3 PRE-FETCH command 166
9.2.4 PREVENT ALLOW MEDIUM REMOVAL command 167
9.2.5 READ(06) command 168
9.2.6 READ(10) command 168
9.2.7 READ CAPACITY command 169
9.2.8 READ DEFECT DATA command 171
9.2.9 READ LONG command 173
9.2.10 REASSIGN BLOCKS command 174
9.2.11 RELEASE command 175
9.2.11.1 Logical unit release 176
9.2.11.2 Extent release 176
9.2.11.3 Third-party release 176
9.2.12 RESERVE command 177
9.2.12.1 Logical unit reservation 177
9.2.12.2 Extent reservation 177
9.2.12.3 Third-party reservation 179
9.2.12.4 Superseding reservations 180
9.2.13 REZERO UNIT command 180
9.2.14 SEARCH DATA commands 181
9.2.14.1 SEARCH DATA EQUAL command 183
9.2.14.2 SEARCH DATA HIGH command 183
9.2.14.3 SEARCH DATA LOW command 183
9.2.15 SEEK(06) and SEEK(10) commands 183
9.2.16 SET LIMITS command 184
9.2.17 START STOP UNIT command 185
9.2.18 SYNCHRONIZE CACHE command 186
9.2.19 VERIFY command 187
9.2.20 WRITE(06) command 188
9.2.21 WRITE(10) command 188
9.2.22 WRITE AND VERIFY command 189
9.2.23 WRITE LONG command 190
9.2.24 WRITE SAME command 191
9.3 Parameters for direct-access devices 192
9.3.1 Diagnostic parameters 192
9.3.1.1 Translate address page - SEND DIAGNOSTIC 192

Documents
Document Sharing Hub
Full document details: ISO IEC 09316-1995

9.3.1.2 Translate address page - RECEIVE DIAGNOSTIC 193
9.3.2 Log parameters 194
9.3.3 Mode parameters 194
9.3.3.1 Caching page 196
9.3.3.2 Flexible disk page 199
9.3.3.3 Format device page 202
9.3.3.4 Medium types supported page 205
9.3.3.5 Notch and partition page 206
9.3.3.6 Read-write error recovery page 207
9.3.3.7 Rigid disk drive geometry page 214
9.3.3.8 Verify error recovery page 215
9.4 Definitions specific to direct-access devices 217

10 Sequential-access devices 218
10.1 Sequential-access device model 218
10.1.1 Physical elements 218
10.1.2 Data storage characteristics 219
10.1.3 Partitions within a volume 221
10.1.4 Logical elements within a partition 222
10.1.5 Data buffering 223
10.1.6 Recorded object descriptors (block identifiers) 224
10.1.7 Direction and position definitions 224
10.1.8 Error reporting 225
10.2 Command descriptions for sequential-access devices 226
10.2.1 ERASE command 227
10.2.2 LOAD UNLOAD command 228
10.2.3 LOCATE command 229
10.2.4 READ command 230
10.2.5 READ BLOCK LIMITS command 232
10.2.6 READ POSITION command 233
10.2.7 READ REVERSE command 235
10.2.8 RECOVER BUFFERED DATA command 236
10.2.9 RELEASE UNIT command 237
10.2.9.1 Third-party release 237
10.2.10 RESERVE UNIT command 238
10.2.10.1 Third-party reservation 238
10.2.10.2 Superseding reservations 239
10.2.11 REWIND command 239
10.2.12 SPACE command 240
10.2.13 VERIFY command 242
10.2.14 WRITE command 243
10.2.15 WRITE FILEMARKS command 244
10.3 Parameters for sequential-access devices 246
10.3.1 Diagnostic parameters 246
10.3.2 Log parameters 246
10.3.3 Mode parameters 246
10.3.3.1 Device configuration page 250
10.3.3.2 Medium partition page(1) 253
10.3.3.3 Medium partition page(2-4) 254
10.3.3.4 Read-write error recovery page 254
10.4 Definitions specific to sequential access devices 256

11 Commands for printer devices 257

Documents
Document Sharing Hub

Full document details: ISO IEC 09316-1995

11.1 Model for printer devices 257
11.2 Commands for printer devices 258
11.2.1 FORMAT command 259
11.2.2 PRINT command 260
11.2.3 RECOVER BUFFERED DATA command 260
11.2.4 SLEW AND PRINT command 261
11.2.5 STOP PRINT command 262
11.2.6 SYNCHRONIZE BUFFER command 262
11.3 Parameters for printer devices 263
11.3.1 Diagnostic parameters 263
11.3.2 Log parameters 263
11.3.3 Mode parameters 263
11.3.3.1 Parallel printer interface page 264
11.3.3.2 Printer options page 266
11.3.3.3 Serial printer interface page 269

12 Processor devices 271
12.1 Model for processor devices 271
12.1.1 Host-to-host communication, SEND only 272
12.1.2 Host-to-host communication, SEND and RECEIVE 272
12.1.3 Host-to-special-output peripheral 272
12.1.4 Host-to-special-input peripheral 272
12.2 Commands for processor devices 273
12.2.1 RECEIVE command 273
12.2.2 SEND command 274
12.3 Parameters for processor devices 275
12.3.1 Diagnostic parameters 275
12.3.2 Log parameters 275
12.4 Definitions specific to processor devices 275

13 Write-once devices 276
13.1 Model for write-once devices 276
13.1.1 Logical blocks 276
13.1.2 Initialization 276
13.1.3 Physical medium defects 276
13.1.4 Error reporting 276
13.2 Commands for write-once devices 277
13.3 Parameters for write-once devices 279
13.4 Definitions specific to write-once devices 279

14 CD-ROM devices 280
14.1 Model for CD-ROM devices 280
14.1.1 CD-ROM media organization 280
14.1.2 CD-ROM physical data format 283
14.1.2.1 Frame format for audio 283
14.1.2.2 Sector format for data 283
14.1.2.3 Sub-channel information formats 284
14.1.3 CD Audio error reporting 285
14.1.4 CD-ROM ready condition/not ready condition 285
14.1.5 CD-ROM address reporting formats (MSF bit) 285
14.1.6 Sensing support for CD-audio commands. 286
14.1.7 Error reporting 286
14.2 Commands for CD-ROM devices 287

AVA Documents
Document Sharing Hub

Full document details: ISO IEC 09316-1995

14.2.1 PAUSE RESUME command 288
14.2.2 PLAY AUDIO(10) command 289
14.2.3 PLAY AUDIO(12) command 290
14.2.4 PLAY AUDIO MSF command 290
14.2.5 PLAY AUDIO TRACK INDEX command 292
14.2.6 PLAY AUDIO TRACK RELATIVE(10) command 293
14.2.7 PLAY AUDIO TRACK RELATIVE(12) command 294
14.2.8 READ CD-ROM CAPACITY command 294
14.2.9 READ HEADER command 296
14.2.10 READ SUB-CHANNEL command 297
14.2.10.1 Sub-Q channel data format 298
14.2.10.2 CD-ROM current position data format 302
14.2.10.3 Media catalogue number data format 302
14.2.10.4 Track international standard recording code data format 303
14.2.11 READ TOC command 305
14.3 Parameters for CD-ROM devices 307
14.3.1 Diagnostic parameters 307
14.3.2 Log parameters 307
14.3.3 Mode parameters 307
14.3.3.1 CD-ROM audio control parameters 309
14.3.3.2 CD-ROM device parameters 311
14.3.3.3 Read error recovery parameters 312
14.3.3.4 Verify error recovery parameters 318
14.4 Definitions specific to CD-ROM devices 318

15 Scanner devices 321
15.1 Model for scanner devices 321
15.2 Commands for scanner devices 322
15.2.1 GET DATA BUFFER STATUS command 323
15.2.2 GET WINDOW command 325
15.2.3 OBJECT POSITION command 329
15.2.4 READ command 331
15.2.5 SCAN command 332
15.2.6 SEND command 332
15.2.7 SET WINDOW command 333
15.3 Parameters for scanner devices 334
15.3.1 Diagnostic parameters 334
15.3.2 Log parameters 334
15.3.3 Mode parameters 335
15.3.3.1 Measurement units page 335
15.4 Definitions specific to scanner devices 337

16 Optical memory devices 338
16.1 Model for optical memory devices 338
16.1.1 Defect management 339
16.1.2 Error reporting 339
16.2 Commands for optical memory devices 340
16.2.1 ERASE(10) command 341
16.2.2 ERASE(12) command 342
16.2.3 MEDIUM SCAN command 342
16.2.4 READ(12) command 344
16.2.5 READ DEFECT DATA(12) command 345
16.2.6 READ GENERATION command 346

Documents
Document Sharing Hub
Full document details: ISO IEC 09316-1995

16.2.7 READ UPDATED BLOCK(10) command 347
16.2.8 SEARCH DATA(12) commands 348
16.2.9 SET LIMITS(12) command 348
16.2.10 UPDATE BLOCK command 349
16.2.11 VERIFY(10) command 350
16.2.12 VERIFY(12) command 351
16.2.13 WRITE(10) command 352
16.2.14 WRITE(12) command 353
16.2.15 WRITE AND VERIFY(10) command 353
16.2.16 WRITE AND VERIFY(12) command 354
16.3 Parameters for optical memory devices 355
16.3.1 Diagnostic parameters 355
16.3.2 Log parameters 355
16.3.3 Mode parameters 355
16.3.3.1 Optical memory page 357
16.4 Definitions specific to write-once and optical memory devices 358

17 Medium-changer devices 359
17.1 Medium-changer device model 359
17.1.1 Medium-changer elements 359
17.1.1.1 Medium transport elements 359
17.1.1.2 Storage elements 360
17.1.1.3 Import export elements 360
17.1.1.4 Data transfer element 360
17.1.2 SCSI addressing of medium changer devices 360
17.1.3 Data access operations using a medium changer device 361
17.1.4 Element status maintenance requirements 361
17.1.5 Volume tags 361
17.1.5.1 Volume tag format 362
17.1.5.2 Primary and alternate volume tag information 362
17.2 Commands for medium changer devices 363
17.2.1 EXCHANGE MEDIUM command 364
17.2.2 INITIALIZE ELEMENT STATUS command 365
17.2.3 MOVE MEDIUM command 366
17.2.4 POSITION TO ELEMENT command 367
17.2.5 READ ELEMENT STATUS command 368
17.2.5.1 Element status data 369
17.2.5.2 Element status page 371
17.2.5.3 Medium transport element descriptor 372
17.2.5.4 Storage element descriptor 373
17.2.5.5 Import export element descriptor 374
17.2.5.6 Data transfer element descriptor 375
17.2.6 REQUEST VOLUME ELEMENT ADDRESS command 376
17.2.7 RELEASE command 378
17.2.7.1 Logical unit release 378
17.2.7.2 Element release (optional) 378
17.2.7.3 Third party release 378
17.2.8 RESERVE command 379
17.2.8.1 Logical unit reservation 379
17.2.8.2 Element reservation (optional) 379
17.2.8.3 Third party reservation 380
17.2.8.4 Superseding reservations 381
17.2.9 SEND VOLUME TAG command 381

Documents
Document Sharing Hub
Full document details: ISO IEC 09316-1995

17.3 Parameters for medium changer devices 383
17.3.1 Diagnostic parameters 383
17.3.2 Log parameters 384
17.3.3 Mode parameters 384
17.3.3.1 Device capabilities page 385
17.3.3.2 Element address assignment page 386
17.3.3.3 Transport geometry parameters page 388
17.4 Definitions specific to medium changer devices 389

18 Communications devices 390
18.1 Communications device model 390
18.1.1 Implementation examples 391
18.1.1.1 Host-to-host communications 391
18.1.1.2 Host-to-device communications 391
18.1.1.3 Multiple role communications 391
18.2 Command descriptions for communications devices 392
18.2.1 GET MESSAGE(06) command 393
18.2.2 GET MESSAGE(10) command 393
18.2.3 GET MESSAGE(12) command 394
18.2.4 SEND MESSAGE(06) command 394
18.2.5 SEND MESSAGE(10) command 395
18.2.6 SEND MESSAGE(12) command 395
18.3 Parameters for communication devices 396
18.3.1 Diagnostic parameters 396
18.3.2 Log parameters 396
18.3.3 Mode parameters 397
18.4 Definitions specific to communications devices 398

Index 420

Annexes

A SCSI signal sequence example 399
B SCSI skew time 403
C Other SCSI standardization activities 405
D Numeric order codes 406
E Vendor identification 416

Documents
Document Sharing Hub
Full document details: ISO IEC 09316-1995

Tables

1 - Cross-reference to connector contact assignments 20
2 - Single-ended contact assignments - A cable 20
3 - Single-ended contact assignments - B cable 21
4 - Differential contact assignments - A cable 22
5 - Differential contact assignments - B cable 23
6 - Signal sources 33
7 - SCSI bus timing values 34
8 - Information transfer phases 42
9 - Message format 52
10 - Message codes 52
11 - Extended message format 53
12 - Extended message codes 54
13 - IDENTIFY message format 57
14 - IGNORE WIDE RESIDUE message format 58
15 - Ignore field definition 58
16 - MODIFY DATA POINTER 60
17 - Queue tag message format 60
18 - SYNCHRONOUS DATA TRANSFER REQUEST 62
19 - WIDE DATA TRANSFER REQUEST 64
20 - Operation code type 67
21 - Typical command descriptor block for six-byte commands 68
22 - Typical command descriptor block for ten-byte commands 68
23 - Typical command descriptor block for twelve-byte commands 68
24 - Operation code 70
25 - Control field 71
26 - Status byte 71
27 - Status byte code 72
28 - Commands in order received by target 81
29 - Commands in order of execution 81
30 - Modified by HEAD OF QUEUE TAG message 82
31 - Commands for all device types 85
32 - CHANGE DEFINITION command 86
33 - Definition parameter field 86
34 - COMPARE command 88
35 - COPY command 89
36 - COPY parameter list 89
37 - COPY function codes 90
38 - Segment descriptor for COPY function codes 00h and 01h 91
39 - Segment descriptor for COPY function code 02h 92
40 - Segment descriptor for COPY function code 03h 93
41 - Segment descriptor for COPY function code 04h 94
42 - Pad and Cat bit definition 94
43 - COPY AND VERIFY command 95
44 - INQUIRY command 96
45 - Standard INQUIRY data format 97
46 - Peripheral qualifier 97
47 - Peripheral device type 98
48 - ISO-approved version 98
49 - LOG SELECT command 101
50 - Page control field 101
51 - LOG SENSE command 103
52 - MODE SELECT(6) command 104

AVA Documents
Document Sharing Hub

Full document details: ISO IEC 09316-1995

53 - MODE SELECT(10) command 106
54 - MODE SENSE(6) command 106
55 - Page control field 107
56 - Mode page code usage for all devices 107
57 - MODE SENSE(10) command 109
58 - READ BUFFER command 109
59 - READ BUFFER mode field 110
60 - READ BUFFER header 110
61 - READ BUFFER descriptor 111
62 - Buffer offset boundary 111
63 - RECEIVE DIAGNOSTIC RESULTS command 112
64 - REQUEST SENSE command 112
65 - Error codes 70h and 71h sense data format 113
66 - Field pointer bytes 116
67 - Actual retry count bytes 116
68 - Format progress indication bytes 117
69 - Sense key (0h-7h) descriptions 119
70 - Sense key (8h-Fh) descriptions 120
71 - ASC and ASCQ assignments 121
72 - SEND DIAGNOSTIC command 125
73 - TEST UNIT READY command 126
74 - Preferred TEST UNIT READY responses 126
75 - WRITE BUFFER command 127
76 - WRITE BUFFER mode field 128
77 - Diagnostic page format 129
78 - Diagnostic page codes 130
79 - Supported diagnostic pages 130
80 - Log page format 131
81 - Log parameter 131
82 - Threshold met criteria 133
83 - Log page codes 134
84 - Parameter code field for buffer over-run/under-run counters 134
85 - Count basis definition 135
86 - Cause field definition 135
87 - Parameter codes for error counter pages 135
88 - Non-medium error event parameter codes 136
89 - Supported log pages 136
90 - Mode parameter list 137
91 - Mode parameter header(06) 137
92 - Mode parameter header(10) 137
93 - Mode parameter block descriptor 138
94 - Mode page format 139
95 - Mode page codes 140
96 - Control mode page 140
97 - Queue algorithm modifier 140
98 - Disconnect-reconnect page 142
99 - Data transfer disconnect control 143
100 - Peripheral device page 144
101 - Interface identifier codes 144
102 - Vital product data page codes 144
103 - ISO/IEC 646 implemented operating definition 145
104 - ISO/IEC 646 information page 146
105 - Implemented operating definition page 147

Documents
Document Sharing Hub
Full document details: ISO IEC 09316-1995

106 - Supported vital product data pages 148
107 - Unit serial number page 149
108 - Commands for direct-access devices 157
109 - FORMAT UNIT command 158
110 - FORMAT UNIT parameter list 159
111 - Defect list header 159
112 - FORMAT UNIT defect descriptor format and requirements 160
113 - Defect descriptor - Block format 162
114 - Defect descriptor - Bytes from index format 162
115 - Defect descriptor - Physical sector format 163
116 - Initialization pattern descriptor 163
117 - Initialization pattern modifier 164
118 - Initialization pattern type 164
119 - LOCK UNLOCK CACHE command 165
120 - PRE-FETCH command 166
121 - PREVENT ALLOW MEDIUM REMOVAL command 167
122 - READ(06) command 168
123 - READ(10) command 168
124 - READ CAPACITY command 169
125 - READ CAPACITY data 170
126 - READ DEFECT DATA command 171
127 - READ DEFECT DATA defect list 172
128 - READ LONG command 173
129 - REASSIGN BLOCKS command 174
130 - REASSIGN BLOCKS defect list 174
131 - RELEASE command 175
132 - RESERVE command 177
133 - Data format of extent descriptors 178
134 - Reservation types 178
135 - REZERO UNIT command 180
136 - SEARCH DATA commands 181
137 - SEARCH DATA parameter list 182
138 - SEEK(06) command 183
139 - SEEK(10) command 183
140 - SET LIMITS command 184
141 - START STOP UNIT command 185
142 - SYNCHRONIZE CACHE command 186
143 - VERIFY command 187
144 - WRITE(06) command 188
145 - WRITE(10) command 188
146 - WRITE AND VERIFY command 189
147 - WRITE LONG command 190
148 - WRITE SAME command 191
149 - Diagnostic page codes 192
150 - Translate address page - SEND DIAGNOSTIC 192
151 - Translate address page - RECEIVE DIAGNOSTIC 193
152 - Log page codes 194
153 - Direct-access medium-type codes 194
154 - Device specific parameter 195
155 - Mode page codes 196
156 - Caching page 196
157 - Demand read and write retention priority 197
158 - Flexible disk page 199

AVA Documents
Document Sharing Hub

Full document details: ISO IEC 09316-1995

159 - Examples of transfer rates 200
160 - Pin 34 field 201
161 - Pin 4 field 201
162 - Pin 2 field 202
163 - Format device page 202
164 - Reporting of default sector formatting support 204
165 - Reporting of changeable sector formatting support 205
166 - Medium types supported page 205
167 - Notch page 206
168 - Read-write error recovery page 207
169 - Error recovery bit definitions 208
170 - Combined error recovery parameter descriptions 209
171 - Rigid disk drive geometry page 214
172 - Rotational position locking 215
173 - Verify error recovery page 216
174 - Commands for sequential-access devices 226
175 - ERASE command 227
176 - LOAD UNLOAD command 228
177 - LOCATE command 229
178 - READ command 230
179 - READ BLOCK LIMITS command 232
180 - READ BLOCK LIMITS data 232
181 - READ POSITION command 233
182 - READ POSITION data format 233
183 - READ REVERSE command 235
184 - RECOVER BUFFERED DATA command 236
185 - RELEASE UNIT command 237
186 - RESERVE UNIT command 238
187 - REWIND command 239
188 - SPACE command 240
189 - Code field definition 240
190 - VERIFY command 242
191 - WRITE command 243
192 - WRITE FILEMARKS command 244
193 - Diagnostic page codes 246
194 - Log page codes 246
195 - Device-specific parameter 246
196 - Buffered modes 247
197 - Speed field definition 247
198 - Sequential-access density codes 249
199 - Mode page codes 249
200 - Device configuration page 250
201 - EOD formats 252
202 - Medium partition page(1) 253
203 - Medium partition page(2-4) 254
204 - Read-write error recovery page 254
205 - Commands for printer devices 258
206 - FORMAT command 259
207 - Format type 259
208 - PRINT command 260
209 - RECOVER BUFFERED DATA command 260
210 - SLEW AND PRINT command 261
211 - STOP PRINT command 262

Documents
Document Sharing Hub
Full document details: ISO IEC 09316-1995

212 - SYNCHRONIZE BUFFER command 262
213 - Diagnostic page codes 263
214 - Log page codes 263
215 - Printer device-specific parameter 263
216 - Mode page codes 264
217 - Parallel printer interface 264
218 - Parity select 264
219 - VFU control byte 265
220 - Printer options 266
221 - Font identification 266
222 - Slew mode 266
223 - Line slew 267
224 - Form slew 268
225 - Data termination option 268
226 - Serial printer interface 269
227 - Parity selection 270
228 - Pacing protocol 270
229 - Commands for processor devices 273
230 - RECEIVE command 273
231 - SEND command 274
232 - SEND command - AEN data format 274
233 - Diagnostic page codes 275
234 - Log page codes 275
235 - Commands for write-once devices 277
236 - Example mixed mode CD-ROM disc layout 281
237 - MSF address format 285
238 - Commands for CD-ROM device 287
239 - PAUSE RESUME command 288
240 - PLAY AUDIO(10) command 289
241 - PLAY AUDIO(12) command 290
242 - PLAY AUDIO MSF command 290
243 - PLAY AUDIO TRACK INDEX command 292
244 - PLAY AUDIO TRACK RELATIVE(10) command 293
245 - PLAY AUDIO TRACK RELATIVE(12) command 294
246 - READ CD-ROM CAPACITY command 294
247 - READ CAPACITY data format 295
248 - READ HEADER command 296
249 - READ HEADER data format 296
250 - CD-ROM data mode codes 297
251 - READ SUB-CHANNEL command 297
252 - Sub-channel data format codes 298
253 - Sub-Q channel data format 298
254 - Audio status codes 299
255 - ADR sub-channel Q field 300
256 - Sub-channel Q control bits 300
257 - CD-ROM current position data format 302
258 - Media catalogue number data format 302
259 - Track international standard recording code data format 303
260 - READ TOC command 305
261 - READ TOC data format 305
262 - Diagnostic page codes 307
263 - Log page codes 307
264 - CD-ROM medium type codes 307

Documents
Document Sharing Hub
Full document details: ISO IEC 09316-1995

265 - CD-ROM device-specific parameter 308
266 - CD-ROM density codes 308
267 - Mode page codes 309
268 - CD-ROM audio control parameters page 309
269 - Multiplier for LBAs 310
270 - Output port channel selection 310
271 - CD-ROM parameters page 311
272 - Inactivity timer multiplier values 311
273 - Read error recovery parameters page 312
274 - Error recovery bit settings 312
275 - CD-ROM error recovery descriptions 313
276 - Verify error recovery parameters page 318
277 - Commands for scanner devices 322
278 - GET DATA BUFFER STATUS command 323
279 - Data buffer status format 323
280 - GET WINDOW command 325
281 - Get window data header 325
282 - Window descriptor bytes 326
283 - Image composition codes 327
284 - Padding types 328
285 - Compression types and arguments 328
286 - OBJECT POSITION command 329
287 - Position function 329
288 - READ command 331
289 - Data type codes 331
290 - SCAN command 332
291 - SEND command 332
292 - SET WINDOW command 333
293 - Set window data header 333
294 - Diagnostic page codes 334
295 - Log page codes 334
296 - Mode page codes 335
297 - Measurement units page 335
298 - Basic measurement units 336
299 - Commands for optical memory devices 340
300 - ERASE(10) command 341
301 - ERASE(12) command 342
302 - MEDIUM SCAN command 342
303 - MEDIUM SCAN parameter list 343
304 - READ(12) command 344
305 - READ DEFECT DATA(12) command 345
306 - READ DEFECT DATA(12) list header 345
307 - READ GENERATION command 346
308 - Maximum generation data block 346
309 - READ UPDATED BLOCK(10) command 347
310 - SEARCH DATA(12) commands 348
311 - SET LIMITS(12) command 348
312 - UPDATE BLOCK command 349
313 - VERIFY command 350
314 - VERIFY(12) command 351
315 - WRITE(10) command 352
316 - WRITE(12) command 353
317 - WRITE AND VERIFY(10) command 353

Documents
Document Sharing Hub
Full document details: ISO IEC 09316-1995

318 - WRITE AND VERIFY(12) command 354
319 - Diagnostic page codes 355
320 - Log page codes 355
321 - Optical memory medium-type codes 355
322 - Optical memory device specific parameter 356
323 - Optical memory density codes 356
324 - Mode page codes 357
325 - Optical memory page 358
326 - Volume tag information format 362
327 - Commands for medium changer devices 363
328 - EXCHANGE MEDIUM command 364
329 - INITIALIZE ELEMENT STATUS command 365
330 - MOVE MEDIUM command 366
331 - POSITION TO ELEMENT command 367
332 - READ ELEMENT STATUS command 368
333 - Element type code 368
334 - Element status data 369
335 - Element status page 371
336 - Medium transport element descriptor 372
337 - Storage element descriptor 373
338 - Import export element descriptor 374
339 - Data transfer element descriptor 375
340 - REQUEST VOLUME ELEMENT ADDRESS command 376
341 - Volume element address header format 377
342 - RELEASE command 378
343 - RESERVE command 379
344 - Data format of element list descriptors 380
345 - SEND VOLUME TAG command 381
346 - Send volume tag action codes 381
347 - Send volume tag parameters format 382
348 - Diagnostic page codes 383
349 - Log page codes 384
350 - Mode page codes 384
351 - Device capabilities page 385
352 - Element address assignment page 386
353 - Transport geometry parameters page 388
354 - Commands for communications devices 392
355 - GET MESSAGE(06) command 393
356 - GET MESSAGE(10) command 393
357 - GET MESSAGE(12) command 394
358 - SEND MESSAGE(06) command 394
359 - SEND MESSAGE(10) command 395
360 - SEND MESSAGE(12) command 395
361 - Diagnostic page codes 396
362 - Log page codes 396
363 - Mode page codes 397
B.1 - Fast SCSI jitter budget 403
B.2 - Mapping of jitter to SCSI 403
D.1 - ASC and ASCQ assignments 406
D.2 - SCSI-2 Operation Codes 412
E.1 - Vendor identification list 416

AVA Documents
Document Sharing Hub

Full document details: ISO IEC 09316-1995

Figures

1 - 50/68-contact non-shielded high-density SCSI device connector 11
2 - 50/68-contact non-shielded high-density cable connector 12
3 - 50-contact non-shielded low-density SCSI device connector 13
4 - 50-contact non-shielded low-density cable connector 14
5 - 50/68-contact shielded high-density SCSI device connector 16
6 - 50/68-contact shielded high-density cable connector 17
7 - 50-contact shielded low-density SCSI device connector 18
8 - 50-contact shielded low-density cable connector 19
9 - Alternative 1 termination 28
10 - Alternative 2 termination for single-ended devices 28
11 - Termination for differential devices 29
12 - Differential driver protection circuit 29
13 - SCSI ID bits 30
14 - Sample SCSI configurations 31
15 - Wide SCSI byte ordering 45
16 - Phase sequences 50
17 - Simplified SCSI system 51
18 - Typical volume layout 219
19 - Typical medium track layout 219
20 - Serpentine recording example 219
21 - Parallel recording example 220
22 - Helical scan recording example 220
23 - Early-warning example 220
24 - Partitioning example - one partition per track group 221
25 - Partitioning example - one partition per two track groups 221
26 - Partitioning example - two partitions per track group 222
27 - SCSI printer model 257
28 - Illustration of element status data structure 370
A.1 - SCSI signal sequence example 402
C.1 - SCSI-3 standards structure 405

Documents
Document Sharing Hub

Full document details: ISO IEC 09316-1995

Foreword

ISO (the International Organization for Standardization) and IEC (the International Electrotechnical Commission) form the speciallized system for worldwide standardization. National bodies that are members of ISO or IEC participate in the development of International Standards through technical committees established by the respective organization to deal with particular fields of technical activity. ISO and IEC technical committees collaborate in fields of mutual interest. Other international organizations, governmental and non-governmental, in liaison with ISO and IEC, also take part in the work.

In the field of information technology, ISO and IEC have established a joint technical committee, ISO/IEC JTC 1. Draft International Standards adopted by the joint technical committee are circulated to national bodies for voting. Publication as an International Standard requires approval by at least 75 % of the national bodies casting a vote.

International Standard ISO/IEC 9316 was prepared by Joint Technical Committee ISO/IEC JTC 1, *Subcommittee SC 25, Interconnection of information technology equipment*.

This second edition cancels and replaces the first edition (ISO 9316:1989), which has been technically revised.

Annexes A to E of this International Standard are for information only.

Documents
Document Sharing Hub
Full document details: ISO IEC 09316-1995

Introduction

This International Standard constitutes a revision of and therefore replaces ISO 9316:1989, *Information processing systems – Small Computer System Interface (SCSI).*

This International Standard encompasses the following:

Clause 1	describes the scope.
Clause 2	lists the normative references.
Clause 3	provides a glossary common to the whole document.
Clause 4	provides descriptions and conventions.
Clause 5	describes the physical characteristics.
Clause 6	describes the logical characteristics of the interface.
Clause 7	describes the SCSI command and status structure.
Clause 8	specifies those commands that have a consistent meaning for all device types.
Clause 9	specifies commands for direct-access devices.
Clause 10	specifies commands for sequential-access devices.
Clause 11	specifies commands for printer devices.
Clause 12	specifies commands for processor devices.
Clause 13	specifies commands for write-once devices.
Clause 14	specifies commands for CD-ROM devices.
Clause 15	specifies commands for scanner devices.
Clause 16	specifies commands for optical memory devices.
Clause 17	specifies commands for medium changer devices.
Clause 18	specifies commands for communications devices.
Annex A	illustrates SCSI signal sequence.
Annex B	illustrates fast SCSI skew time.
Annex C	describes other SCSI standardization activities.
Annex D	contains SCSI-2 additional sense codes and operation codes in numeric order.
Annex E	contains the list of SCSI-2 vendor identifications.

The SCSI protocol is designed to provide an efficient peer-to-peer I/O bus with up to 16 devices, including one or more hosts. Data may be transferred asynchronously at rates that only depend on device implementation and cable length. Synchronous data transfers are supported at rates up to 10 mega-transfers per second. With the 32-bit wide data transfer option, data rates of up to 40 megabytes per second are possible.

SCSI-2 includes command sets for magnetic and optical disks, tapes, printers, processors, CD-ROMs, scanners, medium changers, and communications devices.

In 1985, when the first SCSI standard was being finalized several manufacturers wanted to increase the mandatory requirements of SCSI and to define further features for direct-access devices. Rather than delay the SCSI standard, an ad hoc group was formed to develop a working paper that was eventually called the Common Command Set (CCS). Many disk products were designed using this working paper.

In parallel with the development of the CCS working paper, work began on an enhanced SCSI standard which was named SCSI-2. SCSI-2 included the results of the CCS working paper and extended them to all device types. It also added caching commands, performance enhancement features, and other worthwhile functions. While SCSI-2 has gone well beyond the original SCSI standard (now referred to as SCSI-1), it retains a high degree of compatibility with SCSI-1 devices.

SCSI-2 has evolved significantly from SCSI-1 with the new document nearly three times larger. Most of the changes are additions, but several obsolete options were removed:

a) Single initiator option

b) Non-arbitrating systems option

Documents
Document Sharing Hub

Full document details: ISO IEC 09316-1995

c) The SCSI-1 alternative 1 shielded connector

d) Non-extended sense data option

e) Reservation queuing option

f) The read-only device command set.

There are several new low-level requirements:

a) Parity is now required

b) Initiators are required to provide terminator power

c) The arbitration delay was increased from 2,2 to 2,4 μs

d) Message support is now required.

Several low-level options were added:

a) Wide SCSI (up to 32 bits wide using a second cable)

b) Fast SCSI (synchronous data transfers of up to 10 mega-transfers per second)

c) Command queuing (up to 256 commands per initiator per logical unit)

d) High-density connector alternatives were added

e) Asynchronous event notification

f) Extended contingent allegiance.

New command sets were added including:

a) CD-ROM (replaces read-only device)

b) Scanner device

c) Optical memory device (provides for write-once, read-only, and erasable media)

d) Medium changer device

e) Communications device

All command sets were enhanced:

a) Device models were added

b) Extended sense was expanded

c) The INQUIRY data was expanded

d) The MODE SELECT and MODE SENSE commands were paged for all device types

e) The CHANGE DEFINITION, LOG SELECT, LOG SENSE, READ BUFFER, and WRITE BUFFER commands were added for all device types

f) The COPY command definition was expanded to include inexact block size handling and an image copy option

g) The direct-access device command set was enhanced to add cache management, several new commands and to provide more initiator control over defect management

h) The sequential-access device command set was enhanced to add a partitioned media concept

i) The printer device command set was enhanced by adding several mode pages

j) The write-once (optical) device command set was enhanced by adding several new commands plus extending several command descriptor blocks to twelve bytes to accommodate larger transfer lengths.

Documents Document Sharing Hub

Full document details: ISO IEC 09316-1995

Documents
Document Sharing Hub

Full document details: ISO IEC 09316-1995

Information technology - Small Computer System Interface-2

1 Scope

This International Standard defines an input/output bus for interconnecting computers and peripheral devices. It defines extensions to the Small Computer System Interface (ISO 9316:1989), referred to herein as SCSI-1. It also provides more complete standardization of the previously defined command sets. It includes the necessary specification of the mechanical, electrical, and functional characteristics of the interface to allow inter-operability of conforming devices. This International Standard is referred to herein as SCSI-2. The term SCSI is used wherever it is not necessary to distinguish between the two versions.

Documents
Document Sharing Hub

Full document details: ISO IEC 09316-1995

2 Normative references

The following standards contain provisions which, through reference in this text, constitute provisions of this International Standard. At the time of publication, the editions indicated were valid. All standards are subject to revision, and parties to agreements based on this International Standard are encouraged to investigate the possibility of applying the most recent editions of the standards indicated below. Members of IEC and ISO maintain registers of currently valid standards.

ISO/IEC 8482:1993, *Information technology — Telecommunications and information exchange between systems — Twisted pair multipoint interconnections.*

ISO/IEC 10149:1989[1], *Information technology — Data interchange on read-only 120 mm optical data disks (CD-ROM).*

ISO/IEC 10222:—[2], *Information processing systems — Enhanced Small Device Interface.*

IEC 908:1987, *Compact disc digital audio system.*

1) Currently under revision.

2) To be published.

Documents
Document Sharing Hub

Full document details: ISO IEC 09316-1995

3 Definitions, symbols and abbreviations

3.1 Definitions

For the purposes of this International Standard, the following definitions apply.

3.1.1 active I/O process: An I/O process that is presently in execution (not queued).

3.1.2 byte: Indicates an 8-bit construct.

3.1.3 command descriptor block (CDB): The structure used to communicate commands from an initiator to a target.

3.1.4 command queue: The queue used to store the queued I/O processes (see 7.8).

3.1.5 connect: The initiator function that selects a target to establish a nexus and to start an I/O process. The connection that results is an initial connection.

3.1.6 connection: An initial connection or reconnection. A connection can only occur between one initiator and one target.

3.1.7 contact: The electrically-conductive portion of a connector associated with a single conductor in a cable.

3.1.8 contingent allegiance: A condition typically generated by a CHECK CONDITION status during which a target preserves sense data (see 7.6).

3.1.9 current I/O process: The I/O process that is presently connected on the SCSI bus.

3.1.10 disconnect: The action that occurs when an SCSI device releases control of the SCSI bus, allowing it to go to the BUS FREE phase.

3.1.11 extended contingent allegiance: A condition generated by an INITIATE RECOVERY message to assist in extended error recovery procedures in multi-initiator systems (see 7.7).

3.1.12 field: A group of one or more contiguous bits.

3.1.13 host adapter: A device which connects between a host system and the SCSI bus. The device usually performs the lower layers of the SCSI protocol and normally operates in the initiator role. This function may be integrated into the host system.

3.1.14 initial connection: An initial connection is the result of a connect and it exists from the assertion of the BSY signal in a SELECTION phase until the next BUS FREE phase occurs.

3.1.15 initiator: An SCSI device that requests an I/O process to be performed by another SCSI device (a target).

3.1.16 invalid: An illegal (reserved) or unsupported field or code value.

3.1.17 I/O process: An I/O process consists of one initial connection and zero or more reconnections, all pertaining to a single command or a group of linked commands. More specifically, the connection(s) pertain to a nexus in which zero or more command descriptor blocks are transferred. An I/O process begins with the establishment of a nexus. An I/O process normally ends with the BUS FREE phase following successful transfer of a COMMAND COMPLETE or a RELEASE RECOVERY message. An I/O process also ends with the BUS FREE phase following an ABORT, ABORT TAG, BUS DEVICE RESET, CLEAR QUEUE message, or a hard RESET condition, or an unexpected disconnect occurs.

AVA Documents Document Sharing Hub
Full document details: ISO IEC 09316-1995

3.1.18 I_T nexus: A nexus which exists between an initiator and a target.

3.1.19 I_T_L nexus: A nexus which exists between an initiator, a target, and a logical unit. This relationship replaces the prior I_T nexus.

3.1.20 I_T_R nexus: A nexus which exists between an initiator, a target, and a target routine. This relationship replaces the prior I_T nexus.

3.1.21 I_T_x nexus: A nexus which is either an I_T_L or I_T_R nexus.

3.1.22 I_T_L_Q nexus: A nexus between an initiator, a target, a logical unit, and a queue tag following the successful receipt of one of the queue tag messages. This relationship replaces the prior I_T_L nexus.

3.1.23 I_T_x_y nexus: A nexus which is either an I_T_x or I_T_L_Q.

3.1.24 logical block: A unit of data supplied or requested by an initiator.

3.1.25 logical unit: A physical or virtual peripheral device addressable through a target.

3.1.26 logical unit number: An encoded three-bit identifier for the logical unit.

3.1.27 mandatory: The referenced item is required to claim compliance with this International Standard.

3.1.28 nexus: A relationship that begins with the establishment of an initial connection and ends with the completion of the I/O process. The relationship may be restricted to specify a single logical unit or target routine by the successful transfer of an IDENTIFY message. The relationship may be further restricted by the successful transfer of a queue tag message.

3.1.29 one: A true signal value or a true condition of a variable.

3.1.30 optional: The referenced item is not required to claim compliance with this International Standard. Implementation of an optional item must be as defined in this International Standard.

3.1.31 page: Several commands use regular parameter structures that are referred to as pages. These pages are identified with a value known as a page code.

3.1.32 peripheral device: A physical peripheral device that can be attached to an SCSI device, which connects to the SCSI bus. The peripheral device and the SCSI device (peripheral controller) may be physically packaged together. Often there is a one-to-one mapping between peripheral devices and logical units, but this is not required. Examples of peripheral devices are: magnetic disks, printers, optical disks, and magnetic tapes.

3.1.33 queue tag: The value associated with an I/O process that uniquely identifies it from other queued I/O processes in the logical unit for the same initiator.

3.1.34 queued I/O process: An I/O process that is in the command queue.

3.1.35 reconnect: The act of reviving a nexus to continue an I/O process. A target reconnects to an initiator by using the RESELECTION and MESSAGE IN phases after winning arbitration. An initiator reconnects to a target by using the SELECTION and MESSAGE OUT phases after winning arbitration (see 7.5.2).

3.1.36 reconnection: A reconnection is the result of a reconnect and it exists from the assertion of the BSY signal in a SELECTION or RESELECTION phase until the next BUS FREE phase occurs.

3.1.37 reserved: Identifies bits, fields, and code values that are set aside for future standardization.

Documents
Document Sharing Hub

Full document details: ISO IEC 09316-1995

3.1.38 SCSI address: The hex representation of the unique address (0-15) assigned to an SCSI device. This address would normally be assigned and set in the SCSI device during system installation.

3.1.39 SCSI ID: The bit-significant representation of the SCSI address referring to one of the signal lines DB(7-0).

3.1.40 SCSI device: A host adapter or a target controller that can be attached to the SCSI bus.

3.1.41 signal assertion: The act of driving a signal to the true state.

3.1.42 signal negation: The act of driving a signal to the false state or allowing the cable terminators to bias the signal to the false state (by placing the driver in the high impedance condition).

3.1.43 signal release: The act of allowing the cable terminators to bias the signal to the false state (by placing the driver in the high impedance condition).

3.1.44 status: One byte of information sent from a target to an initiator upon completion of each command.

3.1.45 target: An SCSI device that performs an operation requested by an initiator.

3.1.46 target routine: A target routine is an I/O process directed to a target, and not to a logical unit (see 6.6.7).

3.1.47 third-party: When used in reference to COPY commands, third-party means a COPY command issued to one device to perform a copy operation between two other devices. When used in reference to RESERVE, or RELEASE commands, third-party means a reservation made on behalf of another device (e.g. A processor device requests that a direct-access device reserve itself for exclusive use by a sequential-access device).

3.1.48 unexpected disconnect: A disconnection that occurs as a result of an exception condition (see 6.1.1).

3.1.49 vendor-specific (VS): Something (e.g. a bit, field, code value, etc.) that is not defined by this International Standard and may be used differently in various implementations.

3.1.50 zero: A false signal value or a false condition of a variable.

3.2 Symbols and abbreviations

AEN Asynchronous event notification (see 7.5.5)
AWG American Wire Gauge
LSB Least significant bit
LUN Logical unit number
MSB Most significant bit
SCSI Either SCSI-1 or SCSI-2
SCSI-1 The Small Computer System Interface (ISO 9316:1989)
SCSI-2 The Small Computer System Interface - 2 (ISO/IEC 9316:1995)

AVA Documents5 Document Sharing Hub

Full document details: ISO IEC 09316-1995

4 General

4.1 Overview

SCSI is a local !/O bus that can be operated over a wide range of data rates. The primary objective of the interface is to provide host computers with device independence within a class of devices. Thus, different disk drives, tape drives, printers, optical media drives, and other devices can be added to the host computers without requiring modifications to generic system hardware or software. Provision is made for the addition of special features and functions through the use of vendor unique fields and codes. Reserved fields and codes are provided for future standardization.

A second key objective of SCSI-2 is to provide compatibility with those SCSI-1 devices that support bus parity and that meet conformance level 2 of SCSI-1. While some previously vendor unique commands and parameters have been defined by the SCSI-2 standard, devices meeting SCSI-1 and SCSI-2 can co-exist on the same bus. It is intended that those operating systems providing support for both command sets be able to operate in environments mixing SCSI-1 and SCSI-2 devices. Properly ^Sonforming SCSI-1 devices, both initiators and targets, should respond in an acceptable manner to reject SCSI-2 protocol extensions. All SCSI-2 protocol extensions are designed to be permissive of such rejections and to allow the SCSI-1 device to continue operation without requiring the use of the extension.

A third key objective of SCSI-2 is to move device-dependent intelligence out to the SCSI-2 devices. The command set definitions allow a sophisticated operating system to obtain all required initialization information from the attached SCSI-2 devices. The formalized sequence of requests identify the type of attached SCSI-2 device, the characteristics of the device, and all the changeable parameters supported by the device. Further requests can determine the readiness of the device to operate, the types of media supported by the device, and all other pertinent system information. Those parameters not required by the operating system for operation, initialization, or system tuning are not exposed to the SCSI-2 interface, but are managed by the SCSI-2 device itself.

The interface uses logical rather than physical addressing for all data blocks. For direct-access devices, each logical unit may be interrogated to determine how many blocks it contains. A logical unit may coincide with all or part of a peripheral device.

The interface protocol includes provision for the connection of multiple initiators (SCSI devices capable of initiating an operation) and multiple targets (SCSI devices capable of responding to a request to perform an operation). Distributed arbitration (i.e. bus-contention logic) is built into the architecture of SCSI. A priority system awards interface control to the highest priority SCSI device that is contending for use of the bus. The time to complete arbitration is independent of the number of devices that are contending and can be completed in less than 10 μs.

There are two electrical alternatives: single-ended and differential. Single-ended and differential devices are electrically incompatible and can not be mixed on the same physical bus.

Provision is made for cable lengths up to 25 m using differential drivers and receivers. A single-ended driver and receiver configuration is defined for cable lengths of up to 6 m and is primarily intended for applications within a cabinet.

Arbitration is defined to permit multiple initiators and to permit concurrent I/O operations. All SCSI devices are required to be capable of operating with the defined asynchronous transfer protocol. In addition, an optional synchronous transfer protocol is defined. A message protocol for control of the interface is also specified. In most cases, messages are not directly apparent to the host computer software.

Commands are classified as mandatory, optional, or vendor-specific. SCSI devices are required to implement all mandatory commands defined for the appropriate device type and may implement other commands as well. SCSI devices contain commands that facilitate the writing of self-configuring software drivers that can discover all necessary attributes without prior knowledge of specific peripheral characteristics (such as storage capacity). Many commands

Documents
Document Sharing Hub
Full document details: ISO IEC 09316-1995

also implement a very large logical block address space (2^{32} blocks), although some commands implement a somewhat smaller logical block address space (2^{21} blocks).

Starting with clause 8 and for each clause on a specific device type, the clause is constructed of at least four subclauses. The first subclause is the model for the device type. The model establishes the framework for interpreting the commands for the device type. The attributes and capabilities of the device type are discussed and examples are given. The second subclause defines the commands applicable to the device type. The third subclause defines the parameters applicable to the device type. These are the diagnostic parameters, log parameters, mode parameters and vital product data parameters that are transmitted as part of the appropriate commands. Most of the parameters are formatted into pages. The fourth subclause gives the definition of terms that apply specifically to that device type.

Starting with clause 9 the commands in each of these clauses are unique to the device type, or they have interpretations, fields, or features that are specific for the device type. Thus, for example, although the WRITE command is used for several device types, it has a somewhat different form for each type, with different parameters and meanings. Therefore, it is specified separately for each device type.

4.2 Conventions

Certain words and terms used in this International Standard have a specific meaning beyond the normal English meaning. These words and terms are defined either in clause 3 or in the text where they first appear. Names of signals, phases, messages, commands, statuses, sense keys, additional sense codes, and additional sense code qualifiers are in all uppercase (e.g. REQUEST SENSE). Lower-case is used for words having the normal English meaning.

Fields containing only one bit are usually referred to as the name bit instead of the name field.

Numbers that are not immediately followed by lower-case b or h are decimal values.

Numbers immediately followed by lower-case b (xxb) are binary values.

Numbers immediately followed by lower-case h (xxh) are hexadecimal values.

Documents
Document Sharing Hub
Full document details: ISO IEC 09316-1995

5 Physical characteristics

This clause contains the physical definition of SCSI-2. The connectors, cables, signals, terminators, and bus timing values needed to implement the interface are covered.

5.1 Physical description

SCSI devices are daisy-chained together using a common 50-conductor A cable and, optionally, a 68-conductor B cable. Both ends of each cable are terminated. All signals are common between all SCSI devices on the A cable. In systems that employ the wide SCSI option, wide SCSI devices additionally connect to the B cable. Various width SCSI devices may be mixed.

NOTE 1 An alternate 16-bit single-cable solution and an alternate 32-bit solution is being defined and the B cable definition will be removed in a future version of SCSI.

Two driver/receiver alternatives are specified:

a) Single-ended drivers and receivers, which allow a maximum cable length of 6 m (primarily for connection within an enclosure).
b) Differential drivers and receivers, which allow a maximum cable length of 25 m.

The single-ended and differential alternatives are mutually exclusive on the same physical bus.

NOTE 2 Use of single-ended drivers and receivers with the fast synchronous data transfer option is not recommended.

5.2 Cable requirements

The characteristic impedance of the cable should be no less than 90 Ω and no greater than 140 Ω. The characteristic impedance of the cable used when implementing the fast synchronous data transfer option is defined in 5.2.3.

NOTE 3 There are successful single-ended implementations using cables with less than 90 Ω characteristic impedance. However, system integrity in single-ended implementations is improved when the characteristic impedance of the cable is greater than 90 Ω. Cable parameters other than characteristic impedance are critical to system integrity. Alternative cable parameters are being investigated as a part of a future version of SCSI.

A minimum conductor size of 0,080 42 mm^2 (28 AWG) should be used to minimize noise effects and ensure proper distribution of terminator power. A smaller conductor size may be used for signals other than terminator power.

NOTES
4 To minimize discontinuities and signal reflections, cables of different impedances should not be used in the same bus. Implementations may require trade-offs in shielding effectiveness, cable length, the number of loads, transfer rates, and cost to achieve satisfactory system operation.
5 To minimize discontinuities due to local impedance variation, a flat cable should be spaced at least 1,27 mm (0,050 in) from other cables, any other conductor, or the cable itself when the cable is folded.
6 Regulatory agencies may require use of larger wire size.

5.2.1 Single-ended cable

A 50-conductor flat cable or 25-signal twisted-pair cable shall be used for the A cable. A 68-conductor flat cable or 34-signal twisted-pair cable shall be used for the B cable if the wide SCSI option is implemented. The maximum cumulative cable length shall be 6,0 m. If twisted-pair cables are used, then twisted pairs in the cable shall be wired to physically opposing contacts in the connector.

A stub length of no more than 0,1 m is allowed off the mainline interconnection within any connected equipment or from any connected point.

NOTE 7 Stub clustering should be avoided. Stubs should be spaced at least 0,3 m apart.

AVA Documents
Document Sharing Hub
Full document details: ISO IEC 09316-1995

SCSI bus termination shall be at each end of the cable and may be internal to the SCSI devices that are at the ends of the cable.

5.2.2 Differential cable

A 50-conductor flat cable or 25-signal twisted-pair cable shall be used for the A cable. A 68-conductor flat cable or 34-signal twisted-pair cable shall be used for the B cable if the wide SCSI option is implemented. The maximum cumulative cable length shall be 25 m. If twisted-pair cables are used, then twisted pairs in the cable shall be wired to physically opposing contacts in the connector.

A stub length of no more than 0,2 m is allowed off the mainline interconnection within any connected equipment or from any connected point.

SCSI bus termination shall be at each end of the cable and may be internal to the SCSI devices that are at the ends of the cable.

NOTE 8 The use of twisted pair cable (either twisted-flat or discrete wire twisted pairs) is strongly recommended. Without twisted pairs, even at slow data rates and very short distances, crosstalk between adjacent signals causes spurious pulses with differential signals.

5.2.3 Cable requirements for fast synchronous data transfer

In systems which use the fast synchronous data transfer option (see 5.8), the A and B cables should meet the conductor size recommendation in 5.2. The cable should have an overall shield suitable for termination in a shielded connector.

In such systems, the cables shall have the following electrical characteristics:

Characteristic impedance:	90 Ω to 132 Ω
Signal attenuation:	0,095 dB maximum per metre at 5 Mhz
Pair-to-pair propagation delay delta:	0,20 ns maximum per metre
DC resistance:	0,230 Ω maximum per metre at 20°C

5.3 Connector requirements

Two types of connectors are defined: non-shielded and shielded. The non-shielded connectors are typically used for in-cabinet applications. Shielded connectors are typically used for external applications where electromagnetic compatibility (EMC) and electrostatic discharge (ESD) protection may be required. Either type of connector may be used with the single-ended or differential drivers.

5.3.1 Non-shielded connector requirements

Two non-shielded connector alternatives are specified for the A cable and one non-shielded connector is specified for the B cable.

5.3.1.1 Non-shielded connector alternative 1 - A cable

The alternative 1 non-shielded high-density SCSI device connector for the A cable (see figure 1) shall be a 50-conductor connector consisting of two rows of 25 female contacts with adjacent contacts 1,27 mm (0,05 in) apart. The non-mating portion of the connector is shown for reference only.

The alternative 1 non-shielded high-density cable connector for the A cable (see figure 2) shall be a 50-conductor connector consisting of two rows of 25 male contacts with adjacent contacts 1,27 mm (0,05 in) apart. The non-mating portion of the connector is shown for reference only.

AVA Documents Document Sharing Hub

Full document details: ISO IEC 09316-1995

5.3.1.2 Non-shielded connector alternative 2 - A cable

The alternative 2 non-shielded low-density SCSI device connector for the A cable (see figure 3) shall be a 50-conductor connector consisting of two rows of 25 male pins with adjacent pins 2,54 mm (0,1 in) apart. A shroud and header body should be used. The non-mating portion of the connector is shown for reference only.

The alternative 2 non-shielded low-density cable connector for the A cable (see figure 4) shall be a 50-conductor connector consisting of two rows of 25 female contacts with adjacent contacts 2,54 mm (0,1 in) apart. It is recommended that keyed connectors be used.

5.3.1.3 Non-shielded connector - B cable

The non-shielded high-density SCSI device connector for the B cable (see figure 1) shall be a 68-conductor connector consisting of two rows of 34 female contacts with adjacent contacts 1,27 mm (0,05 in) apart. The non-mating portion of the connector is shown for reference only.

The non-shielded high-density cable connector for the B cable (see figure 2) shall be a 68-conductor connector consisting of two rows of 34 male contacts with adjacent contacts 1,27 mm (0,05 in) apart. The non-mating portion of the connector is shown for reference only.

Documents
Document Sharing Hub

Full document details: ISO IEC 09316-1995

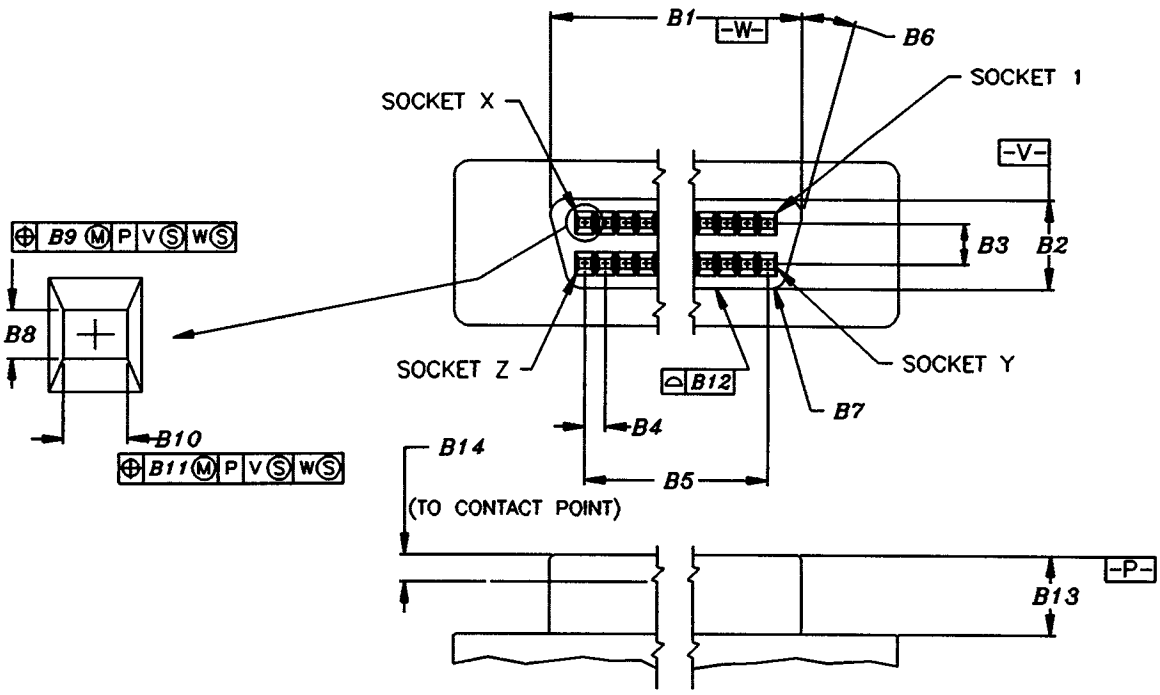

Dimensions	50 Position		68 Position	
	mm	in	mm	in
B1	34,70	1,366	46,13	1,816
B2	5,54	0,218	5,54	0,218
B3	2,54	0,100	2,54	0,100
B4	1,27	0,050	1,27	0,050
B5	30,48	1,200	41,91	1,650
B6	15°	15°	15°	15°
B7	1,00 R	0,039 R	1,00 R	0,039 R
B8	0,61±0,05	0,024±0,002	0,61±0,05	0,024±0,002
B9	0,15	0,006	0,15	0,006
B10	0,86±0,10	0,034±0,004	0,86±0,10	0,034±0,004
B11	0,15	0,006	0,15	0,006
B12	0,05	0,002	0,05	0,002
B13	5,00±0,13	0,197±0,005	5,00±0,13	0,197±0,005
B14	1,75 max.	0,069 max.	1,75 max.	0,069 max.
Socket X	25		34	
Socket Y	26		35	
Socket Z	50		68	

NOTE: Dimensions *B8* and *B10* are the opening in the dielectric. The socket contacts (not shown) fit wthin the opening.

Figure 1 - 50/68-contact non-shielded high-density SCSI device connector (A cable/B cable)

Documents Document Sharing Hub
Full document details: ISO IEC 09316-1995

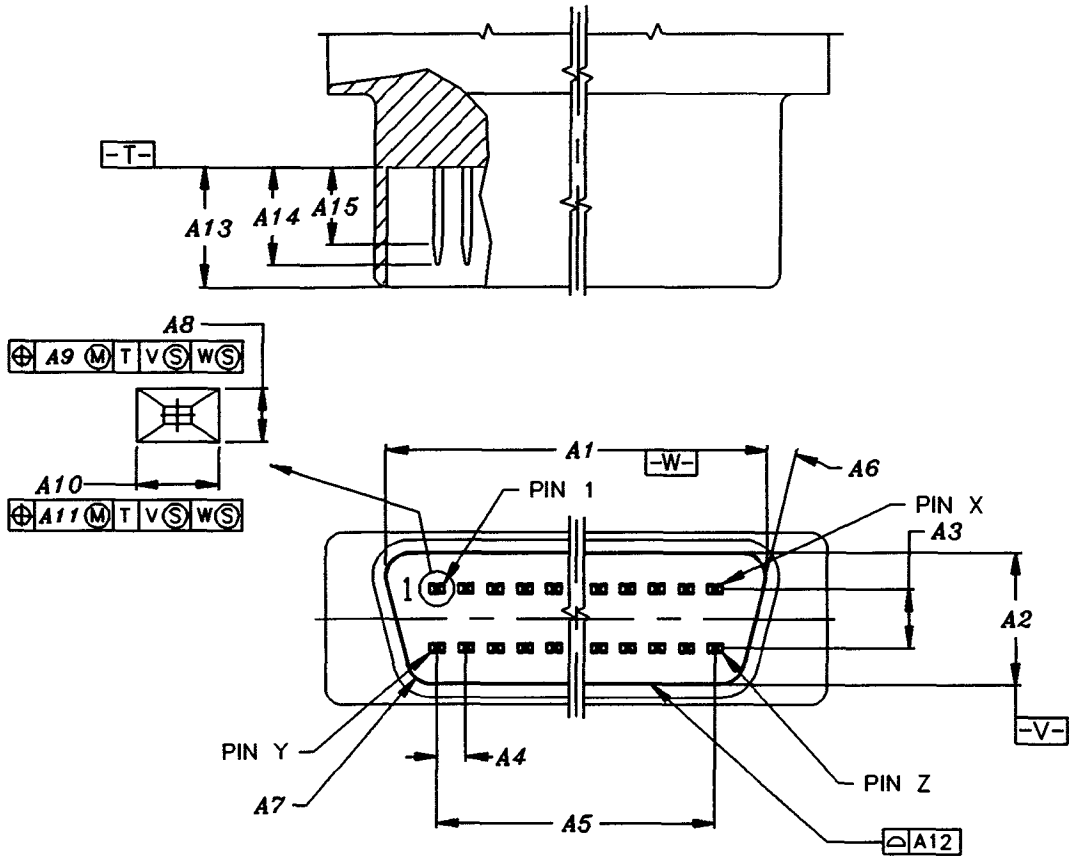

Dimensions	50 Position		68 Position	
	mm	in	mm	in
A1	34,85	1,372	46,28	1,822
A2	5,69	0,224	5,69	0,224
A3	2,54	0,100	2,54	0,100
A4	1,27	0,050	1,27	0,050
A5	30,48	1,200	41,91	1,650
A6	15°	15°	15°	15°
A7	1,04 R	0,041 R	1,04 R	0,041 R
A8	0,40± 0,010	0,0156± 0,0004	0,40± 0,010	0,0156± 0,0004
A9	0,23	0,009	0,23	0,009
A10	0,60± 0,03	0,024± 0,001	0,60± 0,03	0,024± 0,001
A11	0,23	0,009	0,23	0,009
A12	0,05	0,002	0,05	0,002
A13	5,15± 0,15	0,203± 0,006	5,15± 0,15	0,203± 0,006
A14	4,39 max.	0,173 max.	4,39 max.	0,173 max.
A15	3,02 min.	0,119 min.	3,02 min.	0,119 min.
Pin X	25		34	
Pin Y	26		35	
Pin Z	50		68	

Figure 2 - 50/68-contact non-shielded high-density cable connector (A cable/B cable)

Documents
Document Sharing Hub
Full document details: ISO IEC 09316-1995

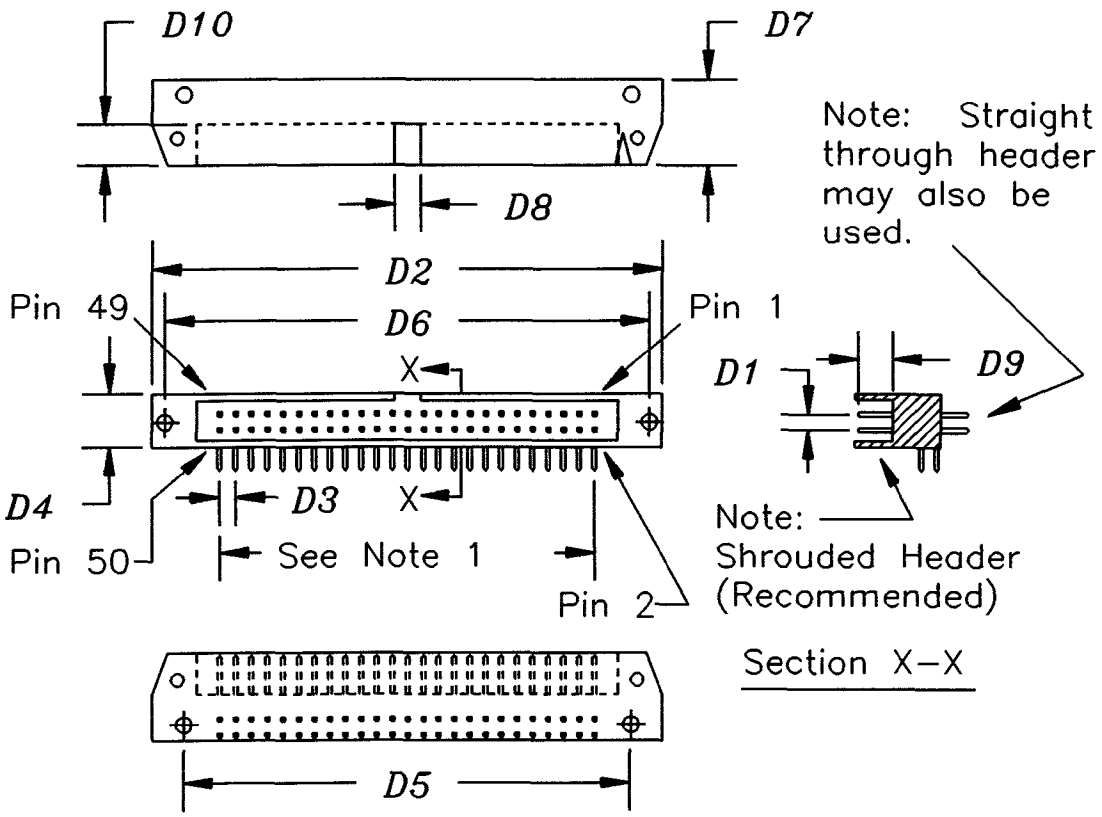

Dimension	mm	in	Comments
D1	2,54	0,100	
D2	82,80	3,260	Reference Only
D3	2,54	0,100	
D4	8,89	0,350	Reference Only
D5	72,64	2,860	Reference Only
D6	78,74	3,100	Reference Only
D7	13,94	0,549	Reference Only
D8	4,19± 0,25	0,165± 0,010	
D9	6,09	0,240	
D10	6,60	0,260	Reference Only

NOTES

1 Two rows of twenty five contacts on 2,540 mm (0,100 in) spacing = 60,960 mm (2,400 in).

2 Tolerances ±0,127 mm (0,005 in) non–cumulative, unless specified otherwise.

Figure 3 - 50-contact non-shielded low-density SCSI device connector (A cable)

Documents Document Sharing Hub
Full document details: ISO IEC 09316-1995

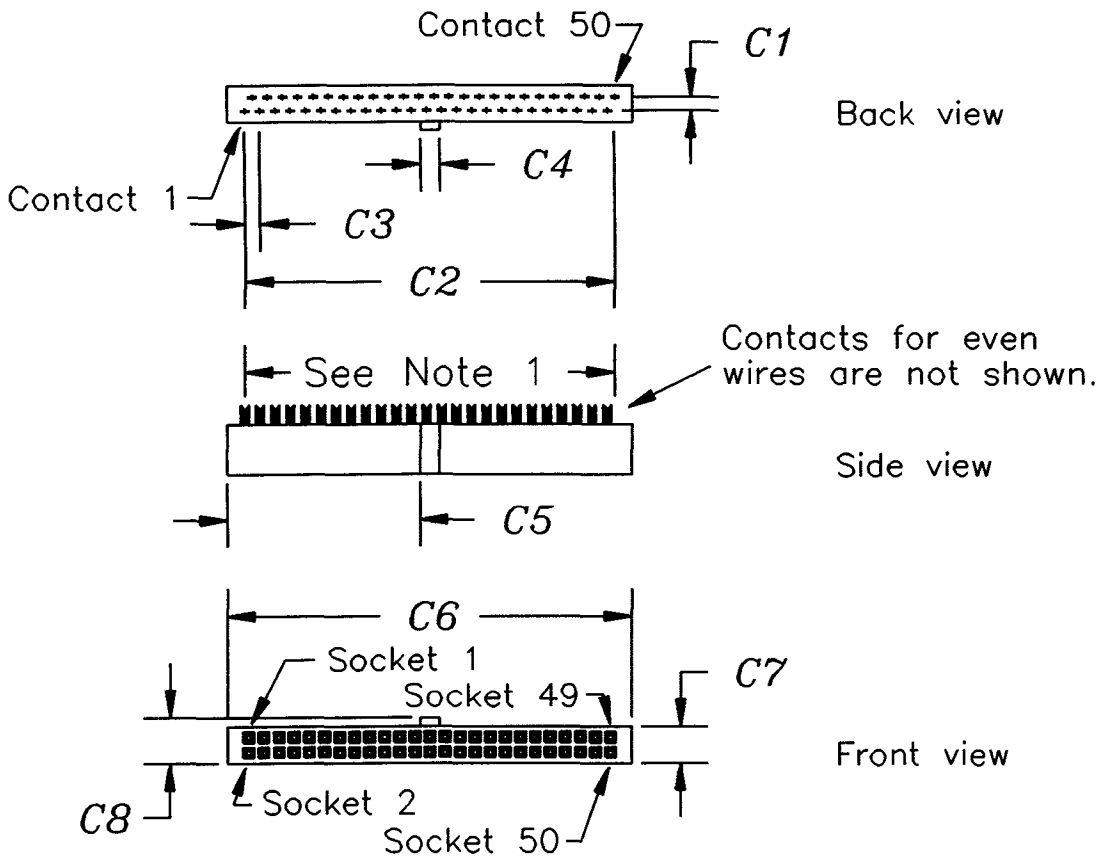

Dimensions	mm	in	Comments
C1	2,54	0,100	
C2	60,96	2,400	
C3	2,54	0,100	
C4	3,30	0,130	
C5	32,38	1,275	
C6	68,07	2,680	
C7	6,10	0,240	
C8	7,62	0,300	Maximum

NOTES

1 Fifty contacts on 1,270 mm (0,050 in) staggered spacing = 62,230 mm (2,450 in) [reference only].

2 Tolerances ±0,127 mm (0,005) non-cumulative, unless specified otherwise.

3 Connector cover and strain relief are optional.

Figure 4 - 50-contact non-shielded low-density cable connector (A cable)

Documents
Document Sharing Hub
Full document details: ISO IEC 09316-1995

5.3.2 Shielded connector requirements

Two shielded connector alternatives are specified for the A cable and one shielded connector is specified for the B cable. The connector shielding system should provide a d.c. resistance of less than 10 mΩ from the cable shield at its termination point to the SCSI device enclosure.

In order to support daisy-chain connections, SCSI devices that use shielded connectors should provide two shielded device connectors on the device enclosure. These two connectors may be wired one-to-one with a stub to the SCSI device's drivers and receivers provided the maximum stub length is not violated. Alternatively, two cables may be run from the two shielded connectors to the drivers and receivers so that the maximum stub length is not violated. The length of the cable within the device enclosure is included when calculating the total cable length of the SCSI bus.

NOTE 9 SCSI-1 defined three shielded connector systems in an annex. The alternative 1 shielded connector of SCSI-1 has been replaced by a high-density connector in this International Standard. The alternative 2 shielded connector remains unchanged. The EUROCARD boxes shielded connector system of SCSI-1 has been deleted in this International Standard.

5.3.2.1 Shielded connector alternative 1 - A cable

The shielded high-density SCSI device connector for the A cable (see figure 5) is a 50-conductor connector consisting of two rows of 25 female contacts with adjacent contacts 1,27 mm (0,05 in) apart. The non-mating portion of the connector is shown for reference only.

The shielded high-density cable connector for the A cable (see figure 6) is a 50-conductor connector consisting of two rows of 25 male contacts with adjacent contacts 1,27 mm (0,05 in) apart. The non-mating portion of the connector is shown for reference only.

5.3.2.2 Shielded connector alternative 2 - A cable

The shielded low-density device connector for the A cable (see figure 7) is a 50-conductor connector consisting of two rows of ribbon contacts spaced 2,16 mm (0,085 in) apart. The non-mating portion of the connector is shown for reference only.

The shielded low-density cable connector for the A cable (see figure 8) is a 50-conductor connector consisting of two rows of ribbon contacts spaced 2,16 mm (0,085 in) apart. The non-mating portion of the connector is shown for reference only.

5.3.2.3 Shielded connector - B cable

The shielded high-density SCSI device connector for the B cable (see figure 5) is a 68-conductor connector consisting of two rows of 34 female contacts with adjacent contacts 1,27 mm (0,05 in) apart. The non-mating portion of the connector is shown for reference only.

The shielded high-density cable connector for the B cable (see figure 6) is a 68-conductor connector consisting of two rows of 34 male contacts with adjacent contacts 1,27 mm (0,05 in) apart. The non-mating portion of the connector is shown for reference only.

AVA Documents Document Sharing Hub

Full document details: ISO IEC 09316-1995

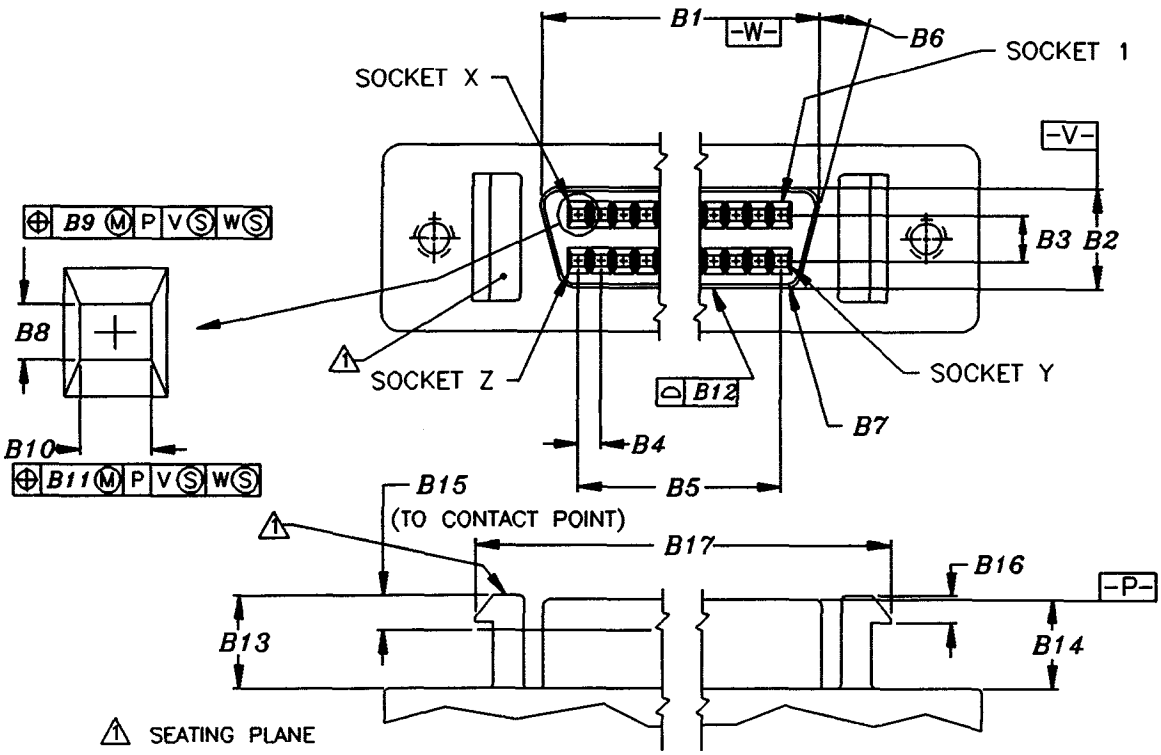

Dimensions	50 Position		68 Position	
	mm	in	mm	in
B1	34,70	1,366	46,13	1,816
B2	5,54	0,218	5,54	0,218
B3	2,54	0,100	2,54	0,100
B4	1,27	0,050	1,27	0,050
B5	30,48	1,200	41,91	1,650
B6	15°	15°	15°	15°
B7	1,00 R	0,039 R	1,00 R	0,039 R
B8	0,61±0,05	0,024±0,002	0,61±0,05	0,024±0,002
B9	0,15	0,006	0,15	0,006
B10	0,86±0,10	0,034±0,004	0,86±0,10	0,034±0,004
B11	0,15	0,006	0,15	0,006
B12	0,05	0,002	0,05	0,002
B13	5,10±0,05	0,201±0,002	5,10±0,05	0,201±0,002
B14	5,00±0,13	0,197±0,005	5,00±0,13	0,197±0,005
B15	1,85 max.	0,073 max.	1,85 max.	0,073 max.
B16	1,50±0,03	0,059±0,001	1,50±0,03	0,059±0,001
B17	42,29±0,10	1,665±0,004	53,72±0,10	2,115±0,004
Socket X	25		34	
Socket Y	26		35	
Socket Z	50		68	

NOTE – Dimensions *B8* and *B10* are the opening in the dielectric. The socket contacts (not shown) fit within the opening.

Figure 5 - 50/68-contact shielded high-density SCSI device connector (A cable/B cable)

Documents
Document Sharing Hub
Full document details: ISO IEC 09316-1995

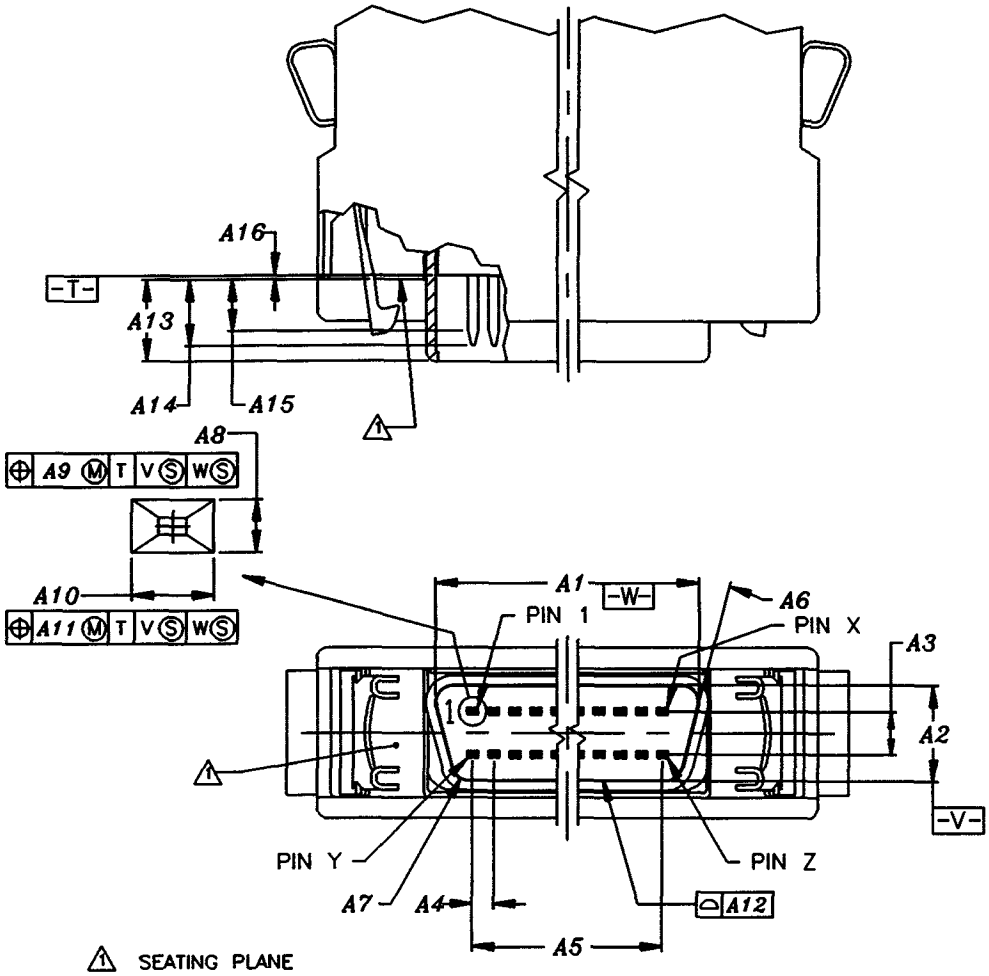

Dimensions	50 Position		68 Position	
	mm	in	mm	in
A1	34,85	1,372	46,28	1,822
A2	5,69	0,224	5,69	0,224
A3	2,54	0,100	2,54	0,100
A4	1,27	0,050	1,27	0,050
A5	30,48	1,200	41,91	1,650
A6	15°	15°	15°	15°
A7	1,04 R	0,041 R	1,04 R	0,041 R
A8	0,40±0,010	0,0156±0,0004	0,40±0,010	0,0156±0,0004
A9	0,23	0,009	0,23	0,009
A10	0,60±0,03	0,024±0,001	0,60±0,03	0,024±0,001
A11	0,23	0,009	0,23	0,009
A12	0,05	0,002	0,05	0,002
A13	4,90±0,10	0,193±0,004	4,90±0,10	0,193±0,004
A14	4,27 max.	0,168 max.	4,27 max.	0,168 max.
A15	2,64 min.	0,104 min.	2,64 min.	0,104 min.
A16	0,25±0,13	0,010±0,005	0,25±0,13	0,010±0,005
Pin X	25		34	
Pin Y	26		35	
Pin Z	50		68	

Figure 6 - 50/68-contact shielded high-density cable connector (A cable/B cable)

Documents Document Sharing Hub
Full document details: ISO IEC 09316-1995

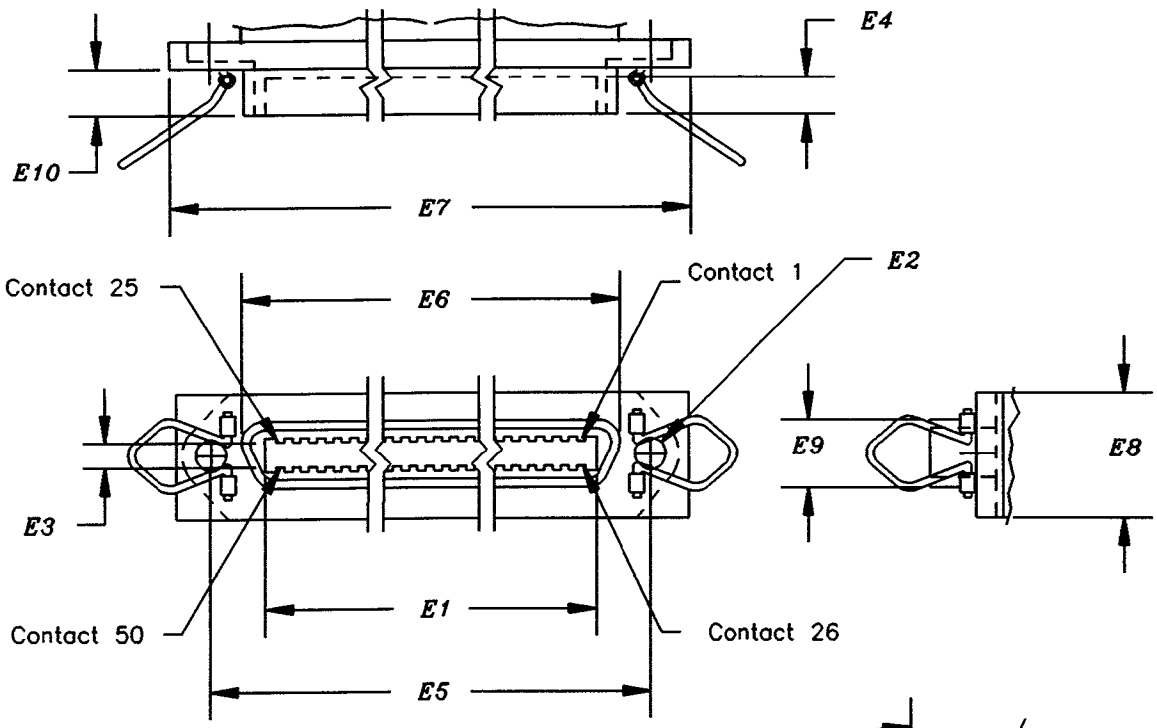

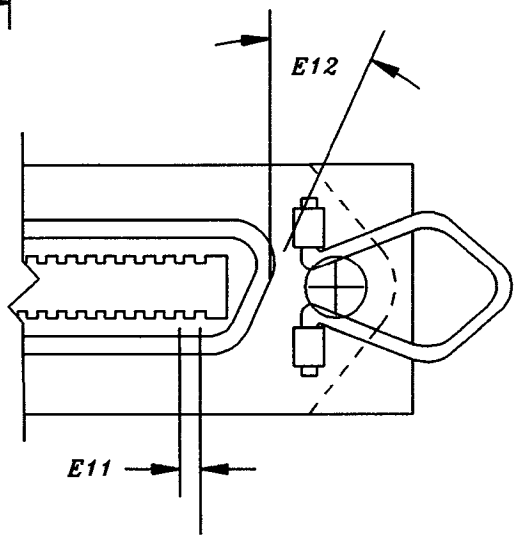

Dimensions	mm	in
E1	56,39 min.	2,220 min.
E2 1)	2,62 min.	0,103 min.
E3	3,99 min.	0,157 min.
E4	5,84 min.	0,230 min.
E5	74,85	2,947
E6	64,29 max.	2,531 max.
E7 2)	83,06	3,270
E8 2)	15,24	0,600
E9	12,04 max.	0,474 max.
E10	9,78 max.	0,385 max.
E11	2,16	0,085
E12	15° ± 2°	15° ± 2°

NOTE – Tolerances ± 0,127 mm (0,005 in) non–cumulative, unless specified otherwise.

1) This dimension is selected to accomodate 4–40 or 6–32 threaded screws.
2) These dimensions are shown for reference only.

Figure 7 - 50-contact shielded low-density SCSI device connector

Documents
Document Sharing Hub
Full document details: ISO IEC 09316-1995

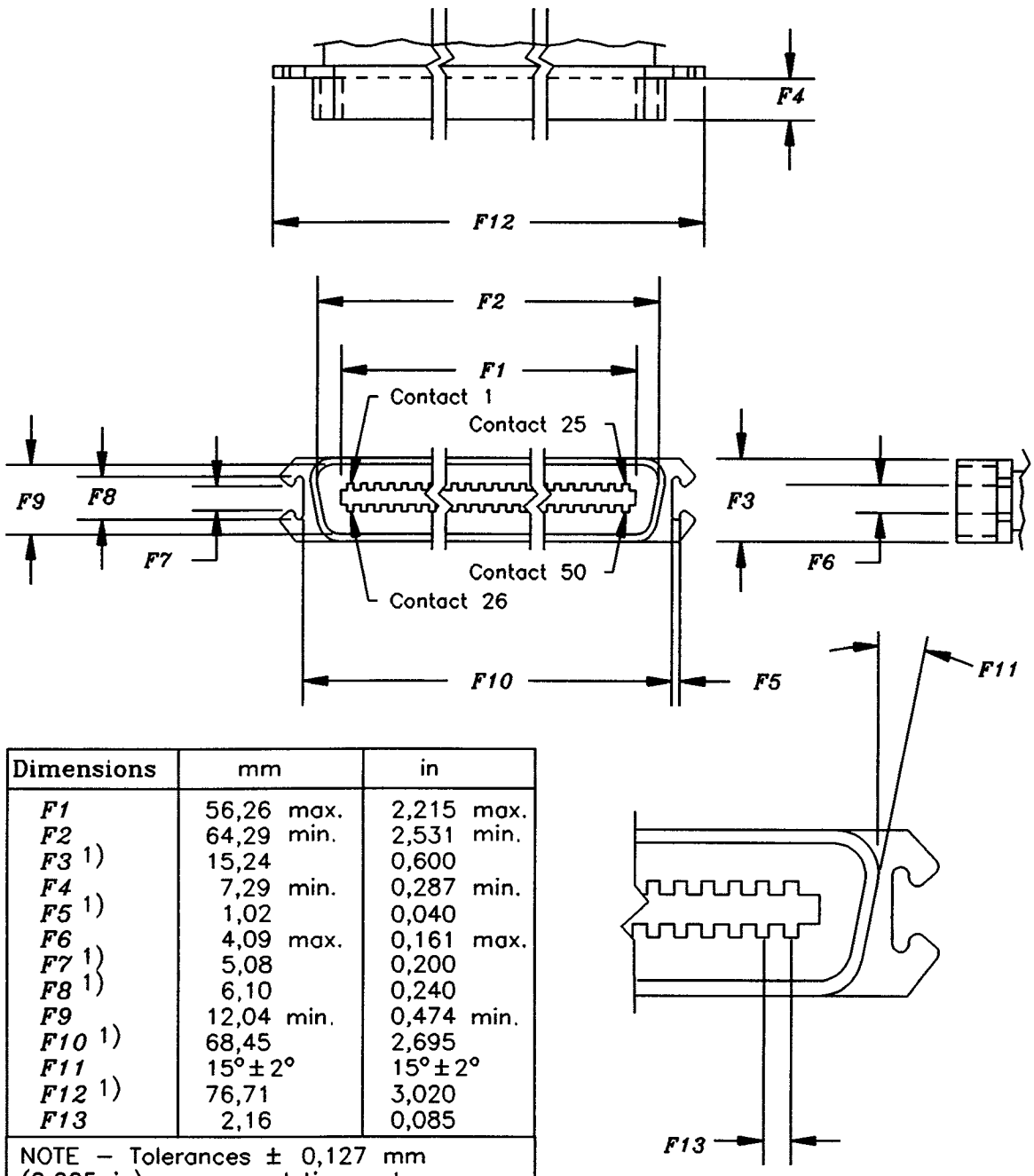

Dimensions	mm	in
F1	56,26 max.	2,215 max.
F2	64,29 min.	2,531 min.
F3 1)	15,24	0,600
F4	7,29 min.	0,287 min.
F5 1)	1,02	0,040
F6	4,09 max.	0,161 max.
F7 1)	5,08	0,200
F8 1)	6,10	0,240
F9	12,04 min.	0,474 min.
F10 1)	68,45	2,695
F11	15° ± 2°	15° ± 2°
F12 1)	76,71	3,020
F13	2,16	0,085

NOTE – Tolerances ± 0,127 mm (0,005 in) non-cumulative, unless specified otherwise.

1) These dimensions are shown for reference only.

Figure 8 - 50-contact shielded low-density cable connector

Documents Document Sharing Hub
Full document details: ISO IEC 09316-1995

5.3.3 Connector contact assignments

The connector contact assignments are defined in tables 1 through 5. Table 1 defines which of the other four tables to use and which set of contact assignments to use.

Table 1 - Cross-reference to connector contact assignments

Connector type	Driver/ receiver type	Cable	Connector figure	Contact assignment table	Contact set
Non-shielded alternative 1	Single-ended	A	1 & 2	2	2
Non-shielded alternative 1	Single-ended	B	1 & 2	3	
Non-shielded alternative 1	Differential	A	1 & 2	4	2
Non-shielded alternative 1	Differential	B	1 & 2	5	
Non-shielded alternative 2	Single-ended	A	3 & 4	2	1
Non-shielded alternative 2	Differential	A	3 & 4	4	1
Shielded alternative 1	Single-ended	A	5 & 6	2	2
Shielded alternative 1	Single-ended	B	5 & 6	3	
Shielded alternative 1	Differential	A	5 & 6	4	2
Shielded alternative 1	Differential	B	5 & 6	5	
Shielded alternative 2	Single-ended	A	7 & 8	2	2
Shielded alternative 2	Differential	A	7 & 8	4	2

AVA Documents
Document Sharing Hub
Full document details: ISO IEC 09316-1995

Table 2 - Single-ended contact assignments - A cable

Signal name	Connector contact number		Cable conductor number		Connector contact number		Signal name
	Set 2	Set 1			Set 1	Set 2	
GROUND	1	1	1	2	2	26	-DB(0)
GROUND	2	3	3	4	4	27	-DB(1)
GROUND	3	5	5	6	6	28	-DB(2)
GROUND	4	7	7	8	8	29	-DB(3)
GROUND	5	9	9	10	10	30	-DB(4)
GROUND	6	11	11	12	12	31	-DB(5)
GROUND	7	13	13	14	14	32	-DB(6)
GROUND	8	15	15	16	16	33	-DB(7)
GROUND	9	17	17	18	18	34	-DB(P)
GROUND	10	19	19	20	20	35	GROUND
GROUND	11	21	21	22	22	36	GROUND
RESERVED	12	23	23	24	24	37	RESERVED
OPEN	13	25	25	26	26	38	TERMPWR
RESERVED	14	27	27	28	28	39	RESERVED
GROUND	15	29	29	30	30	40	GROUND
GROUND	16	31	31	32	32	41	-ATN
GROUND	17	33	33	34	34	42	GROUND
GROUND	18	35	35	36	36	43	-BSY
GROUND	19	37	37	38	38	44	-ACK
GROUND	20	39	39	40	40	45	-RST
GROUND	21	41	41	42	42	46	-MSG
GROUND	22	43	43	44	44	47	-SEL
GROUND	23	45	45	46	46	48	-C/D
GROUND	24	47	47	48	48	49	-REQ
GROUND	25	49	49	50	50	50	-I/O

NOTES
1 The minus sign next to a signal indicates active low.
2 The conductor number refers to the conductor position when using 1,270 mm (0,050) inch centerline flat ribbon cable with a low-density connector or when using 0,635 mm (0,025) inch centerline flat ribbon cable with a high-density connector. Other cable types may be used to implement equivalent contact assignments.
3 Two sets of contact assignments are shown. Refer to table 1 to determine which set of contacts applies to each connector.
4 See 5.4.4 for a definition of the RESERVED lines.

Documents Document Sharing Hub
Full document details: ISO IEC 09316-1995

Table 3 - Single-ended contact assignments - B cable

Signal name	Connector contact number	Cable conductor number		Connector contact number	Signal name
GROUND	1	1	2	35	GROUND
GROUND	2	3	4	36	-DB(8)
GROUND	3	5	6	37	-DB(9)
GROUND	4	7	8	38	-DB(10)
GROUND	5	9	10	39	-DB(11)
GROUND	6	11	12	40	-DB(12)
GROUND	7	13	14	41	-DB(13)
GROUND	8	15	16	42	-DB(14)
GROUND	9	17	18	43	-DB(15)
GROUND	10	19	20	44	-DB(P1)
GROUND	11	21	22	45	-ACKB
GROUND	12	23	24	46	GROUND
GROUND	13	25	26	47	-REQB
GROUND	14	27	28	48	-DB(16)
GROUND	15	29	30	49	-DB(17)
GROUND	16	31	32	50	-DB(18)
TERMPWRB	17	33	34	51	TERMPWRB
TERMPWRB	18	35	36	52	TERMPWRB
GROUND	19	37	38	53	-DB(19)
GROUND	20	39	40	54	-DB(20)
GROUND	21	41	42	55	-DB(21)
GROUND	22	43	44	56	-DB(22)
GROUND	23	45	46	57	-DB(23)
GROUND	24	47	48	58	-DB(P2)
GROUND	25	49	50	59	-DB(24)
GROUND	26	51	52	60	-DB(25)
GROUND	27	53	54	61	-DB(26)
GROUND	28	55	56	62	-DB(27)
GROUND	29	57	58	63	-DB(28)
GROUND	30	59	60	64	-DB(29)
GROUND	31	61	62	65	-DB(30)
GROUND	32	63	64	66	-DB(31)
GROUND	33	65	66	67	-DB(P3)
GROUND	34	67	68	68	GROUND

NOTES
1 The minus sign next to a signal indicates active low.
2 The conductor number refers to the conductor position when using 0,635 mm (0,025 inch) centreline flat ribbon cable. Other cable types may be used to implement contact assignments.

NOTE 10 An alternate 16-bit single-cable solution and an alternate 32-bit solution is being defined and the B cable definition will be removed in a future version of SCSI.

Documents
Document Sharing Hub
Full document details: ISO IEC 09316-1995

Table 4 - Differential contact assignments - A cable

Signal name	Connector contact number		Cable conductor number		Connector contact number		Signal name
	Set 2	Set 1			Set 1	Set 2	
GROUND	1	1	1	2	2	26	GROUND
+DB(0)	2	3	3	4	4	27	-DB(0)
+DB(1)	3	5	5	6	6	28	-DB(1)
+DB(2)	4	7	7	8	8	29	-DB(2)
+DB(3)	5	9	9	10	10	30	-DB(3)
+DB(4)	6	11	11	12	12	31	-DB(4)
+DB(5)	7	13	13	14	14	32	-DB(5)
+DB(6)	8	15	15	16	16	33	-DB(6)
+DB(7)	9	17	17	18	18	34	-DB(7)
+DB(P)	10	19	19	20	20	35	-DB(P)
DIFFSENS	11	21	21	22	22	36	GROUND
RESERVED	12	23	23	24	24	37	RESERVED
TERMPWR	13	25	25	26	26	38	TERMPWR
RESERVED	14	27	27	28	28	39	RESERVED
+ATN	15	29	29	30	30	40	-ATN
GROUND	16	31	31	32	32	41	GROUND
+BSY	17	33	33	34	34	42	-BSY
+ACK	18	35	35	36	36	43	-ACK
+RST	19	37	37	38	38	44	-RST
+ACK	18	35	35	36	36	43	-ACK
+RST	19	37	37	38	38	44	-RST
+MSG	20	39	39	40	40	45	-MSG
+SEL	21	41	41	42	42	46	-SEL
+C/D	22	43	43	44	44	47	-C/D
+REQ	23	45	45	46	46	48	-REQ
+I/O	24	47	47	48	48	49	-I/O
GROUND	25	49	49	50	50	50	GROUND

NOTES
1 The conductor number refers to the conductor position when using 1,270 mm (0,050) inch centerline flat ribbon cable with a low-density connector or when using 0,635 mm (0,025) inch centerline flat ribbon cable with a high-density connector. Other cable types may be used to implement equivalent contact assignments.
2 Two sets of contact assignments are shown. Refer to table 1 to determine which set of contacts applies to each connector.
3 See 5.4.4 for a definition of the RESERVED lines.

AVA Documents Document Sharing Hub
Full document details: ISO IEC 09316-1995

Table 5 - Differential contact assignments - B cable

Signal name	Connector contact number	Cable conductor number		Connector contact number	Signal name
GROUND	1	1	2	35	GROUND
+DB(8)	2	3	4	36	-DB(8)
+DB(9)	3	5	6	37	-DB(9)
+DB(10)	4	7	8	38	-DB(10)
+DB(11)	5	9	10	39	-DB(11)
+DB(12)	6	11	12	40	-DB(12)
+DB(13)	7	13	14	41	-DB(13)
+DB(14)	8	15	16	42	-DB(14)
+DB(15)	9	17	18	43	-DB(15)
+DB(P1)	10	19	20	44	-DB(P1)
+ACKB	11	21	22	45	-ACKB
GROUND	12	23	24	46	DIFFSENS
+REQB	13	25	26	47	-REQB
+DB(16)	14	27	28	48	-DB(16)
+DB(17)	15	29	30	49	-DB(17)
+DB(18)	16	31	32	50	-DB(18)
TERMPWRB	17	33	34	51	TERMPWRB
TERMPWRB	18	35	36	52	TERMPWRB
+DB(19)	19	37	38	53	-DB(19)
+DB(20)	20	39	40	54	-DB(20)
+DB(21)	21	41	42	55	-DB(21)
+DB(22)	22	43	44	56	-DB(22)
+DB(23)	23	45	46	57	-DB(23)
+DB(P2)	24	47	48	58	-DB(P2)
+DB(24)	25	49	50	59	-DB(24)
+DB(25)	26	51	52	60	-DB(25)
+DB(26)	27	53	54	61	-DB(26)
+DB(27)	28	55	56	62	-DB(27)
+DB(28)	29	57	58	63	-DB(28)
+DB(29)	30	59	60	64	-DB(29)
+DB(30)	31	61	62	65	-DB(30)
+DB(31)	32	63	64	66	-DB(31)
+DB(P3)	33	65	66	67	-DB(P3)
GROUND	34	67	68	68	GROUND

NOTE
The conductor number refers to the conductor position when using 0,635 mm (0,025 inch) centreline flat ribbon cable. Other cable types may be used to implement contact assignments.

NOTE 11 An alternate 16-bit single-cable solution and an alternate 32-bit solution is being defined and the B cable definition will be removed in a future version of SCSI.

AVA Documents
Document Sharing Hub
Full document details: ISO IEC 09316-1995

5.4 Electrical description

For the measurements in this subclause, SCSI bus termination is assumed to be external to the SCSI device. See 5.4.4 for the terminating requirements for the RESERVED lines. SCSI devices may have the provision for allowing optional internal termination.

5.4.1 Single-ended alternative

All signals not defined as RESERVED, GROUND, TERMPWR or OPEN shall be terminated at both ends of the bus. The implementor may choose one of the following two methods to terminate each end (see figures 9 and 10):

a) The termination of each signal shall consist of 220 Ω (±5%) to the TERMPWR line and 330 Ω (±5%) to ground. Using resistors with ±1% tolerance improves noise margins.
b) The termination of each signal shall meet these requirements:
   1) The terminators shall each supply a characteristic impedance between 100 Ω and 132 Ω.
   2) The terminators shall be powered by the TERMPWR line and may receive additional power from other sources but shall not require such additional power for proper operation (see 5.4.3).
   3) The current available to any signal line driver shall not exceed 48 mA when the driver asserts the line and pulls it to 0,5 V d.c. Only 44,8 mA of this current shall be available from the two terminators.
   4) The voltage on all released signal lines shall be at least 2,5 V d.c. when the TERMPWR line is within specified values (see 5.4.3).
   5) These conditions shall be met with any legal configuration of targets and initiators as long as at least one device is supplying TERMPWR.

The first termination method above is the same as in SCSI-1. The second termination method is recommended for better signal quality.

5.4.1.1 Output characteristics

All signals shall use open-collector three-state drivers. Each signal driven by an SCSI device shall have the following output characteristics when measured at the SCSI device's connector:

V_{OL} (low-level output voltage) = 0,0 to 0,5 V d.c. at 48 mA sinking (signal assertion)

V_{OH} (high-level output voltage) = 2,5 to 5,25 V d.c. (signal negation)

5.4.1.2 Input characteristics

SCSI devices with power on shall meet the following electrical characteristics on each signal (including both receivers and passive drivers):

V_{IL} (low-level input voltage)	= 0,0 V d.c. to 0,8 V d.c. (signal true)
V_{IH} (high-level input voltage)	= 2,0 V d.c. to 5,25 V d.c. (signal false)
I_{IL} (low-level input current)	= -0,4 mA to 0,0 mA at V_I = 0,5 V d.c.
I_{IH} (high-level input current)	= 0,0 mA to 0,1 mA at V_I = 2,7 V d.c.
Minimum input hysteresis	= 0,2 V d.c.
Maximum input capacitance	= 25 pF (measured at the device connector closest to the stub, if any, within the device)

It is recommended that SCSI devices with power off also meet the above I_{IL} and I_{IH} electrical characteristics on each signal.

To achieve maximum noise immunity and to assure proper operation with complex cable configurations, it is recommended that the nominal switching threshold be approximately 1,4 V.

Documents Document Sharing Hub
Full document details: ISO IEC 09316-1995

5.4.2 Differential alternative

All signals consist of two lines denoted +SIGNAL and -SIGNAL. A signal is true when +SIGNAL is more positive than -SIGNAL, and a signal is false when -SIGNAL is more positive than +SIGNAL. All assigned signals of the A and B cables described in 5.6 shall be terminated at each end of the cable with a terminator network as shown in figure 11. Resistor tolerances in the terminator network shall be ±5 % or less.

The DIFFSENS signal of the connector is used as an active high enable for the differential drivers. If a single-ended device or terminator is inadvertently connected, this signal is grounded, disabling the differential drivers (see figure 12).

The characteristic impedance of differential terminators is 122 Ω.

5.4.2.1 Output characteristics

Each signal driven by an SCSI device shall have the following output characteristics when measured at the SCSI device's connector:

V_{OL} (low-level output voltage) = 1,7 V maximum at I_{OL} (low-level output current) = 55 mA.
V_{OH} (high-level output voltage) = 2,7 V minimum at I_{OH} (high-level output current) = -55 mA.
V_{OD} (differential output voltage) = 1,0 V minimum with common-mode voltage ranges from -7 V d.c. to +12 V d.c.

V_{OL} and V_{OH} shall be as measured between the output terminal and the SCSI device's logic ground reference.

The output characteristics shall additionally conform to ISO/IEC 8482:1993.

5.4.2.2 Input characteristics

SCSI devices shall meet the following electrical characteristics on each signal (including both receivers and passive drivers):

I_I (input current on either input) = ± 2,0 mA maximum.
Maximum input capacitance = 25 pF.

The I_I requirement shall be met with the input voltage varying between -7 V d.c. and +12 V d.c., with power on or off, and with the hysteresis equaling 35 mV, minimum.

The input characteristics shall additionally conform to ISO/IEC 8482:1993.

5.4.3 Terminator power

SCSI initiators shall supply terminator power to the TERMPWR contact(s) and, if it implements the wide SCSI option, to the TERMPWRB contacts. This power shall be supplied through a diode or similar semiconductor that prevents backflow of power to the SCSI device. Targets and SCSI devices that become temporary initiators (e.g. targets which implement the COPY command or asynchronous event notification) are not required to supply terminator power. Any SCSI device may supply terminator power. Interface error rates are lower if the termination voltage is maintained at the extreme ends of the cable.

All terminators independent of location shall be powered from the TERMPWR and TERMPWRB contact(s). The use of keyed connectors is recommended in SCSI devices that provide terminator power to prevent accidental grounding or the incorrect connection of terminator power.

NOTE 12 Regulatory agencies may require limiting maximum (short circuit) current to the terminator power lines. Recommended current limiting is 1,5 A for TERMPWR and 2 A for TERMPWRB. For systems utilizing multiple initiators, the initiators may be configured with option straps or current limiting devices. Maximum available current should not exceed 5 A.

AVA Documents
Document Sharing Hub
Full document details: ISO IEC 09316-1995