INTERNATIONAL STANDARD

ISO/IEC 14165-241

First edition
2005-05

Information technology – Fibre channel –

Part 241: Backbone 2 (FC-BB-2)

Reference number
ISO/IEC 14165-241:2005(E)

Documents
Document Sharing Hub

Copyright International Organization for Standardization
Reproduced by IHS under license with ISO
No reproduction or networking permitted without license from IHS
Not for Resale
Full document details: ISO IEC 14161-241-2005

Documents
Document Sharing Hub
Copyright International Organization for Standardization
Reproduced by IHS under license with ISO
No reproduction or networking permitted without license from IHS
Not for Resale
Full document details: ISO IEC 14161-241-2005

INTERNATIONAL STANDARD

ISO/IEC 14165-241

First edition
2005-05

Information technology – Fibre channel –

Part 241: Backbone 2 (FC-BB-2)

© ISO/IEC 2005

All rights reserved. Unless otherwise specified, no part of this publication may be reproduced or utilized in any form or by any means, electronic or mechanical, including photocopying and microfilm, without permission in writing from the publisher.

ISO/IEC Copyright Office • Case postale 56 • CH-1211 Genève 20 • Switzerland

PRICE CODE XA

For price, see current catalogue

Documents
Document Sharing Hub

Copyright International Organization for Standardization
Reproduced by IHS under license with ISO
No reproduction or networking permitted without license from IHS
Not for Resale
Full document details: ISO IEC 14161-241-2005

--`,,`,`,-`-`,,`,,`,`,,`---

Documents
Document Sharing Hub

Copyright International Organization for Standardization
Reproduced by IHS under license with ISO
No reproduction or networking permitted without license from IHS
Not for Resale
Full document details: ISO IEC 14161-241-2005

Contents

FOREWORD 10

INTRODUCTION 11

1 Scope 13

2 Normative references 13
2.1 Approved references 13
2.2 Other references 13

3 Definitions and Conventions 14
3.1 Common Defintions 14
3.2 FC-BB-2_ATM Definitions 15
3.3 FC-BB-2_SONET Definitions 17
3.4 FCIP and TCP/IP Definitions 18
3.5 Symbols and abbreviations 20
3.5.1 General 20
3.5.2 FC-BB-2_ATM 20
3.5.3 FC-BB-2_SONET 21
3.5.4 FC-BB-2_IP 21
3.6 Keywords 21
3.6.1 expected 21
3.6.2 invalid 21
3.6.3 mandatory 22
3.6.4 may 22
3.6.5 may not 22
3.6.6 obsolete 22
3.6.7 optional 22
3.6.8 reserved 22
3.6.9 shall 22
3.6.10 should 22
3.7 Conventions 22
3.8 Notations for Procedure and Functions 23

4 FC-BB-2 Structure and Concepts 24
4.1 FC-BB-2 Backbone Mappings 24
4.2 FC-BB-2 Reference Models 24
4.3 FC-BB-2 Specifications Overview 25
4.3.1 FC-BB-2_ATM 25
4.3.2 FC-BB-2_SONET 26
4.3.3 FC-BB-2_IP 26
4.4 FC-BB-2 Requirements 26
4.4.1 Fibre Channel Class support 26
4.4.2 Payload transparency 27
4.4.3 Latency delay and timeout value 27
4.4.4 QoS and bandwidth 27
4.4.5 In-order delivery 27
4.4.6 Flow control 27
4.5 FC-BB-2 Link Service Codes 28

5 FC-BB-2_ATM and FC-BB-2_SONET messages and formats 29
5.1 Applicability 29

Documents
Document Sharing Hub

Copyright International Organization for Standardization
Reproduced by IHS under license with ISO
No reproduction or networking permitted without license from IHS
Not for Resale
Full document details: ISO IEC 14161-241-2005

5.2 Message Formats 29
5.2.1 LLC/SNAP Header format 29
5.2.2 BBW_Header format 30
5.2.3 BBW message payload format for SFC 31
5.2.4 BBW message payload format for SR 31
5.2.4.1 SR_Header Formats 31
5.2.4.2 SR_BBW messages 33
5.2.4.3 Format Field Parameters 34
5.2.4.4 SR Commands and Responses 34
5.2.4.5 Exception condition reporting and recovery 37

6 The SR and SFC Protocol Procedures 41
6.1 Applicability 41
6.2 SR Protocol Overview 41
6.3 Description of the SR procedure 42
6.3.1 SR mode of operation 42
6.3.2 SR procedure for addressing 42
6.3.3 SR procedure for the use of the P/F bit 42
6.3.4 SR procedure for data link set-up and disconnection 42
6.3.4.1 Data link set-up 42
6.3.4.2 Information transfer phase 43
6.3.4.3 Data link disconnection 43
6.3.4.4 Disconnected Phase 44
6.3.4.5 Collision of unnumbered commands 44
6.3.4.6 Collision of SR_DM response with SR_SM or SR_DISC command . 45
6.3.4.7 Collision of SR_DM responses 45
6.3.5 Procedures for information transfer using multi-selective reject 45
6.3.5.1 Procedures for SR_I messages 45
6.3.5.2 Sending new SR_I messages 45
6.3.5.3 Receiving an in-sequence SR_I message 45
6.3.5.4 Reception of invalid messages 46
6.3.5.5 Reception of out-of-sequence SR_I messages 46
6.3.5.6 Receiving acknowledgement 47
6.3.5.7 Receiving a SR_SREJ response message 47
6.3.5.8 Receiving a SR_RNR message 48
6.3.5.9 BBW busy condition 48
6.3.5.10 Awaiting acknowledgement 49
6.3.5.11 Receiving a SR_RR response messages with the F bit set to 1 49
6.3.5.12 Responding to command messages with the P bit set to 1 50
6.3.6 SR conditions for data link resetting or data link re-initialization (data link set-up) 50
6.3.6.1 Condition 1 50
6.3.6.2 Condition 2 50
6.3.6.3 Condition 3 50
6.3.6.4 Condition 4 50
6.3.7 SR procedure for data link resetting 50
6.3.7.1 Procedure 1 50
6.3.7.2 Procedure 2 51
6.3.7.3 Procedure 3 51
6.3.8 List of SR system parameters 52
6.3.8.1 Timer T1 52
6.3.8.2 Parameter T2 52
6.3.8.3 Maximum number of attempts to complete a transmission N2 52
6.3.8.4 Maximum number of outstanding SR_I messages k 52

Documents
Document Sharing Hub
Copyright International Organization for Standardization
Reproduced by IHS under license with ISO
No reproduction or networking permitted without license from IHS
Not for Resale
Full document details: ISO IEC 14161-241-2005

6.4 Simple Flow Control (SFC) 53

7 FC-BB-2_ATM Structure and Concepts 54
7.1 Applicability 54
7.2 FC-BB-2_ATM Overview 54
7.3 FC-BB-2_ATM Functional Model 55
7.3.1 B_Port Network Interface 55
7.3.2 ATM Network Interface 55
7.3.3 Mapping and Encapsulation. 55
7.3.4 FC-BB-2_ATM Forwarding 56
7.3.5 Call Handling and ATM Service 56
7.3.6 Frame Handling 57

8 Mapping and Message Encapsulation using AAL5 58
8.1 Applicability 58
8.2 Overview. 58
8.3 Mapping BBW messages to AAL5. 58

9 FC-BB-2_ATM Service Considerations. 61
9.1 Applicability 61
9.2 ATM Service Type 61
9.3 Latency Delay and Timeout Value 61
9.4 Bandwidth Sharing and Allocation. 61
9.5 Quality of Service (QoS) 62
9.6 Delivery Order 62
9.7 Loss and Flow Control 63

10 FC-BB-2_SONET Structure and Concepts 64
10.1 Applicability and Related Clauses 64
10.2 FC-BB-2_SONET Overview 64
10.3 FC-BB-2_SONET Functional Model 65
10.3.1 Fibre Channel Network Interface. 65
10.3.2 SONET Network Interface 66
10.3.3 Mapping and Encapsulation. 67
10.3.4 FC-BB-2_SONET Forwarding 67
10.3.5 Call Handling. 67
10.3.6 Frame Handling 67

11 Mapping and Message Encapsulation using HDLC-like Framing 68
11.1 Applicability 68
11.2 Overview. 68
11.3 Mapping of BBW messages to HDLC format 68
11.4 Mapping HDLC frames to SONET/SDH 70

12 FC-BB-2_SONET Service Considerations 74
12.1 Applicability 74
12.2 Latency Delay and Timeout Value 74
12.3 Delivery Order 74
12.4 Loss and Flow Control 74

13 FC-BB-2_IP Structure and Concepts. 75
13.1 Applicability and Related Clauses 75
13.2 FC-BB-2_IP Overview 75
13.3 VE_Port Functional Model 76

Documents
Document Sharing Hub

Copyright International Organization for Standardization
Reproduced by IHS under license with ISO
No reproduction or networking permitted without license from IHS
Not for Resale
Full document details: ISO IEC 14161-241-2005

13.3.1 FC-BB-2_IP Interface Protocol Layers . . . 76
13.3.2 E_Port/F_Port FC Interface . . . 76
13.3.3 FC-BB-2_IP Protocol Interface . . . 76
13.3.3.1 Major Components . . . 76
13.3.3.2 FC Switching Element (SE) with FC Routing . . . 77
13.3.3.3 FC and FCIP Entities . . . 78
13.3.3.4 VE_Port Virtual ISL Exchanges . . . 80
13.3.3.5 Control and Service Module (CSM) . . . 81
13.3.3.6 Platform Management Module (PMM) . . . 82
13.3.4 IP Network Interface . . . 84
13.4 The B_Access Functional Model . . . 84
13.4.1 FC-BB-2_IP Interface Protocol Layers . . . 84
13.4.2 B_Port FC Interface . . . 84
13.4.3 FC-BB-2_IP Protocol Interface . . . 85
13.4.3.1 Major Components . . . 85
13.4.3.2 FC and FCIP Entities . . . 85
13.4.3.3 B_Access Virtual ISL Exchanges . . . 87
13.4.3.4 B_Port Control and Service Module (CSM) . . . 90
13.4.3.5 B_Port Platform Management Module (PMM) . . . 90
13.4.4 IP Network Interface . . . 90
13.5 FC-BB-2_IP Network Topologies . . . 91

14 Mapping and Message Encapsulation using TCP/IP . . . 93
14.1 Applicability . . . 93
14.2 Encapsulated Frame Structures . . . 93
14.2.1 FC frame Encapsulation Structure . . . 93
14.2.2 Encapsulated FCIP Special Frame (FSF) structure . . . 94
14.3 TCP/IP Encapsulation . . . 95

15 The FC-BB-2_IP Protocol Procedures . . . 96
15.1 Applicability . . . 96
15.2 FC-BB-2_IP Protocol Procedures . . . 96
15.3 Procedures for Platform Management . . . 96
15.3.1 Function . . . 96
15.3.2 Procedures for Discovery . . . 96
15.3.3 Procedures for Extending FC-SP Security . . . 96
15.3.3.1 Authentication Mechanisms . . . 96
15.3.3.2 Authenticate Special Frame (ASF) . . . 97
15.4 Procedures for Connection Management . . . 98
15.4.1 Function . . . 98
15.4.2 Procedures for Link Setup . . . 98
15.4.3 Procedures for Data Transfer . . . 99
15.4.4 Procedures for FCIP Link Disconnection . . . 99
15.4.5 Procedures for Multiple Connection Management . . . 99
15.5 Procedures for Error Detection Recovery . . . 100
15.5.1 Procedures for Handling Invalid FC frames . . . 100
15.5.2 Procedures for Error Recovery . . . 100
15.6 List of FC-BB-2_IP System Parameters . . . 101
15.6.1 FC Timers . . . 101
15.6.2 TCP Timers . . . 101
15.6.3 Maximum number of attempts to complete an Encapsulated FC Frame transmission . . . 101
15.6.4 Maximum number of outstanding Encapsulated FC Frames . . . 101

Documents
Document Sharing Hub
Copyright International Organization for Standardization
Reproduced by IHS under license with ISO
No reproduction or networking permitted without license from IHS
Not for Resale
Full document details: ISO IEC 14161-241-2005

16 FC-BB-2_IP Service Considerations 102
16.1 Applicability 102
16.2 Latency Delay 102
16.3 Throughput 102
16.3.1 How Timeouts affect Throughput 102
16.3.2 How loss affects Throughput 102
16.3.3 Other factors that affect Throughput 102
16.4 Reliability 103
16.4.1 Loss of Connectivity 103
16.4.2 Loss of Synchronization 103
16.4.3 Loss or Corruption of TCP Segments 103
16.4.4 Loss or Corruption of FC frames 103
16.4.5 FCIP Error Reporting 103
16.5 Quality of Service (QoS) 104
16.6 Delivery Order 104
16.7 IP Multicast and Broadcast 104
16.8 Security and Authentication 104

Annex A (normative) **Encoded SOF and EOF Ordered Sets 105**
A.1 Ordered Sets 105
A.2 SOF and EOF OS-Codes 105
A.3 FC-BB-2 SOF OS codes 106
A.4 FC-BB-2 EOF OS codes 106

Annex B (informative) **ATM Traffic Management and Signaling 108**
B.1 ATM Traffic Management 108
B.2 ATM QoS Parameters 108
B.3 ATM Traffic Parameters 111
B.4 ATM Service Categories 112
B.5 ATM Adaptation Layer (AAL) Types 114
B.6 ATM Multiplexing 114
B.7 Summary of ATM Services and Guarantees 115
B.8 ATM Signaling UNI Standard 115

Annex C (informative) **SR Protocol Parameter Guidelines and State Diagram 118**
C.1 Assumptions 118
C.2 Calculated Ack Delay (T2) Timer variable 118
C.3 Calculated Window size 118
C.4 Calculated Ack (T1) Timer variable 118
C.5 SR Protocol State Diagram 119

Bibliography 121

Documents
Document Sharing Hub
Copyright International Organization for Standardization
Reproduced by IHS under license with ISO
No reproduction or networking permitted without license from IHS
Not for Resale
Full document details: ISO IEC 14161-241-2005

Figure

Figure 1 – Scope and components of FC-BB-2 specification 11
Figure 2 – FC-BB-2_ATM Reference Model 24
Figure 3 – FC-BB-2_SONET Reference Model 25
Figure 4 – FC-BB-2_IP Reference Model. 25
Figure 5 – SR Flow Control Protocol Between two BBWs 41
Figure 6 – FC-BB-2_ATM Network Configuration 54
Figure 7 – FC-BB-2_ATM Functional Block Diagram. 56
Figure 8 – AAL5 Mapping of a BBW message with SFC 59
Figure 9 – AAL5 Mapping of a BBW message with SR. 60
Figure 10 – Recommended ATM Bandwidth Allocation for multiple VCs 61
Figure 11 – FC-BB-2_SONET Network Configuration 64
Figure 12 – FC-BB-2_SONET Functional Block Diagram. 66
Figure 13 – SONET SPE HDLC Mapping Example. 71
Figure 14 – Path Signal label: C2 71
Figure 15 – Encapsulation of BBW message into HDLC frame using SFC 72
Figure 16 – Encapsulation of BBW message into HDLC frame using SR 73
Figure 17 – FC-BB-2_IP Network Configuration 75
Figure 18 – FC-BB-2_IP VE_Port Functional Model 77
Figure 19 – FC-BB-2_IP Protocol Layers 78
Figure 20 – Scope of VE_Port Virtual ISL 80
Figure 21 – Security Layers. 83
Figure 22 – FC-BB-2_IP B_Access Functional Model 86
Figure 23 – Scope of B_Access Virtual ISL 87
Figure 24 – B_Access Initialization State Machine. 90
Figure 25 – FC-BB-2_IP Network Topologies 92
Figure 26 – TCP/IP Encapsulation of an Encapsulated FC Frame 95
Figure B.1 – Cell Transfer Delay Distribution 110
Figure B.2 – SVC Signaling at the UNI and Switched payload. 117
Figure C.1 – SR Protocol State Diagram. 119

Documents
Document Sharing Hub
Copyright International Organization for Standardization
Reproduced by IHS under license with ISO
No reproduction or networking permitted without license from IHS
Not for Resale
Full document details: ISO IEC 14161-241-2005

Table

Table 1 – FC-BB-2 Organization. 12
Table 2 – ISO and International Conventions 23
Table 3 – Specification and FC Port Types Supported 24
Table 4 – FC-BB-2 SW_ILS Codes. 28
Table 5 – FC-BB-2 ELS Codes 28
Table 6 – BBW message structure. 29
Table 7 – LLC/SNAP Header 29
Table 8 – SNAP PID 30
Table 9 – BBW_Header. 30
Table 10 – Flow Control Protocol Type Encodings 30
Table 11 – BBW message payload structure for SFC 31
Table 12 – BBW message payload structure for SR 31
Table 13 – SR_Header format 32
Table 14 – SS bits encoding. 32
Table 15 – MMMMM bit encoding. 32
Table 16 – SR_BBW messages 33
Table 17 – SR_I message format. 35
Table 18 – SR_SREJ payload format 36
Table 19 – SR_FRMR payload format 38
Table 20 – Mapping of BBW messages to AAL5 CPCS 58
Table 21 – ATM VBR-NRT Service Specification. 62
Table 22 – SONET/SDH Data Rates. 66
Table 23 – Mapping of BBW messages to HDLC format. 69
Table 24 – FC-BB-2_SONET Protocol Stack 71
Table 25 – LKA payload 81
Table 26 – LKA Accept payload 81
Table 27 – EBP Request payload. 87
Table 28 – EBP Accept payload 88
Table 29 – EBP Reject Reason Code Explanation 88
Table 30 – TCP/IP Segment structure carrying Encapsulated FC Frame 93
Table 31 – Encapsulated FC Frame structure 93
Table 32 – TCP/IP Segment structure carrying Encapsulated FSF 94
Table 33 – Encapsulated FSF structure 94
Table 34 – ASF Request Payload 97
Table 35 – ASF Accept Response Payload 98
Table A.1 – Byte-encoded frame delimiter format 105
Table A.2 – OS-Code Definition 105
Table A.3 – FC-BB-2 SOF Codes 106
Table A.4 – FC-BB-2 EOF Codes 106
Table B.1 – I.356 defined QoS Parameters for different Traffic Classes. 111
Table B.2 – Service Categories and its Traffic and QoS Attributes 113
Table B.3 – ATM Service Categories and Guarantees 115

Documents
Document Sharing Hub
Copyright International Organization for Standardization
Reproduced by IHS under license with ISO
No reproduction or networking permitted without license from IHS
Not for Resale
Full document details: ISO IEC 14161-241-2005

IINFORMATION TECHNOLOGY - FIBRE CHANNEL-

PART 241: Backbone 2 (FC-BB-2)

FOREWORD

1) ISO (International Organization for Standardization) and IEC (International Electrotechnical Commission) form the specialized system for worldwide standardization. National bodies that are members of ISO or IEC participate in the development of International Standards through technical committees established by the respective organization to deal with particular fields of technical activity. ISO and IEC technical committees collaborate in fields of mutual interest. Other international organizations, governmental and non-governmental, in liaison with ISO and IEC, also take part in the work.

2) In the field of information technology, ISO and IEC have established a joint technical committee, ISO/IEC JTC 1. Draft International Standards adopted by the joint technical committee are circulated to national bodies for voting. Publication as an International Standard requires approval by at least 75 % of the national bodies casting a vote.

3) All users should ensure that they have the latest edition of this publication.

4) No liability shall attach to IEC or ISO or its directors, employees, servants or agents including individual experts and members of their technical committees and IEC or ISO National Committees for any personal injury, property damage or other damage of any nature whatsoever, whether direct or indirect, or for costs (including legal fees) and expenses arising out of the publication of, use of, or reliance upon this ISO/IEC publication or any other IEC or IEC/ISO publications.

5) Attention is drawn to the normative references cited in this publication. Use of the referenced publications is indispensable for the correct application of this publication.

6) Attention is drawn to the possibility that some of the elements of this ISO/IEC Publication may be the subject of patent rights. ISO/IEC shall not be held responsible for identifying any or all such patent rights.

International Standard ISO/IEC 14165-241 was prepared by subcommittee 25: Interconnection of information technology equipment, of ISO/IEC joint technical committee 1: Information technology.

References in square brackets [n] are either in 2.1, 2.2 or the bibliography.

Documents
Document Sharing Hub

Copyright International Organization for Standardization
Reproduced by IHS under license with ISO
No reproduction or networking permitted without license from IHS
Not for Resale
Full document details: ISO IEC 14161-241-2005

INTRODUCTION

International Standard ISO/IEC 14165-241 consists of three distinct Fibre Channel mappings as specified in Clause 1.

Figure 1 illustrates the major components of the FC-BB-2 specification and its relationship to IETF draft-ietf-ips-fcovertcpip-12 (FCIP) and the ATM Forum / ITU-T standards. Table 1 shows the organization of this document. FC-BB-2_IP, FC-BB-2_ATM and FC-BB-2_SONET do not interoperate in any way and are independent specifications.

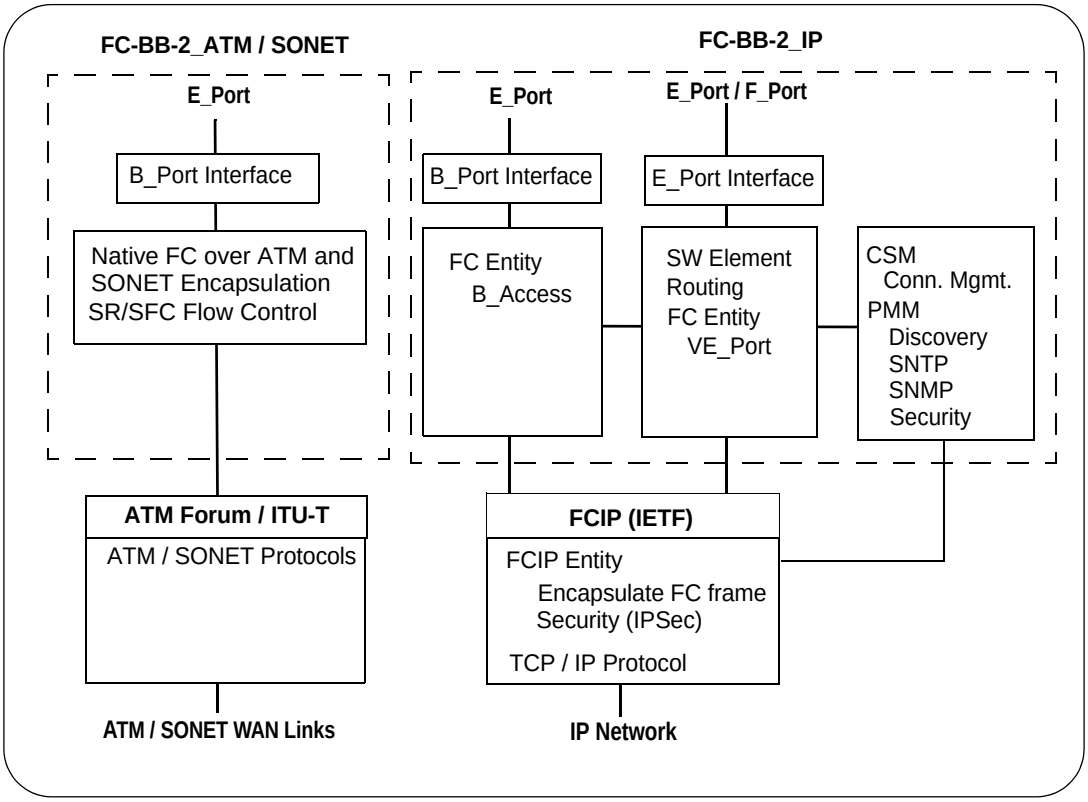

Figure 1 – Scope and components of FC-BB-2 specification

FC-BB-2 is divided into 16 clauses and 3 annexes as follows:

Clause 1 - Scope

Clause 2 - Normative references

Clause 3 - Definitions, abbreviations and conventions

Clause 4 - FC-BB-2 reference models and requirements

Clause 5 - Messages and formats for the ATM and SONET mappings

Clause 6 - Flow control protocols used in conjunction with ATM and SONET mappings

Documents
Document Sharing Hub
Copyright International Organization for Standardization
Reproduced by IHS under license with ISO
No reproduction or networking permitted without license from IHS
Not for Resale
Full document details: ISO IEC 14161-241-2005

Clause 7 - FC-BB-2_ATM model structure

Clause 8 - Mapping and message encapsulation used with ATM mapping

Clause 9 - FC-BB-2_ATM service considerations

Clause 10 - FC-BB-2_SONET model structure

Clause 11 - Mapping and message encapsulation used with SONET mapping

Clause 12 - FC-BB-2_SONET service considerations

Clause 13 - FC-BB-2_IP model structure

Clause 14 - Mapping and message encapsulation used with TCP/IP mapping

Clause 15 - FC-BB-2_IP protocol procedures

Clause 16 - FC-BB-2_IP service considerations

Annex A (normative) - Encoded SOF and EOF ordered sets

Annex B (informative) - ATM traffic Management and signalling

Annex C (informative) - SR protocol parameter guidelines and state diagram

Table 1 – FC-BB-2 Organization

Specification Type	Applicable Clauses and Annexes
FC-BB-2_ATM, FC-BB-2_SONET, FC-BB-2_IP	1-4
FC-BB-2_ATM, FC-BB-2_SONET	5, 6
FC-BB-2_ATM	7, 8, 9 Annexes A, B, C
FC-BB-2_SONET	10, 11, 12 Annexes A, C
FC-BB-2_IP	13, 14, 15, 16 Annex A

Documents
Document Sharing Hub
Copyright International Organization for Standardization
Reproduced by IHS under license with ISO
No reproduction or networking permitted without license from IHS
Not for Resale
Full document details: ISO IEC 14161-241-2005

INFORMATION TECHNOLOGY – FIBRE CHANNEL –

PART 241: Backbone 2 (FC-BB-2)

1 Scope

This part of ISO/IEC 14165 defines mappings for transporting Fibre Channel frames across ATM, SONET and TCP/IP backbone networks.

This part of ISO/IEC 14165 consists of three distinct Fibre Channel mappings resulting in the following three specifications:

- FC-BB-2_ATM (FC over ATM backbone network)
- FC-BB-2_SONET (FC over SONET backbone network)
- FC-BB-2_IP (FC over TPC/IP backbone network)

The backbone mappings support the attachment of fibre channel switches using the facilities of the underlying backbone network. Mappings of fibre channel to ATM and SONET are completely specified in this FC-BB-2 standard. With respect to TCP/IP, the FC-BB-2 and IETF Fibre Channel over TCP/IP specifications together describe how Fibre Channel frames are transported over a TCP/IP backbone. The FC-BB-2 standard describes the Fibre Channel characteristics associated with the encapsulation and transportation of Fibre Channel frames using Fibre Channel over TCP/IP. The IETF specifications provide details regarding the encapsulation and transportation of Fibre Channel frames over a TCP/IP backbone.

2 Normative references

The following referenced documents are indispensable for the application of this document. For dated references, only the edition cited applies. For undated references, the latest edition of the referenced document (including any amendments) applies.

2.1 Approved references

[1] ISO/IEC 8802-2, *Information technology – Telecommunications and information exchange between systems – Local and metropolitan area networks – Specific requirements – Part 2: Logical link control*

[2] ISO/IEC 14165-131, *Information technology – Fibre Channel – Part 131: Switch Fabric requirements (FC-SW-3)*

[3] ISO/IEC 14165-241, *Information technology – Fibre Channel – Part 241: Backbone 2 (FC-BB-2) [the present publication]*

[4] ISO/IEC 14165-251, *Information technology – Fibre Channel – Part 251: Framing and Signaling (FC-FS)*

[5] ITU-T Recommendation X.25-1997, *Interface between Data Terminal Equipment (DTE) and Data Circuit-Terminating equipment (DCE) for terminals operating in the packet mode and connected to public data networks by dedicated circuit, X.25-1997*

2.2 Other references

For information on the current status of the listed documents, or regarding availability, contact the relevant organization.

Documents
Document Sharing Hub

Copyright International Organization for Standardization
Reproduced by IHS under license with ISO
No reproduction or networking permitted without license from IHS
Not for Resale
Full document details: ISO IEC 14161-241-2005

[6] T11/Project 1570D/Rev. x.x, *Information Technology - Fibre Channel - Security Protocol (FC-SP)*

[7] IETF draft-ietf-ips-fcovertcpip-12.txt, *Fibre Channel Over TCP/IP (FCIP)*, August 2002

[8] IETF draft-ietf-ips-fcip-slp-04.txt, *Finding FCIP Entities Using SLP,* September 2002

[9] IETF draft-ietf-ips-fcencapsulation-08.txt, *FC frame Encapsulation,* May 2002

[10] IETF RFC 1619, *PPP over SONET/SDH*, May 1994.

[11] IETF RFC 1662, *PPP in HDLC-like Framing*, July 1994.

[12] IETF RFC 2030, *Simple Network Time Protocol (SNTP) Version 4 for IPv4, IPv6 and OSI,* October 1996

3 Definitions and Conventions

3.1 Common Defintions

3.1.1 BBW: Refers to either FC-BB-2_ATM or FC-BB-2_SONET device

3.1.2 B_Port: A Bridge port on a device that implements FC-BB-2_ATM, FC-BB-2_SONET, or FC-BB-2_IP and connects to a FC switch on an E_Port

3.1.3 B_Port_Name: A Name_Identifier that identifies a B_Port for identification purposes. The format of the name is specified in FC-FS. Each B_Port provides an unique B_Port_Name within the Fabric.

3.1.4 BSW: Defined in FC-SW-3 and used as a generic term for a Backbone Switch

3.1.5 E_Port: As defined in FC-SW-3, a Fabric expansion port that attaches to another E_Port to create an Inter-Switch Link.

3.1.6 E_Port_Name: A Name_Identifier that identifies an E_Port for identification purposes. The format of the name is specified in FC-FS. Each E_Port provides an unique E_Port_Name within the Fabric.

3.1.7 Fabric_Name: A Name_Identifier associated with a Fabric.

3.1.8 F_Port: As defined in FC-SW-3, a F_Port is a port to which non-loop N_Ports are attached to a Fabric, and does not include FL_Ports.

3.1.9 F_Port_Name: A Name_Identifier that identifies a F_Port for identification purposes. The format of the name is specified in FC-FS. Each F_Port provides an unique F_Port_Name within the Fabric.

3.1.10 Fabric Initialization: A process for configuring and building a Fabric, as defined in FC-SW-3.

3.1.11 FC-BB-2_ATM: A physical ATM WAN interface specification that interfaces with Fibre Channel switched network on one side and ATM on the other.

3.1.12 FC-BB-2_SONET: A SONET/SDH WAN interface specification that interfaces with Fibre Channel switched network on one side and SONET/SDH on the other.

3.1.13 FC-BB-2_IP: A logical specification that interfaces with Fibre Channel switched network on one side and IP on the other.

Documents
Document Sharing Hub

Copyright International Organization for Standardization
Reproduced by IHS under license with ISO
No reproduction or networking permitted without license from IHS
Not for Resale
Full document details: ISO IEC 14161-241-2005

3.1.14 FC_Port: A port transmitting or receiving FC frames. FC_Ports include N_Ports, F_Ports, E_Ports, B_Ports, VE_Ports, and B_Access.

3.1.15 Fibre Channel Backbone Link: Defined to be any Fibre Channel Inter-switch Link over non Fibre Channel transport. In FC-BB-2, this encompasses FC-BBW_ATM, FC-BBW_SONET and FC-BB-2_IP links. Note that a Fibre Channel Backbone Link may be comprised of more than one physical or logical connection.

3.1.16 Keep Alive Timeout Value (K_A_TOV): The Keep Alive Timeout value is a timer defined in this document that is used by the Link Keep Alive (LKA) ELS as a trigger for issuing LKA. The LKA should be sent at least every K_A_TOV if no traffic has been sent and/or received on the connection. The default value for K_A_TOV is 1/2 E_D_TOV.

3.1.17 Name_Identifier: A 64-bit identifier, with a 60-bit value preceded with a 4-bit Network_Address_Authority Identifier, used to identify entities in Fibre Channel (e.g. N_Port, node, F_Port, or Fabric.).

3.1.18 Node Name: A Name_Identifier associated with a node.

3.1.19 Port_Name: An 8-byte identifier that identifies a port and used for such purposes as diagnostics that may be independent and unrelated to network addressing. Each FC_Port provides a unique Port_Name within the address domain of the Fabric and associated N_Ports.

3.1.20 Simple Flow Control (SFC): SFC is a flow control protocol applied between two FC-BB-2_ATM or FC-BB-2_SONET devices over the ATM/SONET WAN. The SFC protocol mechanism temporarily pauses the transmission of frames from the remote device.

3.1.21 Selective Retransmission (SR) Flow Control: SR Flow Control is a sliding window flow control protocol applied between two FC-BB-2_ATM or FC-BB-2_SONET devices over the ATM/SONET WAN and is used for both flow control and error recovery.

3.1.22 Switch_Name: A Name_Identifier that identifies a Switch or a Bridge device for identification purposes. The format of the name is specified in FC-FS. Each Switch and Bridge device provides a unique Switch_Name within the Fabric.

3.1.23 WAN Interface: An interface that connects to a Wide Area Network; specifically, a port that connects to ATM or SONET/SDH.

3.2 FC-BB-2_ATM Definitions

3.2.1 AAL: ATM Adaptation Layer. A collection of standardized protocols that adapt user traffic to 48-octet payloads that may be placed in a cell-formatted stream. The AAL is subdivided into the Convergence Sublayer (CS) and the Segmentation and Reassembly (SAR) sublayer. There are currently four types of AALs: AAL1, AAL2, AAL3/4, and AAL5 to support the various service categories.

3.2.2 AAL5: AAL Type 5, specified for use in FC-BB-2_ATM. A protocol standard originally intended for variable bit rate traffic, that does not require source-destination timing relation; now also used with applications that have constant bit rate traffic where source-destination timing relation is important.

3.2.3 AAL Service Categories: The ATM Forum has defined 5 Traffic Service Categories supported by the AALs: Constant Bit Rate (CBR), Variable Bit Rate-Real Time (VBR-RT), Variable Bit Rate-Non Real Time (VBR-NRT), Available Bit Rate (ABR), and Unspecified Bit Rate (UBR). VBR_NRT is the recommended service for FC-BB.

3.2.4 ATM: Asynchronous Transfer Mode. Broadband-ISDN standards defined by ITU-T and the ATM Forum.

Documents
Document Sharing Hub
Copyright International Organization for Standardization
Reproduced by IHS under license with ISO
No reproduction or networking permitted without license from IHS
Not for Resale
Full document details: ISO IEC 14161-241-2005

3.2.5 ATM QoS Parameters: QoS is a term used to refer to the set of performance characteristics of the contracted ATM connection. Six QoS parameters are defined: Peak-to-peak Cell Delay Variation (CDV), Maximum Cell Transfer Delay (maxCTD), Cell Loss Ratio (CLR), Cell Error Ratio (CER), Severely Errored Cell Block Ratio (SECBR), Cell Misinsertion Rate (CMR).

3.2.6 ATM Traffic Descriptor: A term used to describe the traffic characteristics of an ATM connection. A Connection Traffic Descriptor includes a Source Traffic Descriptor, CDV Tolerance (CDVT), and a Conformance definition. A Source Traffic Descriptor is described by three parameters: Peak Cell Rate (PCR), Sustainable Cell Rate (SCR), Maximum Burst Size (MBS), and a Minimum Cell Rate (MCR).

3.2.7 Cell Loss Priority (CLP): A one-bit field in the ATM cell header specifying whether the cell is more (CLP=1) or less (CLP=0) likely to be discarded by an ATM network experiencing congestion.

3.2.8 Cell Loss Ratio (CLR): A QoS parameter that gives the ratio of lost cells to the total number of transmitted cells.

3.2.9 Connection Admission Control (CAC): Actions taken by the ATM network to accept or reject a connection request based on its QoS and traffic parameter requirements and then to route this connection across the network.

3.2.10 Convergence Sublayer Protocol Data Unit: The PDU used at the CS for passing information between the higher layers and the SAR (that is located below the CS, where the cell conversion takes place).

3.2.11 GCRA: Generic Cell Rate Algorithm is a method applied at the network side of the UNI to test the conformance of an ATM cell to its traffic contract.

3.2.12 Operations, Administration, and Maintenance (OAM): Management framework defined by the ITU. OAM cells are special purpose ATM cells exchanged between an ATM end-system and an ATM switch and between ATM switches. OAM cells are used for network fault and performance management and analysis.

3.2.13 Permanent Virtual Circuit (PVC): A preconfigured logical connection between two ATM systems.

3.2.14 Permanent Virtual Connection (PVC): The ATM term for a Permanent Virtual Circuit between ATM switches. The terms may be used interchangeably.

3.2.15 Quality of Service: A term that refers to the set of ATM performance parameters that characterize the transmission quality over a given virtual connection (VC). These parameters include the CTD, CDV, CER, CLR, CMR, and SECBR.

3.2.16 Switched Virtual Call: A generic term that refers to Switched Virtual Circuits and connections.

3.2.17 Switched Virtual Circuit: A logical ATM connection established via signaling. End systems transmit UNI 3.1/4.0 signaling requests via the Q.2931 Signaling Protocol.

3.2.18 Switched Virtual Connection (SVC): The ATM term for switched virtual circuit.

3.2.19 Usage Parameter Control (UPC): A set of policing mechanisms implemented by the network at the UNI to monitor and control traffic submitted by each end user.

3.2.20 User-Network Interface (UNI): The interface, defined as a set of protocols and traffic characteristics, between the customer premises equipment and the ATM networks. FC-BB requires ATM Forum UNI 3.1 or above.

Documents
Document Sharing Hub
Copyright International Organization for Standardization
Reproduced by IHS under license with ISO
No reproduction or networking permitted without license from IHS
Not for Resale
Full document details: ISO IEC 14161-241-2005

3.2.21 Virtual Channel: A term used to describe one of several logical connections defined within one virtual path (VP) between two ATM devices.

3.2.22 Virtual Channel Connection (VCC): Defined as a concatenation of Virtual Channel Links (VCLs). Switching cells within an ATM switch for a given VCC is based on the VPI/VCI value indicated on the cell header.

3.2.23 Virtual Circuit (VC): A connection that is set up across the network between a source and a destination where a fixed route is chosen for the entire session and bandwidth and ID dynamically allocated to the user.

3.2.24 Virtual Path (VP): A logical connection between two ATM devices (CPEs, switches). A virtual path consists of a set of virtual channels.

3.2.25 Virtual Path Connection (VPC): Defined as a concatenation of virtual path links (VPLs). Switching cells within an ATM switch for a given VPC is based on the VPI value indicated on the cell header.

3.2.26 Virtual Path Identifier/Virtual Channel Identifier (VPI/VCI): The combination of two numbers, namely the VPI and the VCI, used to identify a virtual connection (VC) and switch cells in an ATM network.

3.3 FC-BB-2_SONET Definitions

3.3.1 Administrative Unit (AU): A SDH-specific information structure, consisting of a STS SPE and its associated set of STS pointer/pointer action bytes.

3.3.2 Concatenated Synchronous Transport Signal Level *N* (STS-*N*c): A STS-*N* Line layer signal in which the STS Envelope Capacities from the *N* STS-1s have been combined to carry a STS-*N*c Synchronous Payload Envelope (SPE) that shall be transported not as several separate signals but as a single entity. The equivalent SDH term for a STS-3c SPE is a VC-4.

3.3.3 Container: A SDH term that is equivalent to the payload capacity of a synchronous payload envelope.

3.3.4 Generic Framing Procedure (GFP): A simple, robust method for adaptation to octet-synchronous transport facilities, of frame- or character-oriented data traffic; specified by ITU-T Study Group 15 [5].

3.3.5 Operations, Administration and Maintenance (OAM): Management framework defined by the ITU. OAM cells are special purpose ATM cells exchanged between an ATM end-system and an ATM switch and between ATM switches. OAM cells are used for network fault and performance management and analysis.

3.3.6 Optical Carrier Level N (OC-N): The optical signal that results from an optical conversion of a STS-*N* signal. SDH does not make the distinction between a logical signal (e.g. STS-1 in SONET) and a physical signal (e.g. OC-1 in SONET). The equivalent SDH term for both logical and physical signals is synchronous transport module level M (STM-M), where M=(N/3). There are equivalent STM-M signals only for values of N=3,12,48, and 192.

3.3.7 Path: A logical connection between the point at which a standard frame format for the signal at the given rate is assembled and the point at which the standard frame format for the signal is disassembled. The equivalent SDH term is also Path.

3.3.8 Payload Pointer: The pointer that indicates the location of the beginning of the Synchronous Payload Envelope. The equivalent SDH term is pointer.

3.3.9 SONET: An acronym for Synchronous Optical NETwork. SONET is a term in general usage, that refers to the rates and formats specified in ANSI T1.105

Documents
Document Sharing Hub
Copyright International Organization for Standardization
Reproduced by IHS under license with ISO
No reproduction or networking permitted without license from IHS
Not for Resale
Full document details: ISO IEC 14161-241-2005

3.3.10 STS Path Terminating Equipment (STS PTE): Network Elements that multiplex/demultiplex the STS payload. STS PTEs may originate, access, modify or terminate the STS Path Overhead necessary to transport the STS payload, or may perform any combination of these actions.

3.3.11 Super-rate Signals: A signal that has to be carried by a Concatenated Synchronous Transport Signal level Nc (STS-Nc). There is no equivalent SDH term.

3.3.12 Synchronous Digital Hierarchy (SDH): A family of ITU-T standards whose technical contents closely resemble that found for the SONET family of ANSI standards.

3.3.13 STS Synchronous Payload Envelope (STS SPE): A 125-microsecond frame structure composed of STS Path Overhead and bandwidth for payload. The term generically refers to STS-1 SPEs and STS-Nc SPEs. The equivalent SDH term for STS-1 SPE is virtual container level 3 (VC-3). The equivalent SDH term for STS-3c SPE is virtual container level 4 (VC-4). The equivalent SDH term for STS-Nc SPE (N>3) is virtual container level 4-Xc (VC-4-Xc), where X=(N/3).

3.3.14 Synchronous Transport Module Level M (STM-M): These are the defined transport signals for the Synchronous Digital Hierarchy (SDH). Defined signals exist at rates of M times 155,52 Mbit/s, where M=1, 4, 16, or 64. These are equivalent to SONET OC-N signals, where N=3M.

3.3.15 Synchronous Transport Signal Level N (STS-N): This signal is obtained by byte interleaving N STS-1 signals together. The rate of the STS-N is N times 51,840 Mbit/s. SDH does not make the distinction between a logical signal (e.g. STS-N in SONET) and a physical signal (e.g. OC-N in SONET). The equivalent SDH term for both logical and physical signals is synchronous transport module level M (STM-M), where M=(N/3). There are equivalent STM-M signals only for values of N=3, 12, 48, and 192.

3.3.16 Tributary Unit (TU): The SDH term for SONET virtual tributaries.

3.3.17 Virtual Container (VC): A SDH term for either a STS or VT SPE.

3.3.18 Virtual Tributary (VT): A structure designed for transport and switching of sub-STS-1 payloads. There are currently four sizes of VT. The equivalent SDH term is tributary unit (TU).

3.4 FCIP and TCP/IP Definitions

3.4.1 B_Access: A component of the FC Entity that interfaces with the FCIP_LEP component of the FCIP Entity on one side and the B_Port on the other.

3.4.2 B_Access_Name: Port_Name of the B_Access portal.

3.4.3 B_Access Virtual ISL: A Virtual ISL that connects two B_Access portals.

3.4.4 Control and Service Module (CSM): A control component of the FC-BB-2_IP interface that mainly handles Connection Management. CSM interfaces with the PMM.

3.4.5 Encapsulated FC Frame: A FC-BB-2_IP term to mean a SOF/EOF delimited FC frame prefixed with a 28-byte FC frame Encapsulation Header.

3.4.6 Encapsulated Frame Receiver Portal: The TCP access point through which an Encapsulated FC Frame is received from the IP network by a FCIP_DE.

3.4.7 Encapsulated Frame Transmitter Portal: The TCP access point through which an Encapsulated FC Frame is transmitted to the IP network by the FCIP_DE.

3.4.8 FC Entity: The FC Entity is the principal interface point to the FC switched network on one side and, in combination with the FCIP entity,to the IP network on the other side. It is the data

Documents
Document Sharing Hub
Copyright International Organization for Standardization
Reproduced by IHS under license with ISO
No reproduction or networking permitted without license from IHS
Not for Resale
Full document details: ISO IEC 14161-241-2005

forwarding component of the FC-BB-2_IP interface consisting of VE_Port(s) and/or B_Access portals.

3.4.9 FC Entity Protocol Layer: The protocol layer that lies between the Fibre Channel level FC-2 and the FCIP Entity protocol layer. Its primary function is supporting one or more Virtual E_Ports or B_Access portals and communicating with the FCIP Entity.

3.4.10 FC Receiver Portal: The access point through which a FC frame and time stamp enters a FCIP_DE from the VE_Port/B_Access.

3.4.11 FC Transmitter Portal: The access point through which a FC frame and time stamp leaves a FCIP_DE to the VE_Port/B_Access.

3.4.12 FC-BB-2_IP Device: A device that supports the FC-BB-2_IP, FC network and the IP network interfaces.

3.4.13 FC-BB-2_IP Interface: The point that has interfaces to the FC switched network on one side and the IP network on the other. It consists of a Switching Element, FC/FCIP Entity pair(s), the CSM, and the PMM.

3.4.14 FCIP Data Engine (FCIP_DE): The data forwarding component of the FCIP Entity's FCIP_LEP that handles FC frame encapsulation, de-encapsulation, and transmission of encapsulated frames through a single TCP connection.

3.4.15 FCIP Entity: The data forwarding component of the FC-BB-2_IP interface consisting of the FCIP_LEP and is the principal interface point to the IP network on one side and, in combination with the FC Entity, to the FC switched network on the other. Its primary function is formatting, encapsulating, and forwarding Encapsulated FC Frames across the IP network interface.

3.4.16 FCIP Entity Protocol Layer: The protocol layer that lies between the FC Entity layer and the TCP layer.

3.4.17 FCIP frame: The FCIP [7] term for an Encapsulated FC Frame.

3.4.18 FCIP Link: A virtual link that connects a FCIP_LEP in one FC-BB-2_IP device with another. It consists of one or more TCP connections.

3.4.19 FCIP Link Originator and Acceptor: The FC-BB-2_IP FCIP_LEP that *originates* a FCIP Link is defined as the ***FCIP Link Originator***. The corresponding FCIP_LEP that *accepts* this link is defined as the ***FCIP Link Acceptor***.

3.4.20 FCIP Link Endpoint (FCIP_LEP): The component of a FCIP Entity that contains one or more FCIP_DEs.

3.4.21 FCIP Transit Time (FTT): The total transit time of an Encapsulated Fibre Channel frame in the IP network. The FCIP Transit Time is calculated by subtracting the time stamp value in the arriving Encapsulated FC Frame from the synchronized time in the FCIP Entity.

3.4.22 Platform Management Module (PMM): A management component of the FC-BB-2_IP interface that handles Time Synchronization, Discovery and Security. It interfaces with the CSM.

3.4.23 Request For Comment (RFC): Documents put out by the Internet-Related organizations.

3.4.24 Virtual E_Port (VE_Port): The data forwarding component of the FC Entity that emulates an E_Port. The term *Virtual* indicates the use of a non Fibre Channel link connecting the VE_Ports. In the case of the FC-BB-2_IP specification, a VE_Port interfaces with the FCIP_LEP component of the FCIP Entity on one side and a Fibre Channel Switching Element on the other side.

3.4.25 VE_Port_Name: Port_Name of the VE_Port.

Documents
Document Sharing Hub
Copyright International Organization for Standardization
Reproduced by IHS under license with ISO
No reproduction or networking permitted without license from IHS
Not for Resale
Full document details: ISO IEC 14161-241-2005

3.4.26 VE_Port Virtual ISL: A Virtual ISL that connects two VE_Ports.

3.4.27 Virtual ISL: An ISL that connects two VE_Ports or two B_Access portals across a non-Fibre Channel Link

3.5 Symbols and abbreviations

3.5.1 General

≠ or NE	not equal
≤ or LE	less than or equal to
±	plus or minus
≈	approximately
x	multiply
+	add
-	subtract
< or LT	less than
= or EQ	equal
> or GT	greater than
≥ or GE	greater than or equal to
BB	Backbone
BB-2	Backbone -2
BBW	Backbone (ATM or SONET) WAN
BSW	Border Switch
EBP	Exchange B_Access Parameters
ELP	Exchange Link Parameters
EOF	End of Frame
ESC	Exchange Switch Capabilities
FCIP	Fibre Channel Over TCP/IP [7]
FCS	Frame Check Sequence
FC-SP	Fibre Channel - Security Protocol [6]
FC-SW-3	Fibre Channel - Switched Fabric [2]
ISL	Inter-switch Link
ITU-T	Internat'l Telecomm. Union - Telecommunication Standardization Section
K_A_TOV	Keep Alive Timeout value
LKA	Link Keep Alive
MTU	Maximum Transfer Unit
PDU	Protocol Data Unit
SFC	Simple Flow Control
SOF	Start of Frame
SR	Selective Retransmission
SW_ACC	Switch Fabric Internal Link Service Accept
SW_CS	Switch Fabric Common Services
SW_ILS	Switch Fabric Internal Link Services
SW_RJT	Switch Fabric Internal Link Service Reject
WAN	Wide Area Network

3.5.2 FC-BB-2_ATM

AAL5	ATM Adaptation Layer 5
ATM	Asynchronous Transfer Mode
BER	Bit Error Rate
CLR	Cell Loss Ratio (ATM)
CPCS	Common Part Convergence Sublayer
PVC	Permanent Virtual Circuit, Permanent Virtual Connection

Documents
Document Sharing Hub
Copyright International Organization for Standardization
Reproduced by IHS under license with ISO
No reproduction or networking permitted without license from IHS
Not for Resale
Full document details: ISO IEC 14161-241-2005

QoS	Quality of Service
SAAL	Signaling ATM Adaptation Layer
SVC	Switched Virtual Circuit, Switched Virtual Connection
UBR	Unspecified Bit Rate (ATM)
UNI	User Network Interface (ATM)
VBR-NRT	Variable Bit Rate - Non Real Time (ATM)
VC	Virtual Circuit

3.5.3 FC-BB-2_SONET

HDLC	High-level Data Link Control
nm	Nanometer
OC-N	Optical Carrier Level *N*
ppm	Parts per Million
PPP	Point-to-Point Protocol
PTE	Path Terminating Equipment
RFC	Request for Comment
SDH	Synchronous Digital Hierarchy
SMT	Station Management (FDDI)
SONET	Synchronous Optical Network
SPE	Synchronous Payload Envelope
STM-M	Synchronous Transport Module level *M*
STS	Synchronous Transport Signal
STS-N	Synchronous Transport Module level *N*
STS-Nc	Synchronous Transport Module level *Nc*
TU	Tributary Unit
ULA	48-bit Universal LAN MAC Address
ULP	Upper Level Protocol
ULP_TOV	Upper_Level_Protocol_Timeout value
VC	Virtual Container
VP	Virtual Path
VT	Virtual Tributary

3.5.4 FC-BB-2_IP

B_Access	B_Access Portals
CSM	Control and Service Module
FCIP	FC over TCP/IP [7]
FCIP_DE	FCIP Data Engine
FCIP_LEP	FCIP Link Endpoint
IETF	IETF Internet Engineering Task Force (www.ietf.org)
PMM	Platform Management Module
RFC	Request For Comment
VE_Port	Virtual E_Port

3.6 Keywords

3.6.1 expected

A keyword used to describe the behavior of the hardware or software in the design models assumed by this technical report. Other hardware and software design models may also be implemented.

3.6.2 invalid

A keyword used to describe an illegal or unsupported bit, byte, word, field or code value. Receipt of an invalid bit, byte, word, field or code value shall be reported as an error.

Documents
Document Sharing Hub
Copyright International Organization for Standardization
Reproduced by IHS under license with ISO
No reproduction or networking permitted without license from IHS
Not for Resale
Full document details: ISO IEC 14161-241-2005

3.6.3 mandatory

A keyword indicating an item that is required to be implemented as defined in this technical report.

3.6.4 may

A keyword that indicates flexibility of choice with no implied preference (equivalent to “may or may not”).

3.6.5 may not

A keyword that indicates flexibility of choice with no implied preference (equivalent to “may or may not”).

3.6.6 obsolete

A keyword indicating that an item was defined in prior Fibre Channel standards but has been removed from a subsequent Fibre Channel standard.

3.6.7 optional

A keyword that describes features that are not required to be implemented by the referenced standard. However, if any optional feature is implemented, then it shall be implemented as defined in the referenced standard.

3.6.8 reserved

A keyword referring to bits, bytes, words, fields and code values that are set aside for future standardization. A reserved bit, byte, word or field shall be set to zero, or in accordance with a future extension. Recipients are not required to check reserved bits, bytes, words or fields for zero values. in defined fields, receipt of reserved code values shall be reported as an error.

3.6.9 shall

A keyword indicating a mandatory requirement. Designers are required to implement all such mandatory requirements to ensure inter operability with other products that conform to this technical report.

3.6.10 should

A keyword indicating flexibility of choice with a strongly preferred alternative; equivalent to the phrase “it is strongly recommended”.

3.7 Conventions

Certain words and terms used in this International Standard have a specific meaning beyond the normal English meaning. These words and terms are defined either in clause 3 or in the text where they first appear. Names of signals, phases, messages, commands, statuses, sense keys, additional sense codes, and additional sense code qualifiers are in all uppercase (e.g., REQUEST SENSE), names of fields are in small uppercase (e.g., STATE OF SPARE), lower case is used for words having the normal English meaning.

Fields containing only one bit are usually referred to as the name bit instead of the name field.

Numbers that are not immediately followed by lower-case b or h are decimal values.

Numbers immediately followed by lower-case b (xxb) are binary values.

Numbers immediately followed by lower-case h (xxh) are hexadecimal values.

Documents
Document Sharing Hub
Copyright International Organization for Standardization
Reproduced by IHS under license with ISO
No reproduction or networking permitted without license from IHS
Not for Resale
Full document details: ISO IEC 14161-241-2005

Decimals are indicated with a comma (e.g., two and one half is represented as 2,5).

Decimal numbers having a value exceeding 999 are represented with a space (e.g., 24 255).

An alphanumeric list (e.g., a,b,c or A,B,C) of items indicate the items in the list are unordered.

A numeric list (e.g., 1,2,3) of items indicate the items in the list are ordered (i.e., item 1 is required occur or complete before item 2).

In the event of conflicting information the precedence for requirements defined in this standard is:

1) text,
2) tables, then
3) figures.

A comparison of the ISO conventions are shown in Table 2.

Table 2 – ISO and International Conventions

ISO	International
0,6	0.6
1 000	1,000
1 323 462,9	1,323,462.9

3.8 Notations for Procedure and Functions

Procedure Name ([input:1a|input:1b|input:1c][,input:2a+input:2b]...[input:n]||
[output:1][,output:2]...[output:n])

Where:

Procedure Name:	A descriptive name for the function to be performed.
"(...)":	Parentheses enclosing the lists of input and output arguments.
input:1a|input:1b|…	A number of arguments of which only one shall be used in any single procedure
input:1, input:2, ...:	A comma-separated list of names identifying caller-supplied input data objects.
output:1, output:2, ...:	A comma-separated list of names identifying output data objects to be returned by the procedure.
"||":	A separator providing the demarcation between inputs and outputs. Inputs are listed to the left of the separator; outputs, if any, are listed to the right.
"[...]":	Brackets enclosing optional or conditional parameters and arguments.
"|":	A separator providing the demarcation between a number of arguments of which only one shall be used in any single procedure.
"+":	A collection of objects presented to a single object. No ordering is implied.

Documents
Document Sharing Hub
Copyright International Organization for Standardization
Reproduced by IHS under license with ISO
No reproduction or networking permitted without license from IHS
Not for Resale
Full document details: ISO IEC 14161-241-2005

4 FC-BB-2 Structure and Concepts

4.1 FC-BB-2 Backbone Mappings

The three distinct Fibre Channel mappings: FC over ATM, FC over SONET, and FC over TCP/IP, pertain to the extension of Fibre Channel switched networks across distances. An important distinction between the above mappings is the emphasis placed on the *backbone type*. The FC over ATM and SONET network mappings layer on the ATM and SONET backbone technologies, resulting in the FC-BB-2_ATM and FC-BB-2_SONET specifications that map directly to physical connections. The FC over TCP/IP network mapping layers on the IP network, resulting in the FC-BB-2_IP specification that maps to a logical connection.

4.2 FC-BB-2 Reference Models

FC-BB-2 defines three reference models corresponding to the FC-BB-2_ATM, FC-BB-2_SONET, and FC-BB-2_IP specifications. These reference models are shown in Figures 2, 3, and 4. In the figures a B_ (E_ or F_) Port is the point at which a frame destined to a remote FC network enters the Port and is forwarded on the backbone network to its destination. All frames arriving on the backbone network exit the B_ (E_ or F_) Port towards its ultimate destination.

The FC-BB-2_ATM and the FC-BB-2_SONET specifications supports the attachment of FC switches via one or more B_Ports. The FC-BB-2_IP specification supports the attachment of FC switches via one or more B_ or E_Ports and the attachment of Fibre Channel Host Bus Adapters via one or more F_Ports. Table 3 summarizes the FC Port types support for the three types of specifications.

Table 3 – Specification and FC Port Types Supported

Port(s) Support	Specification Type		
	FC-BB-2_ATM	FC-BB-2_SONET	FC-BB-2_IP
B_Port	Specified	Specified	Specified
E_Port	Not Specified	Not Specified	Specified
F_Port	Not Specified	Not Specified	Specified

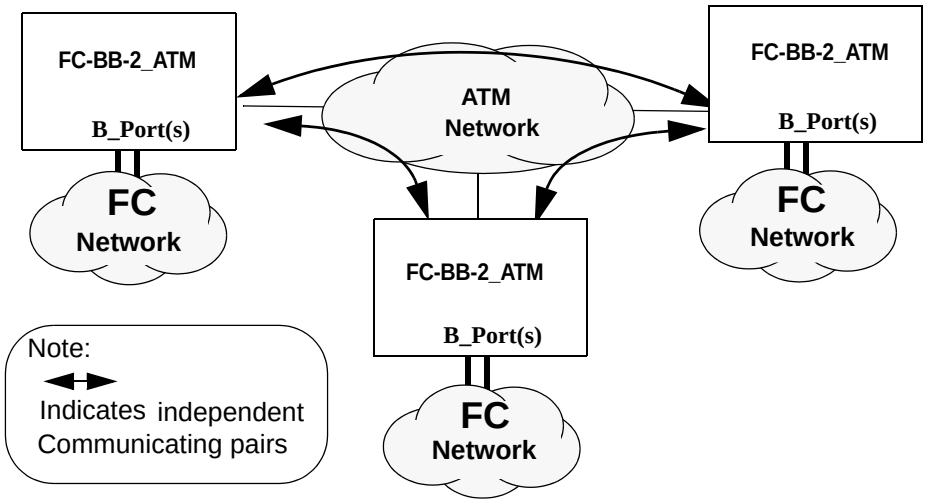

Figure 2 – FC-BB-2_ATM Reference Model

Copyright International Organization for Standardization
Reproduced by IHS under license with ISO
No reproduction or networking permitted without license from IHS
Not for Resale
Full document details: ISO IEC 14161-241-2005

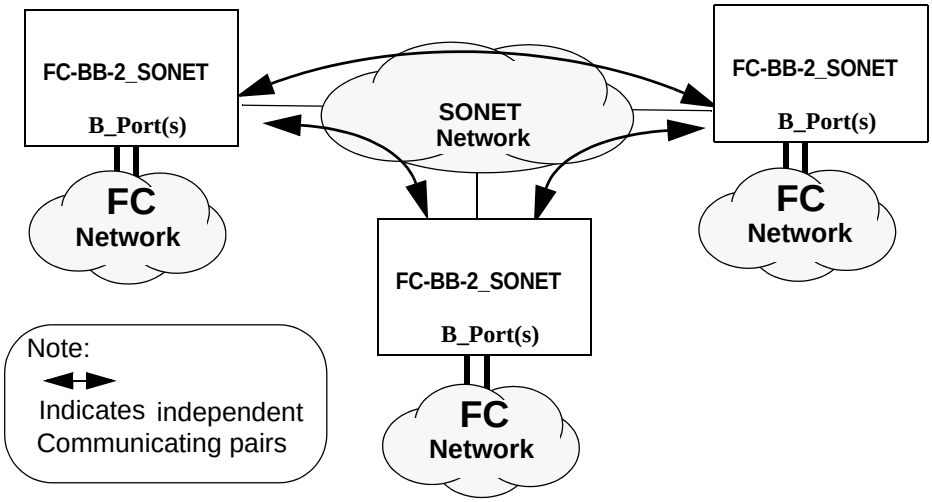

Figure 3 – FC-BB-2_SONET Reference Model

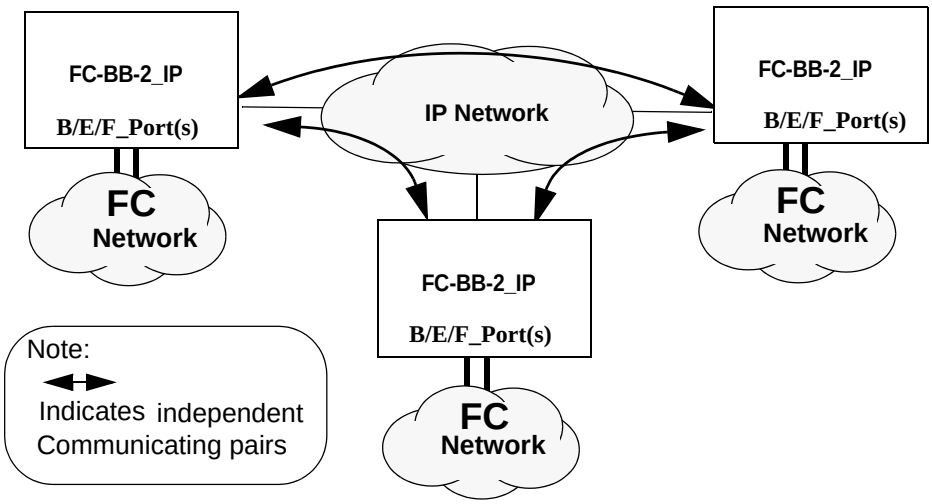

Figure 4 – FC-BB-2_IP Reference Model

4.3 FC-BB-2 Specifications Overview

4.3.1 FC-BB-2_ATM

FC-BB-2_ATM (specification) is the means by which Fibre Channel networks interface with and connect across a wide-area ATM network. FC-BB-2_ATM defines the frame mapping, encapsulation, and any signaling required by the ATM protocols. FC-BB-2_ATM also defines the frame handling, call handling, addressing, flow control protocol and error recovery required to support the Fibre Channel mapping over ATM. FC-BB-2_ATM makes use of the ATM Adaptation Layer 5 for payload transport.

Documents
Document Sharing Hub
Copyright International Organization for Standardization
Reproduced by IHS under license with ISO
No reproduction or networking permitted without license from IHS
Not for Resale
Full document details: ISO IEC 14161-241-2005

FC-BB-2_ATM messages are formed by encapsulating byte-encoded Class 2, 3, 4 or F Fibre Channel frames into a suitable format for carriage over the WAN. Clause 5 describes the FC-BB-2_ATM message in detail.

The SR and SFC are two flow control protocols that may be used over the ATM networks. The SR protocol provides for reliable transport of frames between two FC-BB-2_ATM devices. Use of the SR protocol is optional. The SR protocol is an efficient sliding window link-layer full-duplex protocol that supports data transport with flow control and error recovery functions. SR has been adopted from ITU's Link Access Protocol B (LAPB), that is derived from ISO/IEC's High-level Data Link Control (HDLC) (Balanced Classes). Use of LAPB in SR is limited to a subset of the synchronous modulo 32768 super sequence numbering service option. Clause 6 describes the SR protocol in detail. The SFC Protocol (see 6.4) provides a mechanism to temporarily pause the transmission of frames from a remote FC-BB-2_ATM device. Use of the SFC protocol is optional.

4.3.2 FC-BB-2_SONET

FC-BB-2_SONET (specification) is the means by which Fibre Channel networks interface with and connect across a wide-area SONET/SDH network. FC-BB-2_SONET defines the frame mapping, encapsulation, and any signaling required by the SONET protocols. FC-BB-2_SONET also defines the frame handling, call handling, addressing, flow control protocol and error recovery required to support the Fibre Channel mapping over SONET/SDH. FC-BB-2_SONET makes use of the High-level data link control (HDLC) for payload transport

NOTE 1 The FC over SONET mapping defined in FC-BB-2_SONET is different from the native FC mapping over the Transparent Mapped Generic Framing Procedure (GFP-T) defined in [5]. This native mapping is essentially a FC "wire-extender" between two FC Ports using other technologies and its protocol operations are completely transparent to the connecting FC Ports. As such, this native mapping provides a transparent point-to-point Fibre Channel extension between any of the FC Port types (e.g., N_Port-to-N_Port, N_Port-to-F_Port, E_Port-to-E_Port, etc.), and will not be discussed further in the FC-BB-2 specifications.

The SR and SFC flow control protocols may be used over the SONET networks.

4.3.3 FC-BB-2_IP

FC-BB-2_IP specification is the means by which Fibre Channel networks interface with and connect across an IP network. FC-BB-2_IP makes use of the FCIP specification [7] to define the mapping and control required by the TCP/IP protocol and the FC frame encapsulation specification [9] to define the encapsulation. FC-BB-2_IP also defines the connection management, addressing, time synchronization, discovery, security, switching, routing, and error recovery required to support Fibre Channel over TCP/IP. FC-BB-2_IP is agnostic about the underlying physical technology that exists beneath the IP layer. In this sense, the IP network could use ATM, SONET, Gigabit Ethernet or any other link level technology below it.

FC-BB-2_IP encapsulates byte-encoded Class 2, 3, 4 or F Fibre Channel frames into a suitable format (Encapsulated FC Frames) for carriage over the IP network. Clause 14 describes Encapsulated FC Frames in detail.The TCP/IP protocol suite provides a reliable transport of frames over the IP network. TCP provides flow control and error recovery.

The FC-BB-2_IP protocol provides mechanisms to create Virtual E_Port or B_Access connectivity as the case may be, over the IP network (see Clause 13).

4.4 FC-BB-2 Requirements

4.4.1 Fibre Channel Class support

i) Class F shall be supported between FC-BB-2 devices. Class 2, 3 or 4 may be supported between FC-BB-2 devices.

NOTE 2 FC-BB-2 does not support Class 1.

Documents
Document Sharing Hub
Copyright International Organization for Standardization
Reproduced by IHS under license with ISO
No reproduction or networking permitted without license from IHS
Not for Resale
Full document details: ISO IEC 14161-241-2005

4.4.2 Payload transparency

i) Arriving Class 2, 3, 4, and F Fibre Channel frames from a FC network and destined to a remote FC network shall be encapsulated using the FC-BB-2 defined mechanisms and transmitted to the appropriate FC-BB-2 device.

ii) Arriving Encapsulated Frames received from remote FC-BB-2 device shall be deencapsulated and sent to a FC network.

4.4.3 Latency delay and timeout value

i) FC-BB-2_IP shall ensure that the incoming Encapsulated FC Frames whose FTT exceeds 1/2 E_D_TOV shall be discarded and not admitted into the FC network. Fibre Channel Timeout values shall be administratively set to accommodate the FTT.

ii) FC-BB-2_IP shall allow Class F Encapsulated FC Frames to be transmitted with a zero timestamp value.

4.4.4 QoS and bandwidth

i) FC-BB-2_ATM shall use the VBR-NRT ATM Service. VBR-NRT ATM Service provides cell loss and bandwidth guarantees. It is recommended that FC-BB-2_ATM make use of a single Virtual Circuit (VC). Use of additional VCs to address special traffic QoS requirements is allowed but not recommended. FC-BB-2_ATM recommends allocating a minimum bandwidth for each FC-BB-2_ATM VC that is used in order to avoid starvation; however, the Service discipline (prioritization) for the VCs is implementation specific and beyond the scope of this standard.

ii) FC-BB-2_SONET has no specific SONET service required.

iii) FC-BB-2_IP recommends that some form of preferential QoS be used for the FCIP traffic in the IP network to minimize latency and packet drops although no particular form of QoS is recommended; see [7].

4.4.5 In-order delivery

i) FC-BB-2_ATM shall guarantee in-order delivery of frames within each ATM VC. No other ordering relationship across ATM VCs need be preserved.

ii) FC-BB-2_SONET shall guarantee in-order delivery of frames within each SONET/SDH provisioned path. No other ordering relationship across SONET/PDH provisioned paths need be preserved.

iii) FC-BB-2_IP shall guarantee in-order delivery of frames within the scope of any TCP connection.

4.4.6 Flow control

i) FC-BB-2_ATM or FC-BB-2_SONET devices may use the Selective Retransmission (SR) protocol to provide a reliable delivery of frames over the WAN between two devices. In the case of FC-BB-2_ATM, if SR protocol is used, then the flow control is separately applied to each ATM VC.

ii) FC-BB-2_ATM or FC-BB-2_SONET devices may use Simple Flow Control (SFC) protocol to temporarily pause the transmission of frames from a remote device. In the case of FC-BB-2_ATM, if SFC protocol is used, then the flow control is separately applied to each ATM VC.

iii) FC-BB-2_IP devices using the TCP Flow control and error recovery should act in concert with the Fibre Channel Buffer-to-Buffer Credit mechanism.

Documents
Document Sharing Hub
Copyright International Organization for Standardization
Reproduced by IHS under license with ISO
No reproduction or networking permitted without license from IHS
Not for Resale
Full document details: ISO IEC 14161-241-2005

iv) Flow Control at the E_Ports, F_Ports, VE_Ports, and B_Ports will operate as defined in FC-SW-3.

4.5 FC-BB-2 Link Service Codes

Table 4 shows all the SW_ILS codes allocated for FC-BB-2 use.

Table 4 – FC-BB-2 SW_ILS Codes

Encoded Value (hex)	Description	Abbr.
28 03 00 00	Authentication Special Frame Request	ASF
28 01 00 00	Exchange B_Access Parameter	EPB

Table 5 shows all the ELS codes used in FC-BB-2.

Table 5 – FC-BB-2 ELS Codes

Encoded Value (hex)	Description	Abbr.
80 00 00 00	Link Keep Alive Request	LKA

Documents
Document Sharing Hub
Copyright International Organization for Standardization
Reproduced by IHS under license with ISO
No reproduction or networking permitted without license from IHS
Not for Resale
Full document details: ISO IEC 14161-241-2005

5 FC-BB-2_ATM and FC-BB-2_SONET messages and formats

5.1 Applicability

This Clause only applies to FC-BB-2_ATM and FC-BB-2_SONET. See Clause 14 for a description of the FC-BB-2_IP messages and formats.

5.2 Message Formats

In all text to follow, the term BBW applies to both FC-BB-2_ATM and FC-BB-2_SONET. The structure of a BBW message is given in Table 6. It consists of 3 fields: LLC/SNAP Header, BBW_Header, and the BBW message payload. The structures of the fields are given in Tables 7, 9, 11, and 12.

Table 6 – BBW message structure

	Field	Size (Bytes)
BBW message	LLC/SNAP Header	8
	BBW_Header	4
	BBW message payload	Max: 2 148

5.2.1 LLC/SNAP Header format

LLC/SNAP Header (8 bytes): The Logical Link Control (LLC)/Sub Network Access Protocol (SNAP) Header consists of a 3-byte LLC field and a 5-byte SNAP sub-field.

Table 7 – LLC/SNAP Header

Field		Word	Byte	Encoded Value (hex)
LLC	DSAP	0	0	AA
	SSAP		1	AA
	CTRL		2	03
SNAP	OUI	0	3	00
		1	0	00
		1	1	00
	PID	1	2	xx
		1	3	xx

LLC (3 bytes): The LLC field consists of 3 1-byte sub-fields: Destination Service Access Point (DSAP), Source Service Access Point (SSAP), and Control (CTRL). The encoding for LLC given in Table 7 indicates that an ISO/IEC 8802-2 [1] SNAP follows.

SNAP (5 bytes): The SNAP field consists of 2 sub-fields: A 3-byte Organizationally Unique Identifier (OUI) sub-field and a 2-byte Protocol Identification (PID) sub-field. The encoding for OUI given in Table 7 indicates the presence of an ISO/IEC 8802-2 [1] Routed protocol in the payload. The structure of the SNAP/PID sub-field is given in Table 8.

Documents
Document Sharing Hub
Copyright International Organization for Standardization
Reproduced by IHS under license with ISO
No reproduction or networking permitted without license from IHS
Not for Resale
Full document details: ISO IEC 14161-241-2005

Table 8 – SNAP PID

Encoded Value <Byte 2:3> (hex)	Payload Protocol Type
0800	IP
888D	Fibre Channel
Others	*Reserved*

SNAP PID (2 bytes): The SNAP PID sub-field indicates the payload protocol type. Table 8 shows encodings for IP and the Fibre Channel payload protocol types. All BBW messages make use of only the Fibre Channel payload protocol type.

5.2.2 BBW_Header format

The 4-byte BBW_Header (Table 9) consists of 3 fields: A 1-byte Flow Control Type field, a 2-byte PAUSE field and a 1-bit Address Bit field. The structure of the Flow Control Field is given in Table 10.

Table 9 – BBW_Header

Word	Byte	Field	Size (Bytes)	Remarks
2	0	Flow Control Type	1	
	1-2	PAUSE	2	Applicable only when SFC protocol is specified as the Flow Control Type
	3	<bit 0>: Address bit 1= Command; 0 = Response <bits 1-7>: *Reserved*	1	Applicable only when SR protocol is specified as the Flow Control Type

Flow Control Type (1 byte): This field defines encodings for Simple Flow Control (SFC) and SR Flow Control.

Table 10 – Flow Control Protocol Type Encodings

Encodings (hex)	Flow Control Type
00	Simple Flow Control
01	SR Flow Control
Others	*Reserved*

PAUSE (2 bytes): This 2-byte PAUSE field is applicable only when the Flow Control Type is SFC. The PAUSE field defines the number of 512-bit time units to pause transmission. A value of zero indicates zero pause transmission time units. This field is also set to zero value when no flow control is desired with the Flow Control Type specified as SFC.

Address Bit (bit 0: Byte 3): This field is applicable only when the Flow Control Type is SR Flow Control. This bit identifies the SR message as either a Command or a Response. Messages contain-

Documents
Document Sharing Hub
Copyright International Organization for Standardization
Reproduced by IHS under license with ISO
No reproduction or networking permitted without license from IHS
Not for Resale
Full document details: ISO IEC 14161-241-2005

ing Commands shall set this bit to 1; messages containing Responses shall set this bit to 0. This field is used in conjunction with the Poll Bit of the SR protocol.

5.2.3 BBW message payload format for SFC

The general structure of the BBW message payload when SFC is specified as the Flow Control Type is given in Table 11. It consists of the following fields: 4-byte SOF, 24-byte FC-Header, FC frame-payload, 4-byte CRC, and 4-byte EOF. The SOF and EOF byte encodings are defined in Annex A. The FC-Header, FC frame-payload, and the CRC are contents of standard Fibre Channel frame fields that arrive at the B_Port or the E_Port interface.

NOTE 3 The format also applies when the Flow Control Type is specified as SFC and the PAUSE field carries a zero value, that is when no flow control is desired.

Table 11 – BBW message payload structure for SFC

Field	Size (Bytes)
SOF	4
FC-Header	24
FC frame-payload (includes optional header)	Min: 0 Max: 2 112
CRC	4
EOF	4

5.2.4 BBW message payload format for SR

The general structure of the BBW message payload when SR is specified as the Flow Control Type is given in Table 12. It consists of a 4-byte SR_Header and the SR_BBW message payload. The SR_Header encodings specify the SR_BBW message Type. SR_Header format is described in 5.2.4.1.

Table 12 – BBW message payload structure for SR

Field	Field	Size (Bytes)
SR_BBW message	SR_Header	4
	SR_BBW message payload	Max: 2 148

The SR_BBW message payload format depends on the type of the SR_BBW message and is described in 5.2.4.4.1, 5.2.4.4.4, and 5.2.4.4.9.

5.2.4.1 SR_Header Formats

5.2.4.1.1 Field Formats

The SR_Header defines three types of field formats that are used to perform numbered information transfer (I-format), numbered supervisory functions (S-format), and unnumbered control functions (U-format). See Table 13. SR makes use of 9 different types of messages:

a) I-format (1): SR_I

b) S-format (3): SR_RR, SR_RNR, SR_REJ

Documents
Document Sharing Hub
Copyright International Organization for Standardization
Reproduced by IHS under license with ISO
No reproduction or networking permitted without license from IHS
Not for Resale
Full document details: ISO IEC 14161-241-2005

c) U-format (5): SR_SM, SR_DISC, SR_FRMR, SR_UA, SR_DM

Bits 0 and 1 of the SR_Header provide the encodings for the three field formats. Bits 2 and 3 provide the encodings for the different S-format messages and are shown in Table 14. Bits 2, 3, 5, 6, and 7 provide the encodings for the different U-format messages and are shown in Table 15.

Table 13 – SR_Header format

Format	31	30	29	28	27	26	25	24	23	22	21	20	19	18	17	16	15	14	13	12	11	10	9	8	7	6	5	4	3	2	1	0
I	N(R)															P	N(S)															0
S	N(R)															P / F	Reserved												S	S	0	1
U	Reserved																Reserved								M	M	M	P / F	M	M	1	1

N(S): Transmitter send sequence number; N(R): Transmitter receive sequence number
SS: Supervisory function bits defined in table below
MMMMM: Modifier function bits defined in table below
P/F: Poll/Final bit; P Poll bit (1 = Poll)

Table 14 – SS bits encoding

SS Bits		Supervisory message
3	2	
0	0	SR_RR
0	1	Reserved
1	0	SR_RNR
1	1	SR_SREJ

Table 15 – MMMMM bit encoding

MMMMM Bits					Unnumbered message
7	6	5	3	2	
1	1	0	0	0	SR_SM
0	1	0	0	0	SR_DISC
1	0	0	0	1	SR_FRMR
0	1	1	0	0	SR_UA
0	0	0	1	1	SR_DM

5.2.4.1.2 Information transfer I-format

The I-format is used to perform an information transfer. The functions of the N(S), N(R), and P fields are independent; i.e. each SR_I message has a N(S), a N(R), that may or may not acknowledge additional SR_I messages received by the BBWs, and a P-bit that may be set to a 0 or 1.

Documents
Document Sharing Hub
Copyright International Organization for Standardization
Reproduced by IHS under license with ISO
No reproduction or networking permitted without license from IHS
Not for Resale
Full document details: ISO IEC 14161-241-2005

5.2.4.1.3 Supervisory S-format

The S-format is used to perform data link supervisory control functions such as acknowledge SR_I messages, request retransmission of SR_I messages, and to request a temporary suspension of transmission of SR_I messages. The functions of the N(R) and P/F fields are independent; i.e. each supervisory message has a N(R) that may or may not acknowledge additional SR_I messages received by the BBW, and a P/F bit that may be set to a 0 or 1.

5.2.4.1.4 Unnumbered U-format

The U format is used to provide additional data link control functions. This format contains no sequence numbers, but does include a P/F bit that may be set to a 0 or a 1.

5.2.4.2 SR_BBW messages

A description of the 9 different SR_BBW messages appears in Table 16. Only the SR_I, SR_SREJ, and SR_FRMR messages carry a payload; all other messages carry a null payload.

Table 16 – SR_BBW messages

Purpose	Message	Command/ Response	Description
Information transfer	SR_I	Command	Carries encapsulated Class 2, 3, 4 or F frames as payload
Control (Supervisory messages)	SR_RR	Command or Response	Indicates Ready to Receive SR_I messages (negates busy condition) and acknowledges previous SR_I messages; carries no payload
	SR_RNR	Command or Response	Indicates Receiver Not Ready to accept more SR_I messages (busy condition) and acknowledges previous SR_I messages; carries no payload
	SR_SREJ	Command or Response	Indicates Selective Retransmission of errored SR_I messages; carries a payload
Control (Unnumbered messages)	SR_SM	Command	Mode setting command to set up link and resets all messages counters to 0; carries no payload
	SR_UA	Response	Unnumbered response to the SR_SM command and indicates an acceptance and information transfer phase; carries no payload
	SR_DM	Response	Unnumbered response to the SR_SM command and indicates a disconnected phase; carries no payload
	SR_FRMR	Response	Unnumbered response to the SR_SM command and indicates message reject for the SR_SM message; carries a payload
	SR_DISC	Command	Command indicates the sender is suspending operation and enters the disconnected mode after receiving a SR_UA response; carries no payload
* Command/Response indicated by the Address Bit in Byte 3 of the BBW_Header.			

The following describes the different format fields and other related aspects of the SR protocol.

Documents
Document Sharing Hub
Copyright International Organization for Standardization
Reproduced by IHS under license with ISO
No reproduction or networking permitted without license from IHS
Not for Resale
Full document details: ISO IEC 14161-241-2005

5.2.4.3 Format Field Parameters

5.2.4.3.1 Modulus of SR

Each SR_I message is sequentially numbered and may have the value 0 through modulus minus 1, where “modulus” is equal to 32 768 the modulus of the sequence numbers. The sequence numbers cycle through the entire range.

5.2.4.3.2 Send state variable V(S)

The send state variable V(S) denotes the sequence number of the next in-sequence SR_I message to be transmitted. V(S) may take on the values 0 through modulus minus 1. The value of V(S) is incremented by 1 with each successive SR_I message transmission, but cannot exceed the N(R) of the last received SR_I or supervisory message by more than the maximum number of outstanding SR_I messages *k*. The value of *k* is defined in 6.3.8.4, Maximum number of outstanding SR_I messages *k*.

5.2.4.3.3 Send Sequence Number N(S)

Only SR_I messages contain N(S), the send sequence number of the transmitted SR_I message. At the time that an in-sequence SR_I message is designated for transmission, the value of N(S) is set equal to the value of the send state variable V(S).

5.2.4.3.4 Receive State Variable V(R)

The receive state variable V(R) denotes the sequence number of the next in-sequence SR_I message expected to be received. V(R) may take on the values 0 through modulus minus 1. The value of V(R) is incremented by 1 by the receipt of an error-free, in-sequence SR_I message whose send sequence number N(S) equals the receive state variable V(R).

5.2.4.3.5 Receive Sequence Number N(R)

All SR_I messages and supervisory messages, except SR_SREJ messages with the F bit set to 0, shall contain N(R), the expected send sequence number of the next received SR_I message. At the time that a message of the above types is designated for transmission, the value of N(R) is set equal to the current value of the receive state variable V(R). N(R) indicates that the BBW transmitting the N(R) has received correctly all SR_I messages numbered up to and including N(R)-1.

5.2.4.3.6 Functions of the Poll/Final Bit (P/F)

All messages contain P/F, the Poll/Final bit. In command messages, the P/F bit is referred to as the P bit. in response messages it is referred to as the F bit.

The Poll bit set to 1 is used by the BBW to solicit (poll) a response from the remote BBW.

The Final Bit set to 1 is used by the BBW to indicate the response message transmitted by the remote BBW, as a result of the soliciting (poll) command.

The use of the P/F bit is described 6.3.3.

5.2.4.4 SR Commands and Responses

5.2.4.4.1 Information (SR_I) command

The function of the information (SR_I) command is to transfer across a data link a sequentially numbered message containing an information field.

The SR_I message command carries the mapped byte-encoded Class 2, 3, 4 or F frames. The following steps are involved in generating the SR_I message:

Documents
Document Sharing Hub

Copyright International Organization for Standardization
Reproduced by IHS under license with ISO
No reproduction or networking permitted without license from IHS
Not for Resale
Full document details: ISO IEC 14161-241-2005

a) Constructing the SR_I message payload by prefixing the proper 32-bit SOF delimiter to the incoming FC-Header, FC frame-payload, and the CRC, and appending the corresponding 32-bit EOF delimiter to the CRC.

NOTE 4 The original Fibre Channel frame CRC field remains and the sender does not have to send a valid CRC and the receiver does not have to validate the CRC

b) Constructing the 4-byte SR_Header and prefixing it to the SR_I message payload

Table 17 illustrates the format of the SR_I message information field (payload). The maximum size of the BBW message is 2 152 bytes corresponding to a maximum size FC frame-payload of 2 112 bytes. The FC frame payload uses the SOF and EOF codes defined in Annex A.

Table 17 – SR_I message format

Field	Description	Size (Bytes)
SR_Header		4
SR_I message payload	SOF	4
	FC-Header	24
	FC frame-payload (includes optional header)	Min: 0 Max: 2 112
	CRC	4
	EOF	4

NOTE 5 SR protocol generated control messages do not carry the SOF and the EOF fields nor the FC headers in the payload

5.2.4.4.2 Receive Ready (SR_RR) Command and Response

The Receive Ready (SR_RR) supervisory message is used by the BBW to:

a) indicate it is ready to receive a SR_I message; and

b) acknowledge previously received SR_I messages numbered up to and including N(R)-1.

A SR_RR message may be used to indicate the clearance of a busy condition that was reported by the earlier transmission of a SR_RNR message by the same device. in addition to indicating the BBW status, the SR_RR message with the P-bit set to 1 may be used to ask for the status of the remote BBW.

5.2.4.4.3 Receive Not Ready (SR_RNR) Command and Response

The Receive Not Ready (SR_RNR) supervisory message is used to indicate a busy condition; i.e. temporary inability to accept additional incoming SR_I messages. SR_I messages numbered up to and including N(R)-1 are acknowledged. SR_I message N(R) and any subsequent SR_I messages received, if any, are not acknowledged; the acceptance status of these SR_I messages shall be indicated in subsequent exchanges.

In addition to indicating the status, the SR_RNR command with the P-bit set to 1 may be used by a BBW to ask for the status of the remote BBW.

5.2.4.4.4 Selective Reject (SR_SREJ) Response

The SR_REJ supervisory message shall be used by a BBW to request retransmission of one or more (not necessarily contiguous) SR_I messages. The N(R) field shall contain the sequence number of the earliest SR_I message to be retransmitted and the information field (payload) shall contain, in as-

Documents
Document Sharing Hub
Copyright International Organization for Standardization
Reproduced by IHS under license with ISO
No reproduction or networking permitted without license from IHS
Not for Resale
Full document details: ISO IEC 14161-241-2005

cending order (32767 is higher than 32766 and 0 is higher than 32767 for modulo 32768), the sequence numbers of additional SR_I message(s), if any, in need of retransmission.

The payload field shall be encoded such that there is a 2-octet field for each standalone SR_I message in need of retransmission, and a 4-octet span list for each sequence of two or more contiguously numbered SR_I messages in need of retransmission, as depicted in Table 18. In the case of the standalone SR_I messages, their identity in the payload field consists of the appropriate N(R) value preceded by a 0 bit in the 2-octet field used. In the case of span lists, their identity in the payload field consists of the N(R) value of the first SR_I message in the span list preceded by a 1 bit in the 2-octet field used, followed by the N(R) value of the last message in the span list preceded by a 1 bit in the 2-octet field used.

Table 18 – SR_SREJ payload format

	Field	Size (Bytes)
<Bit 1> = 0	<Bits 2-16> = 1-N(R) of standalone SR_I message	2
<Bit 1> = 1	<Bits 2-16> = N(R) of first SR_I message in span list	2
<Bit 1> = 1	<Bits 2-16> = N(R) of last SR_I message in span list	2
<Bit 1> = 0	<Bits 2-16> = N(R) of standalone SR_I message	2
<Bit 1> = 1	<Bits 2-16> = N(R) of first SR_I message in span list	2
<Bit 1> = 1	<Bits 2-16> = N(R) of last SR_I message in span list	2
	...	

NOTE 6 The maximum size of the BBW message payload carrying the SR_SREJ message is 2 148 bytes corresponding to a maximum possible encoding of 1074 standalone SR_I messages or a maximum possible encoding of 537 span list sets.

If the P/F bit in a SREJ message is set to 1, then SR_I messages numbered up to N(R)-1 inclusive (N(R) being the value in the SR_Header field), are considered as acknowledged. If the P/F bit in a SREJ message is set to 0, then the N(R) in the SR_Header field of the SREJ message does not indicate acknowledgement of SR_I messages.

The procedures to be followed on receipt of Set Mode (SR_SM) command are specified in 6.3.5.7, Receiving a SR_SREJ response message.

5.2.4.4.5 Set Mode (SR_SM) Command

The SR_SM unnumbered command is used to initialize the BBW device.

No information field is permitted with the SR_SM command. The transmission of a SR_SM command indicates the clearance of a busy condition that was reported by the earlier transmission of a SR_RNR message by the same BBW device. The BBW device confirms the acceptance of the SR_SM command by the transmission, at the first opportunity, of a SR_UA response. Upon acceptance of this command, the BBW device send state variable V(S) and receive state variable V(R) are set to 0.

Previously transmitted SR_I messages that are unacknowledged when this message is actioned remain unacknowledged. It is the responsibility of a higher layer to recover from the possible loss of the contents of such SR_I messages.

5.2.4.4.6 Disconnect (SR_DISC) Command

The SR_DISC unnumbered command is used to terminate the link that had been previously set. It is used to inform the BBW receiving the SR_DISC command that the remote BBW is suspending operation. No information field is permitted with the SR_DISC command. Prior to actioning the SR_DISC command, the BBW receiving the SR_DISC command confirms the acceptance of the SR_DISC

Documents
Document Sharing Hub
Copyright International Organization for Standardization
Reproduced by IHS under license with ISO
No reproduction or networking permitted without license from IHS
Not for Resale
Full document details: ISO IEC 14161-241-2005