ISO/IEC 14543-4-302

Edition 1.0 2023-04

INTERNATIONAL STANDARD

colour inside

Information technology – Home electronic system (HES) architecture – Part 4-302: Application protocols for electrical storage systems and controllers

ISO/IEC 14543-4-302:2023-04(en)

Documents
Document Sharing Hub

Full document details: ISO IEC 14543-4-302-2023

THIS PUBLICATION IS COPYRIGHT PROTECTED
Copyright © 2023 ISO/IEC, Geneva, Switzerland

All rights reserved. Unless otherwise specified, no part of this publication may be reproduced or utilized in any form or by any means, electronic or mechanical, including photocopying and microfilm, without permission in writing from either IEC or IEC's member National Committee in the country of the requester. If you have any questions about ISO/IEC copyright or have an enquiry about obtaining additional rights to this publication, please contact the address below or your local IEC member National Committee for further information.

IEC Secretariat
3, rue de Varembé
CH-1211 Geneva 20
Switzerland

Tel.: +41 22 919 02 11
info@iec.ch
www.iec.ch

About the IEC
The International Electrotechnical Commission (IEC) is the leading global organization that prepares and publishes International Standards for all electrical, electronic and related technologies.

About IEC publications
The technical content of IEC publications is kept under constant review by the IEC. Please make sure that you have the latest edition, a corrigendum or an amendment might have been published.

IEC publications search - webstore.iec.ch/advsearchform
The advanced search enables to find IEC publications by a variety of criteria (reference number, text, technical committee, …). It also gives information on projects, replaced and withdrawn publications.

IEC Just Published - webstore.iec.ch/justpublished
Stay up to date on all new IEC publications. Just Published details all new publications released. Available online and once a month by email.

IEC Customer Service Centre - webstore.iec.ch/csc
If you wish to give us your feedback on this publication or need further assistance, please contact the Customer Service Centre: sales@iec.ch.

IEC Products & Services Portal - products.iec.ch
Discover our powerful search engine and read freely all the publications previews. With a subscription you will always have access to up to date content tailored to your needs.

Electropedia - www.electropedia.org
The world's leading online dictionary on electrotechnology, containing more than 22 300 terminological entries in English and French, with equivalent terms in 19 additional languages. Also known as the International Electrotechnical Vocabulary (IEV) online.

Documents
Document Sharing Hub

Full document details: ISO IEC 14543-4-302-2023

ISO/IEC 14543-4-302

Edition 1.0 2023-04

INTERNATIONAL STANDARD

colour inside

Information technology – Home electronic system (HES) architecture – Part 4-302: Application protocols for electrical storage systems and controllers

INTERNATIONAL
ELECTROTECHNICAL
COMMISSION

ICS 35.240.67

ISBN 978-2-8322-6793-6

Warning! Make sure that you obtained this publication from an authorized distributor.

Documents
Document Sharing Hub

Full document details: ISO IEC 14543-4-302-2023

CONTENTS

FOREWORD 5
INTRODUCTION 7
1 Scope 8
2 Normative references 8
3 Terms, definitions and abbreviated terms 8
3.1 Terms and definitions 8
3.2 Abbreviations 9
4 Conformance 10
5 Configuration 10
5.1 General 10
5.2 Configuration and components 10
5.3 Connection configuration 11
6 Application layer 12
6.1 General 12
6.2 NECD objects 12
6.3 NECD services 12
6.4 Object-specific NECD properties 12
6.5 Application operation 14
6.5.1 General 14
6.5.2 Continuous requests 14
6.5.3 Response wait time value for controllers 15
6.5.4 Resending a frame 15
6.5.5 Processing object property counter 15
6.5.6 Property values of write requests 15
7 Normal operation 16
7.1 General 16
7.2 Start-up operation 18
7.2.1 General 18
7.2.2 Start-up processing of NECD nodes 18
7.2.3 Search processing 18
7.2.4 Obtaining NECD attribute information 18
7.2.5 Obtaining electrical storage system attribute information 19
7.3 Occasional operation 22
7.3.1 General 22
7.3.2 Obtaining electrical storage system status 22
7.3.3 Setting and updating "AC charge amount target value" property (or "AC discharge amount target value" property) 25
7.3.4 Setting and updating "Charging electric power setting" property (or "Discharging electric power setting" property) (optional) 28
7.3.5 Setting "Charging method" property (or "Discharging method" property) (optional) 31
7.3.6 Setting "Operation mode setting" property 34
7.3.7 Terminating charging (or discharging) operation of the storage battery based on "AC charging amount target value" property (or "AC discharging amount target value" property) 37
7.4 Fault status notification 41
8 Remote control 42

AVA Documents
Document Sharing Hub
Full document details: ISO IEC 14543-4-302-2023

8.1 General ... 42
8.2 Setting and updating "AC charge amount target value" property (or "AC discharge amount target value" property) on remote control ... 42
8.3 Setting "Operation mode setting" property when remotely controlling ... 44
9 Considerations on controllers ... 46
9.1 General ... 46
9.2 Restrictions by electrical storage system implementations ... 47
Annex A (informative) Terms and NECD protocol frame format on ISO/IEC 14543-4-3 and IEC 62394 ... 48
A.1 Terms correspondence between ISO/IEC 14543-4-3 and IEC 62394 ... 48
A.2 NECD protocol frame format ... 48
Annex B (informative) Relationship between ISO/IEC 14543-4 series and the HES gateway, based on ISO/IEC 15045 series and ISO/IEC 18012 series ... 50
Bibliography ... 51

Figure 1 – Relationship between IEC 62394, ISO/IEC 14543-4-3 and ISO/IEC 14543-4-302 ... 7
Figure 2 – Example of electrical storage system configuration and components ... 10
Figure 3 – Connection configurations ... 11
Figure 4 – Assumed network stack ... 11
Figure 5 – Summary of normal operation sequences ... 17
Figure 6 – Sequence for obtaining NECD attribute information ... 19
Figure 7 – Sequence of obtaining electrical storage system attribute information ... 21
Figure 8 – Sequence to obtain status of electrical storage systems ... 25
Figure 9 – Sequence for setting "AC charge amount target value" property (or "AC discharge amount target value" property) ... 28
Figure 10 – Sequence for setting "Charging electric power setting" property (or "Discharging electric power setting" property) ... 31
Figure 11 – Sequence for setting "Charging method" property (or "Discharging method" property) ... 33
Figure 12 – Sequence for setting "Charging method" property (or "Discharging method" property) when no response is received from the storage battery ... 34
Figure 13 – Sequence for setting "Operation mode setting" property ... 36
Figure 14 – Sequence for setting "Operation mode setting" property when no response is received from the storage battery ... 37
Figure 15 – Sequence of terminating charging (discharging) operation based on "AC charge amount target value" property ("AC discharge amount target value" property) ... 40
Figure 16 – Sequence of terminating charge (discharge) operation based on "AC charge amount target value" property ("AC discharge amount target value" property) when "Operation mode setting" property is changed ... 41
Figure 17 – Remote control ... 42
Figure 18 – Example of setting sequence for "AC charge amount target value" property ("AC discharge amount target value" property) when "Remote control setting" property is used ... 44
Figure 19 – Example of setting sequence for "Operation mode setting" property when "Remote control setting" property is used ... 45
Figure 20 – Example of setting sequence for "Operation mode setting" property when "Remote control setting" property is used, in case that no response is made by electrical storage system ... 46

AVA Documents
Document Sharing Hub
Full document details: ISO IEC 14543-4-302-2023

Figure A.1 – NECD protocol frame format 49

Table 1 – NECD objects 12
Table 2 – NECD services 12
Table 3 – NECD properties of device object (super class) 13
Table 4 – NECD properties of device object 13
Table 5 – Response wait time values for controllers 15
Table 6 – Re-set wait time for the AC charge (or discharge) amount target value 27
Table 7 – Wait time for re-setting charging and discharging electric power setting 30
Table 8 – Wait time for charging and discharging method for re-setting 32
Table 9 – Wait time for re-setting operation mode 35
Table A.1 – Terms correspondence table between ISO/IEC 14543-4-3 and IEC 62394 48
Table B.1 – Partial list of the translation between ISO/IEC 14543-4-302 and HES gateway lexicon (ISO/IEC 18012-3) 50

Documents
Document Sharing Hub

Full document details: ISO IEC 14543-4-302-2023

© ISO/IEC 2023

INFORMATION TECHNOLOGY – HOME ELECTRONIC SYSTEM (HES) ARCHITECTURE –

Part 4-302: Application protocols for electrical storage systems and controllers

FOREWORD

1) ISO (the International Organization for Standardization) and IEC (the International Electrotechnical Commission) form the specialized system for worldwide standardization. National bodies that are members of ISO or IEC participate in the development of International Standards through technical committees established by the respective organization to deal with particular fields of technical activity. ISO and IEC technical committees collaborate in fields of mutual interest. Other international organizations, governmental and non-governmental, in liaison with ISO and IEC, also take part in the work.
2) The formal decisions or agreements of IEC and ISO on technical matters express, as nearly as possible, an international consensus of opinion on the relevant subjects since each technical committee has representation from all interested IEC and ISO National bodies.
3) IEC and ISO documents have the form of recommendations for international use and are accepted by IEC and ISO National bodies in that sense. While all reasonable efforts are made to ensure that the technical content of IEC and ISO documents is accurate, IEC and ISO cannot be held responsible for the way in which they are used or for any misinterpretation by any end user.
4) In order to promote international uniformity, IEC and ISO National bodies undertake to apply IEC and ISO documents transparently to the maximum extent possible in their national and regional publications. Any divergence between any IEC and ISO document and the corresponding national or regional publication shall be clearly indicated in the latter.
5) IEC and ISO do not provide any attestation of conformity. Independent certification bodies provide conformity assessment services and, in some areas, access to IEC and ISO marks of conformity. IEC and ISO are not responsible for any services carried out by independent certification bodies.
6) All users should ensure that they have the latest edition of this document.
7) No liability shall attach to IEC and ISO or their directors, employees, servants or agents including individual experts and members of its technical committees and IEC and ISO National bodies for any personal injury, property damage or other damage of any nature whatsoever, whether direct or indirect, or for costs (including legal fees) and expenses arising out of the publication, use of, or reliance upon, this ISO/IEC document or any other IEC and ISO documents.
8) Attention is drawn to the Normative references cited in this document. Use of the referenced publications is indispensable for the correct application of this document.
9) Attention is drawn to the possibility that some of the elements of this ISO/IEC document may be the subject of patent rights. IEC and ISO shall not be held responsible for identifying any or all such patent rights.

ISO/IEC 14543-4-302 has been prepared by subcommittee 25: Interconnection of information technology equipment, of ISO/IEC joint technical committee 1: Information technology. It is an International Standard.

The list of all currently available parts of the ISO/IEC 14543 series, under the general title *Information technology – Home Electronic System (HES) architecture*, can be found on the IEC website and ISO website.

The text of this International Standard is based on the following documents:

Draft	Report on voting
JTC1-SC25/3100/CDV	JTC1-SC25/3130/RVC

Full information on the voting for its approval can be found in the report on voting indicated in the above table.

Documents
Document Sharing Hub

Full document details: ISO IEC 14543-4-302-2023

The language used for the development of this International Standard is English.

This document was drafted in accordance with ISO/IEC Directives, Part 2, and developed in accordance with ISO/IEC Directives, Part 1, available at www.iec.ch/members_experts/refdocs and www.iso.org/directives.

IMPORTANT – The "colour inside" logo on the cover page of this document indicates that it contains colours which are considered to be useful for the correct understanding of its contents. Users should therefore print this document using a colour printer.

Documents
Document Sharing Hub

Full document details: ISO IEC 14543-4-302-2023

INTRODUCTION

This part of ISO/IEC 14543 specifies the detailed procedures and behaviours of both electrical storage systems and controllers at the application level of communications based on ISO/IEC 14543-4-3. This document specifies the message structure, sequences and protocol of the application layer for networked enhanced control devices used in the Home Electronic System (HES). Some services are targeted for communications between devices. Other services are exclusively reserved for management purposes. Some services can be used for both management and run-time communications. This document is applicable for energy management services involving storage batteries, inverters, chargers and related devices.

Figure 1 shows the relationship among IEC 62394, ISO/IEC 14543-4-3 and ISO/IEC 14543-4-302. ISO/IEC 14543-4-3 specifies the message structure, sequences and protocol for general-purpose communications used in network enhanced control devices of the Home Electronic System (HES) Class 1. ISO/IEC 14543-4-3 provides the common interfaces for the use-level process and the services such as energy management, remote maintenance, and other services for easily building a system consisting of multi-vendor devices and equipment. IEC 62394 specifies the detailed lists of control commands on NECD objects (see ISO/IEC 14543-4-3). Annex A shows terms and NECD protocol frame format on ISO/IEC 14543-4-3 and IEC 62394.

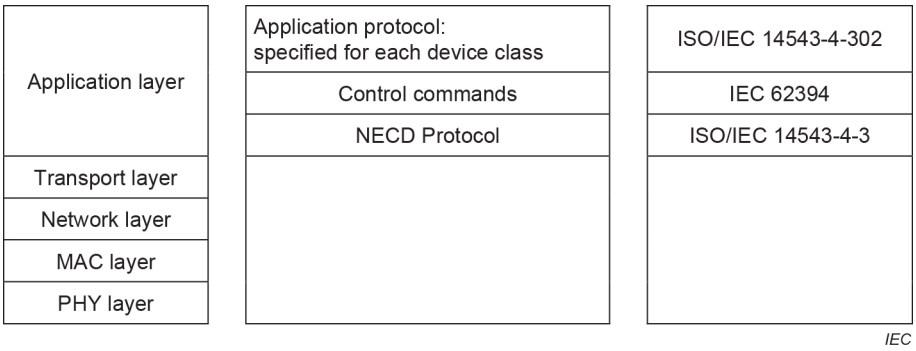

Figure 1 – Relationship between IEC 62394, ISO/IEC 14543-4-3 and ISO/IEC 14543-4-302

ISO/IEC 14543-4-3 is a general-purpose communications specification that applies to a variety of devices. ISO/IEC 14543-4-3 is the basis for this document, which specifies detailed procedures and behaviours for pre-packaged system solutions that include storage batteries, inverters, chargers and related devices. The procedures and behaviours specified in this document can be used for energy flow inside a home or energy flow between the grid and a home.

In order to enhance interoperability, it is important to specify how to implement ISO/IEC 14543-4-3 for each device and controller at the application level such as command sequences, timeout requirements, required combinations of acceptable commands, etc..

Documents
Document Sharing Hub
Full document details: ISO IEC 14543-4-302-2023

© ISO/IEC 2023

INFORMATION TECHNOLOGY – HOME ELECTRONIC SYSTEM (HES) ARCHITECTURE –

Part 4-302: Application protocols for electrical storage systems and controllers

1 Scope

This part of ISO/IEC 14543 specifies an application-layer protocol important for ensuring interoperability among the products of various manufacturers regarding communications between electrical storage systems and controllers. It uses the network enhanced communications device (NECD) protocol specified in ISO/IEC 14543-4-3. This protocol is based on UDP using IPv4 or IPv6 (TCP is optional).

2 Normative references

The following documents are referred to in the text in such a way that some or all of their content constitutes requirements of this document. For dated references, only the edition cited applies. For undated references, the latest edition of the referenced document (including any amendments) applies.

ISO/IEC 14543-4-3, *Information technology – Home Electronic System (HES) architecture – Part 4-3: Application layer interface to lower communications layers for network enhanced control devices of HES Class 1*

IEC 62394, *Service diagnostic interface for consumer electronics products and networks – Implementation for ECHONET*

3 Terms, definitions and abbreviated terms

3.1 Terms and definitions

For the purposes of this document the following terms and definitions apply.

ISO and IEC maintain terminology databases for use in standardization at the following addresses:

- IEC Electropedia: available at https://www.electropedia.org/
- ISO Online browsing platform: available at https://www.iso.org/obp

3.1.1
battery management unit
BMU
device that manages packs and cells

Note 1 to entry: Examples of management functions: monitoring state, calculating, checking environment, balancing, etc.

3.1.2
cell
device that can be charged and discharged repeatedly

Note 1 to entry: The typical residential device is a lithium ion battery.

Documents
Document Sharing Hub
Full document details: ISO IEC 14543-4-302-2023

3.1.3
device object
network enhanced control device (NECD) object other than a node profile object

Note 1 to entry: In this document, "device object" refers to storage battery object only.

3.1.4
electrical storage system
combination of devices that include single or multiple power conditioning systems (PCSs), battery management units (BMUs), and packs to support primarily residential applications, including a communications interface

3.1.5
NECD protocol
protocol used in network enhanced control device (NECD) communications

3.1.6
node profile
description of objects implemented in each node

3.1.7
pack
combination of cells

3.1.8
power conditioning system
PCS
device that charges and discharges cells, and translates DC voltage of cells to AC voltage (e.g. inverter), and AC voltage to DC voltage (e.g. charger) of cells

3.1.9
remote control
control from outside the home

3.1.10
response wait time
time between a controller request to and the response from an electrical storage system

3.1.11
super class
properties that are inherited and implemented in all device objects

3.2 Abbreviations

BMU	battery management unit
DNOJ	destination NECD object
IP	internet protocol
NDATA	NECD data
NDT	NECD property value data
NECD	network enhanced control device
NHD	NECD header
NPC	NECD property code
NSV	NECD service
OPC	processing object property counter
PCS	power conditioning system

Documents
Document Sharing Hub
Full document details: ISO IEC 14543-4-302-2023

PDC	property data counter
SNOJ	source NECD object
TID	transaction ID
UDP	user datagram protocol

4 Conformance

Electrical storage systems and controllers of HES Class 1 that claim conformance to this document shall:

– send, receive and process sequences and procedures as specified in Clause 7.
– provide application services and properties specified in 6.2, 6.3 and 6.4 as needed by electrical storage systems and controllers for which the application is intended.

5 Configuration

5.1 General

Clause 5 specifies the configuration and components of an electrical storage system, and connection configurations between an electrical storage system and a controller.

5.2 Configuration and components

Figure 2 shows an example of an electrical storage system configuration and components. An electrical storage system basically includes the device or function of a power conditioning system (PCS), a battery management unit (BMU), and one or more packs. The electrical storage system includes the ISO/IEC 14543-4-302 data communications function on the PCS or BMU in many cases.

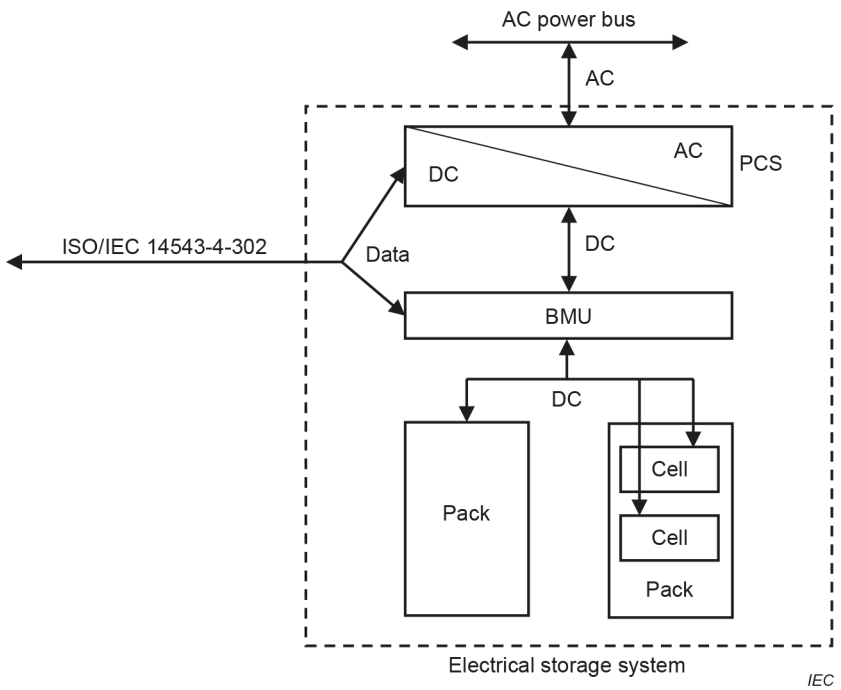

Figure 2 – Example of electrical storage system configuration and components

Documents
Document Sharing Hub
Full document details: ISO IEC 14543-4-302-2023

5.3 Connection configuration

This specification is necessary for ensuring interoperability between the products of different manufacturers in connection with application communications between electrical storage systems and controllers, using the NECD protocol as an application protocol via UDP (TCP)/IPv6 communications.

Figure 3 shows the configurations assumed under this specification.

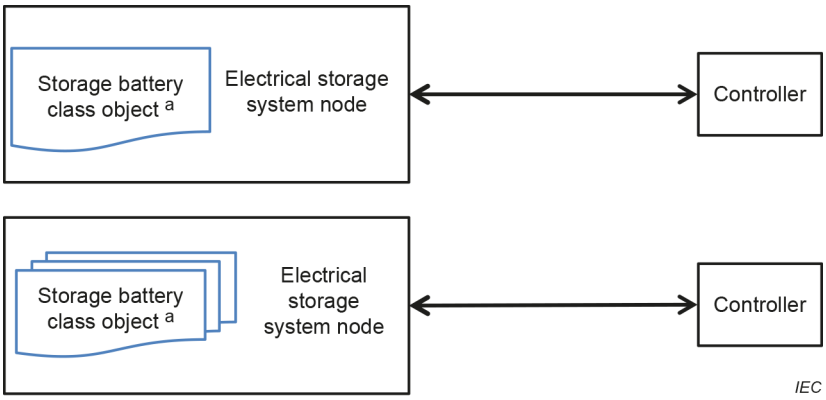

[a] "Storage battery class object" is a device object specified in IEC 62394.

Figure 3 – Connection configurations

The upper illustration in Figure 3 shows the case where a single device object is installed in a single node. The lower illustration shows the case where multiple device objects are installed in a single node. The latter case occurs when multiple battery units are attached to a single communications unit. In this case, there are multiple storage battery class objects in a single electrical storage system node (i.e. at a single IP address). Controllers shall support nodes that configure multiple device objects in a single node.

Controllers shall be capable of handling multiple nodes and objects. The maximum number of nodes and objects to be handled is implementation-dependent on the controllers. When multiple controllers are connected to a single system, some electrical storage systems cannot accept a request from a controller for a certain period of time after the electrical storage system received a request from another controller.

Figure 4 shows the assumed network stack for operating the NECD protocol in this document. NECD protocol operation is assumed as an application protocol on UDP(TCP)/IPv6. Note that TCP installation is optional. As a rule, the stack uses IPv6; however, IPv4 is allowed depending on the market trends for migration from IPv4 to IPv6.

Application layer		ISO/IEC 14543-4-302 IEC 62394 ISO/IEC 14543-4-3
Transport layer		UDP(TCP)
Network layer		IPv6 or IPv4
(Adaptation layer)		(6LoWPAN[a])
MAC layer		(No specific MAC layer assumed)
PHY layer		(No specific PHY layer assumed)

IEC

[a] Depends on transmission media using IPv6.

Figure 4 – Assumed network stack

Documents
Document Sharing Hub
Full document details: ISO IEC 14543-4-302-2023

Connection processing specific to each lower layer communications medium that is necessary in advance of the start of NECD communications is out of the scope of this document. In this document, application communications using the NECD protocol are specified on the assumption that connection processing specific to those communications media is complete.

6 Application layer

6.1 General

The NECD protocol shall be used at the application layer. All nodes that conform to this document shall support all mandatory functions specified in ISO/IEC 14543-4-3.

6.2 NECD objects

Electrical storage systems and controllers shall have the NECD objects shown in Table 1.

Table 1 – NECD objects

NECD object	Class group code	Class code	Class name	Instance code
Electrical storage system	0x02	0x7D	Storage battery	0x01 to 0x7F
	0x0E	0xF0	Node profile	0x01
Controller	0x05	0xFF	Controller	0x01 to 0x7F
	0x0E	0xF0	Node profile	0x01

NOTE Instance code 0x00 is designated to specify all instances of the same class in a node.

6.3 NECD services

Electrical storage systems and controllers shall support the NECD services shown in Table 2.

Table 2 – NECD services

NSV code	NECD service content	Symbol
0x51	Property value write "response-not-possible" response	SetC_SNA
0x52	Property value read "response-not-possible" response	Get_SNA
0x61	Property value write request (response required)	SetC
0x62	Property value read request	Get
0x71	Property value write response	Set_Res
0x72	Property value read response	Get_Res
0x73	Property value notification	INF

NOTE NSV codes which are specified in ISO/IEC 14543-4-3 but are not shown in Table 2 (0x60, 0x63, 0x6E, 0x74, 0x7A, 0x7E, 0x50, 0x53, and 0x5E) are not subject to the certification tests based on this document.

6.4 Object-specific NECD properties

Electrical storage systems shall install the NECD properties of a device object shown in Table 3 and Table 4. NECD properties of a node profile object shall support at least the mandatory properties.

Documents
Document Sharing Hub
Full document details: ISO IEC 14543-4-302-2023

Controllers shall send requests to the device object properties shown in Table 3 and Table 4. If a controller can control electrical storage systems via a public network, the remote control operations that set properties of storage batteries shall include SetC [0x61] to "Remote control setting" property [0x93].

Table 3 – NECD properties of device object (super class)

Property name	NPC	Units	Access rule		Announcement at status change	Remarks
			Get	Set		
Installation location	0x81	—	M	M	M	
Standard version information	0x82	—	M	—	—	
Fault status	0x88	—	M	—	M	
Manufacturer code	0x8A	—	M	—	—	
Remote control setting	0x93	—	O	O	—	
Status change announcement property map	0x9D	—	M	—	—	
Set property map	0x9E	—	M	—	—	
Get property map	0x9F	—	M	—	—	
M: mandatory, O: optional, —: not supported						

Table 4 – NECD properties of device object

Property name	NPC	Units	Access rule		Announcement at status change	Remarks
			Get	Set		
Operation status	0x80	—	M	—	M	
Identification number	0x83	—	M	—	—	
Current time setting	0x97	—	M	—	—	
Current date setting	0x98	—	M	—	—	
AC effective capacity (charging)	0xA0	Wh	M	—	—	AC
AC effective capacity (discharging)	0xA1	Wh	M	—	—	AC
AC chargeable capacity	0xA2	Wh	M	—	—	AC
AC dischargeable capacity	0xA3	Wh	M	—	—	AC
AC chargeable electric energy	0xA4	Wh	M	—	—	AC
AC dischargeable electric energy	0xA5	Wh	M	—	—	AC
AC cumulative charging electric energy	0xA8	0,001 kWh	M	—	—	AC
AC cumulative discharging electric energy	0xA9	0,001 kWh	M	—	—	AC
AC charge amount target value	0xAA	Wh	M	M	M	AC
AC discharge amount target value	0xAB	Wh	M	M	M	AC
Charging method	0xC1	—	M	O	M	
Discharging method	0xC2	—	M	O	M	
Minimum and maximum charging electric power	0xC8	W	M	—	—	AC
Minimum and maximum discharging electric power	0xC9	W	M	—	—	AC
Working operation status	0xCF	—	M	—	M	a, b

AVA Documents
Document Sharing Hub
Full document details: ISO IEC 14543-4-302-2023

Property name	NPC	Units	Access rule		Announcement at status change	Remarks
			Get	Set		
Operation mode setting	0xDA	—	M	M	M	a, b
System-interconnected type	0xDB	—	M	—	—	
Remaining stored electricity 1	0xE2	Wh	M	—	—	DC [c]
Remaining stored electricity 2	0xE3	0,1 Ah	M	—	—	DC [c]
Remaining stored electricity 3	0xE4	%	M	—	—	[c]
Battery type	0xE6	—	M	—	—	
Rated electric energy	0xD0	Wh	O	—	—	DC
Rated capacity	0xD1	0,1 Ah	O	—	—	DC
Rated voltage	0xD2	V	O	—	—	DC
Instantaneous charging and discharging electric power	0xD3	W	O	—	—	AC
Charging electric power setting	0xEB	W	O	O	—	AC
Discharging electric power setting	0xEC	W	O	O	—	AC
M: mandatory, O: optional, —: not supported						

[a] Property values of "Charging", "Discharging", and "Standby" are mandatory.

[b] When "Operation mode setting" property [0xDA] is set as "Auto", the property value of "Working operation status" property [0xCF] should be set as "Charging", "Discharging", or "Standby", depending on the actual status of the storage battery.

[c] One of them is mandatory.

The details of the properties shown in Table 3 and Table 4 are specified in IEC 62394 "Storage battery class specifications". If a discrepancy between IEC 62394 and this document exists, the description in this document applies.

Electrical storage systems may not operate as set on "Operation mode setting" property [0xDA] depending on the system status of the electrical storage system. The actual status of the electrical storage system (charging or discharging, etc.) should be set on "Working operation status" property [0xCF] and the value of "Operation mode setting" property [0xDA] should not be changed in this case.

Fault status of electrical storage systems shall be shown when using the standardized "Fault status" property [0x88]. Electrical storage systems may describe details of the fault status by using other fault NECD properties ("Manufacturer's fault code" property [0x86] and "Fault description" property [0x89]) as specified in IEC 62394.

6.5 Application operation

6.5.1 General

Subclauses 6.5.2 to 6.5.6 specify the operations on electrical storage systems and controllers at the application level.

6.5.2 Continuous requests

A request from a controller and the corresponding response from an electrical storage system is a basic unit of communications, i.e. an electrical storage system returns a single response to a single request. Controllers that issue continuous requests to an electrical storage system shall be designed with a response wait time defined in Table 5. When receiving a response, the time is reset and the controller can send a new request.

Documents
Document Sharing Hub
Full document details: ISO IEC 14543-4-302-2023

If a controller resends or continuously sends requests in an interval shorter than a response wait time value specified in Table 5, electrical storage systems may not accept the requests, may not renew the values to respond, or may not be able to renew the values correctly. Note that the "continuous requests" means continued requests to the same instance in the same electrical storage system node.

6.5.3 Response wait time value for controllers

The values of response wait times, which count the time from a controller's request until the response from the targeted electrical storage system, are specified in Table 5.

Table 5 – Response wait time values for controllers

Parameter name	Value	Remarks
Response wait time 1	At least 5 [s]	For SetC
Response wait time 2	At least 20 [s]	For Get

Note that electrical storage systems shall respond within the time specified in Table 5, in case the received request's OPC is 1 or in case the electrical storage system processes operations specified in Clause 7 only. In case the request's DNOJ instance code is all-instance designation code [0x00], the targeted electrical storage system shall return the first response frame within the time specified in Table 5.

6.5.4 Resending a frame

If a controller sends a request to an electrical storage system and does not receive the response from the electrical storage system within the response wait time value specified in Table 5, the frame shall not be retransmitted in a frame of the same TID. In this case controllers may resend a message with a different TID.

6.5.5 Processing object property counter

Electrical storage systems shall be capable of supporting OPC value of 11 or more. Electrical storage systems shall process operations with an OPC value of 11 as specified in Clause 7 only. Electrical storage systems may not process operations with any combination of NPCs up to 11.

The order of NPCs of the response to a request with multiple NPCs shall be the same as the request. Controllers shall support receiving INF [0x73] with multiple NPCs.

6.5.6 Property values of write requests

When controllers issue a SetC [0x61] request, a value outside the range of properties required by IEC 62394 shall not be set.

Electrical storage systems shall send SetC_SNA [0x51] when receiving the request SetC [0x61] from the controllers to properties indicating functions, if the setting values are those not installed on the actual devices. When the setting values are installed on the actual devices, Set_Res [0x71] shall be basically sent as an acceptance response. However, SetC_SNA [0x51] may be sent if there is no response to a set value during specific operations such as autonomous operation or maintenance mode.

Electrical storage systems should send Set_Res [0x71] as an acceptance response, after setting a value rounded to the highest or lowest value of the value range installed on the actual devices as a property value, when receiving SetC [0x61] request from controllers to properties indicating a continued value, if the set value is within the defined range of IEC 62394. When the setting values are within the range of values installed on the actual devices, Set_Res [0x71] shall be sent as an acceptance response.

AVA Documents
Document Sharing Hub
Full document details: ISO IEC 14543-4-302-2023