ISO/IEC 14776-263

Edition 1.0 2018-10

INTERNATIONAL STANDARD

colour inside

Information technology – Small Computer System Interface (SCSI) – Part 263: SAS Protocol Layer – 3 (SPL-3)

ISO/IEC 14776-263:2018-10(en)

Documents
Document Sharing Hub

Full document details: ISO IEC 14776-263-2018

THIS PUBLICATION IS COPYRIGHT PROTECTED
Copyright © 2018 ISO/IEC, Geneva, Switzerland

All rights reserved. Unless otherwise specified, no part of this publication may be reproduced or utilized in any form or by any means, electronic or mechanical, including photocopying and microfilm, without permission in writing from either IEC or IEC's member National Committee in the country of the requester. If you have any questions about ISO/IEC copyright or have an enquiry about obtaining additional rights to this publication, please contact the address below or your local IEC member National Committee for further information.

IEC Central Office
3, rue de Varembé
CH-1211 Geneva 20
Switzerland

Tel.: +41 22 919 02 11
info@iec.ch
www.iec.ch

About the IEC
The International Electrotechnical Commission (IEC) is the leading global organization that prepares and publishes International Standards for all electrical, electronic and related technologies.

About IEC publications
The technical content of IEC publications is kept under constant review by the IEC. Please make sure that you have the latest edition, a corrigenda or an amendment might have been published.

IEC Catalogue - webstore.iec.ch/catalogue
The stand-alone application for consulting the entire bibliographical information on IEC International Standards, Technical Specifications, Technical Reports and other documents. Available for PC, Mac OS, Android Tablets and iPad.

IEC publications search - webstore.iec.ch/advsearchform
The advanced search enables to find IEC publications by a variety of criteria (reference number, text, technical committee,…). It also gives information on projects, replaced and withdrawn publications.

IEC Just Published - webstore.iec.ch/justpublished
Stay up to date on all new IEC publications. Just Published details all new publications released. Available online and also once a month by email.

Electropedia - www.electropedia.org
The world's leading online dictionary of electronic and electrical terms containing 21 000 terms and definitions in English and French, with equivalent terms in 16 additional languages. Also known as the International Electrotechnical Vocabulary (IEV) online.

IEC Glossary - std.iec.ch/glossary
67 000 electrotechnical terminology entries in English and French extracted from the Terms and Definitions clause of IEC publications issued since 2002. Some entries have been collected from earlier publications of IEC TC 37, 77, 86 and CISPR.

IEC Customer Service Centre - webstore.iec.ch/csc
If you wish to give us your feedback on this publication or need further assistance, please contact the Customer Service Centre: sales@iec.ch.

Documents
Document Sharing Hub

Full document details: ISO IEC 14776-263-2018

ISO/IEC 14776-263

Edition 1.0 2018-10

INTERNATIONAL STANDARD

colour inside

Information technology – Small Computer System Interface (SCSI) – Part 263: SAS Protocol Layer – 3 (SPL-3)

INTERNATIONAL
ELECTROTECHNICAL
COMMISSION

ICS 35.200

ISBN 978-2-8322-6190-3

Warning! Make sure that you obtained this publication from an authorized distributor.

Documents
Document Sharing Hub

Full document details: ISO IEC 14776-263-2018

ISO/IEC 14776-263:2018

Information technology - Small Computer System Interface (SCSI) - Part 263:SAS Protocol Layer - 3 (SPL-3)

Reference
ISO/IEC 14775-263

Documents
Document Sharing Hub

Full document details: ISO IEC 14776-263-2018

FOREWORD ... 39
INTRODUCTION ... 41
SCSI standards family ... 42

1 Scope ... 44

2 Normative references ... 45

3 Terms, definitions, symbols, abbreviations, keywords, and conventions ... 46
3.1 Terms and definitions ... 46
3.2 Symbols and abbreviations ... 75
3.2.1 Abbreviations ... 75
3.2.2 Units ... 77
3.2.3 Symbols ... 77
3.2.4 Mathematical operators ... 78
3.3 Keywords ... 78
3.4 Editorial conventions ... 79
3.5 Numeric and character conventions ... 80
3.5.1 Numeric conventions ... 80
3.5.2 Units of measure ... 81
3.5.3 Byte encoded character strings conventions ... 82
3.6 UML notation conventions ... 82
3.6.1 Notation conventions overview ... 82
3.6.2 Constraint and note conventions ... 82
3.6.3 Class diagram conventions ... 83
3.6.4 Object diagram conventions ... 88
3.7 State machine conventions ... 90
3.7.1 State machine conventions overview ... 90
3.7.2 Transitions ... 91
3.7.3 Messages, requests, indications, confirmations, responses, and event notifications ... 91
3.7.4 State machine counters, timers, and variables ... 91
3.7.5 State machine arguments ... 92
3.8 Bit and byte ordering ... 92
3.9 Notation for procedures and functions ... 93

4 General ... 94
4.1 Architecture ... 94
4.1.1 Architecture overview ... 94
4.1.2 Physical links and phys ... 96
4.1.3 Logical links ... 100
4.1.4 Narrow ports and wide ports ... 100
4.1.5 Application clients and device servers ... 104
4.1.6 SAS devices ... 104
4.1.7 Expander devices ... 105
4.1.8 Service delivery subsystem ... 106
4.1.9 Domains ... 107
4.1.10 Expander device topologies ... 110
4.1.10.1 Expander device topology overview ... 110
4.1.10.2 Expander device topologies ... 111
4.1.11 Pathways ... 113
4.1.12 Connections ... 113
4.1.13 Persistent connections ... 115
4.1.13.1 Persistent connection operation ... 115
4.1.13.2 Persistent connection support ... 116
4.1.14 Advancing credit ... 116
4.1.15 Broadcasts ... 116
4.2 Names and identifiers ... 118

Documents
Document Sharing Hub

Full document details: ISO IEC 14776-263-2018

4.2.1 Names and identifiers overview ... 118
4.2.2 NAA IEEE Registered format identifier ... 120
4.2.3 NAA Locally Assigned format identifier ... 121
4.2.4 SAS address ... 121
4.2.5 Hashed SAS addresses ... 121
4.2.6 Device names and expander device SAS addresses ... 122
4.2.7 Device names for SATA devices with world wide names ... 123
4.2.8 Port names ... 123
4.2.9 Port identifiers and SAS port SAS addresses ... 123
4.2.10 Phy identifiers ... 124
4.3 State machines ... 125
4.3.1 State machine overview ... 125
4.3.2 Transmit data path ... 126
4.3.3 Receive data path ... 131
4.3.4 State machines and SAS Device, SAS Port, and SAS Phy classes ... 135
4.4 Events ... 137
4.4.1 Reset sequences ... 137
4.4.2 Hard reset ... 139
4.4.2.1 Hard reset overview ... 139
4.4.2.2 Additional hard reset processing by SAS ports ... 139
4.4.2.3 Additional hard reset processing by expander ports ... 139
4.4.3 I_T nexus loss ... 139
4.4.4 Power loss expected ... 140
4.5 Expander device model ... 141
4.5.1 Expander device model overview ... 141
4.5.2 Expander ports ... 142
4.5.3 Expander connection manager (ECM) ... 143
4.5.4 Expander connection router (ECR) ... 143
4.5.5 Broadcast propagation processor (BPP) ... 144
4.5.6 Expander device interfaces ... 144
4.5.6.1 Expander device interface overview ... 144
4.5.6.2 Expander device interfaces detail ... 146
4.5.6.3 ECM interface ... 147
4.5.6.4 ECR interface ... 149
4.5.6.5 BPP interface ... 151
4.5.7 Expander device routing ... 152
4.5.7.1 Routing attributes and routing methods ... 152
4.5.7.2 Expander device topology routing attribute restrictions ... 153
4.5.7.3 Connection request routing ... 153
4.5.7.4 Expander route table ... 153
4.5.7.4.1 Expander route table overview ... 153
4.5.7.4.2 Phy-based expander route table ... 154
4.5.7.4.3 Expander-based expander route table ... 155
4.5.8 Expander device reduced functionality ... 155
4.5.9 Broadcast (Expander) handling ... 156
4.6 Discover process ... 156
4.6.1 Discover process overview ... 156
4.6.2 Starting the discover process (Broadcast (Change) handling) ... 156
4.6.3 Discover process traversal ... 157
4.6.4 Discover process in a self-configuring expander device ... 159
4.6.5 Enabling multiplexing ... 160
4.7 Configuration subprocess ... 160
4.7.1 Configuration subprocess overview ... 160
4.7.2 Allowed expander device topologies ... 161
4.7.3 Externally configurable expander device route table optimization ... 162
4.7.4 Externally configurable expander device expander route index order ... 163
4.8 Zoning ... 170

Documents
Document Sharing Hub

Full document details: ISO IEC 14776-263-2018

4.8.1 Zoning overview ... 170
4.8.2 Zoning expander device requirements ... 174
4.8.3 Zoning operation ... 177
4.8.3.1 Zone phy information ... 177
4.8.3.2 Zone groups ... 179
4.8.3.3 Zone permission table ... 180
4.8.3.4 Zoning expander route table ... 182
4.8.3.5 Source zone group and destination zone group determination ... 183
4.8.4 Zone phy information and link reset sequences ... 184
4.8.5 Broadcast processing in a zoning expander device with zoning enabled ... 187
4.8.6 Zone configuration ... 188
4.8.6.1 Zone configuration overview ... 188
4.8.6.2 Lock step ... 188
4.8.6.3 Load step ... 189
4.8.6.4 Activate step ... 190
4.8.6.5 Unlock step ... 190
4.8.6.6 Zone lock inactivity timer ... 191
4.8.6.7 Enable a zoning expander device ... 191
4.9 SAS device and expander device power conditions ... 191
4.10 Phy power conditions ... 192
4.10.1 Low phy power conditions ... 192
4.10.1.1 Low phy power conditions overview ... 192
4.10.1.2 Active phy power condition ... 192
4.10.1.3 Partial phy power condition ... 192
4.10.1.4 Slumber phy power condition ... 192
4.10.1.5 End device low phy power conditions ... 193
4.10.1.6 Expander device low phy power conditions ... 193
4.10.2 SATA phy power conditions ... 194
4.11 Phy test functions ... 194
4.11.1 Phy test functions overview ... 194
4.11.2 Transmit pattern phy test function ... 195
4.12 Phy events ... 195
4.13 Using POWER DISABLE signal to create a power on event ... 200
4.13.1 Using POWER DISABLE signal to create a power on event overview ... 200
4.13.2 Discovering POWER DISABLE signal support ... 200
4.13.3 Using a management device server to control the POWER DISABLE signal ... 201

5 Phy layer ... 202
5.1 Phy layer overview ... 202
5.2 8b10b coding ... 202
5.2.1 8b10b coding overview ... 202
5.2.2 8b10b coding notation conventions ... 202
5.3 Character encoding and decoding ... 203
5.3.1 Character encoding and decoding overview ... 203
5.3.2 Bit transmission order ... 203
5.3.3 Character transmission order ... 203
5.3.4 Frame transmission order ... 204
5.3.5 Running disparity (RD) ... 204
5.3.6 Data characters ... 204
5.3.7 Control characters ... 210
5.3.8 Encoding characters in the transmitter ... 211
5.3.9 Decoding characters in the receiver ... 211
5.4 Dwords, primitives, data dwords, and invalid dwords ... 212
5.5 Bit order ... 212
5.6 Out of band (OOB) signals ... 214
5.6.1 OOB signals overview ... 214
5.6.2 Transmission of OOB signals ... 215

Documents
Document Sharing Hub

Full document details: ISO IEC 14776-263-2018

5.6.3 Receiver detection of OOB signals ... 216
5.6.4 SATA port selection signal ... 218
5.6.5 Phy power conditions ... 218
5.7 Phy capabilities bits ... 218
5.8 BMC coding ... 222
5.8.1 BMC coding overview ... 222
5.8.2 TTIU bit cell encoding in the transmitter ... 223
5.8.3 TTIU bit transmission order ... 224
5.8.4 TTIU bit cell decoding in the receiver ... 224
5.9 Train_Tx-SNW TTIUs ... 225
5.9.1 Train_Tx-SNW TTIU format ... 225
5.9.2 Control/Status TTIU ... 226
5.9.3 Error Response TTIU ... 230
5.10 Phy reset sequences ... 233
5.10.1 Phy reset sequences overview ... 233
5.10.2 SATA phy reset sequence ... 234
5.10.2.1 SATA OOB sequence ... 234
5.10.2.2 SATA speed negotiation sequence ... 234
5.10.3 SAS to SATA phy reset sequence ... 235
5.10.4 SAS to SAS phy reset sequence ... 236
5.10.4.1 SAS OOB sequence ... 236
5.10.4.2 SAS speed negotiation sequence ... 239
5.10.4.2.1 SAS speed negotiation sequence overview ... 239
5.10.4.2.2 SAS speed negotiation sequence timing specifications ... 240
5.10.4.2.3 Speed negotiation window (SNW) definitions ... 241
5.10.4.2.3.1 SNW definitions overview ... 241
5.10.4.2.3.2 SNW-1, SNW-2, and Final-SNW ... 242
5.10.4.2.3.3 SNW-3 ... 243
5.10.4.2.3.4 Train_Tx-SNW ... 245
5.10.4.2.3.4.1 Phy's transmitter initial condition ... 245
5.10.4.2.3.4.2 Transmitter training ... 245
5.10.4.2.3.4.3 Pattern marker ... 246
5.10.4.2.3.5 Train_Rx-SNW ... 248
5.10.4.2.4 SAS speed negotiation sequence ... 251
5.10.4.2.5 SAS speed negotiation sequence examples ... 252
5.10.4.2.6 Train_Tx pattern sequence ... 260
5.10.4.2.6.1 Train_Tx pattern sequence overview ... 260
5.10.4.2.6.2 Train_Tx pattern initial sequence ... 261
5.10.4.2.6.3 Train_Tx pattern handshake sequence ... 264
5.10.4.2.6.3.1 Train_Tx pattern handshake sequence overview ... 264
5.10.4.2.6.3.2 Attached phy's receiver increment or decrement request ... 264
5.10.4.2.6.3.3 Attached phy's receiver reference_1, reference_2, or no_equalization request ... 267
5.10.4.2.6.4 Train_Tx pattern completion sequence ... 269
5.10.4.2.6.5 Invalid TTIU sequence ... 272
5.10.4.3 Multiplexing sequence ... 273
5.10.5 Phy reset sequence after devices are attached ... 274
5.11 Phy power condition sequences ... 275
5.11.1 Transitioning from the active phy power condition to a low phy power condition ... 275
5.11.2 Transitioning from a low phy power condition to the active phy power condition ... 276
5.11.3 Events during low phy power condition ... 276
5.12 SP (phy layer) state machine ... 278
5.12.1 SP state machine overview ... 278
5.12.2 SP transmitter and SP receiver ... 280
5.12.3 OOB sequence states ... 283
5.12.3.1 OOB sequence states overview ... 283
5.12.3.2 SP0:OOB_COMINIT state ... 284
5.12.3.2.1 State description ... 284

Documents
Document Sharing Hub
Full document details: ISO IEC 14776-263-2018

5.12.3.2.2 Transition SP0:OOB_COMINIT to SP1:OOB_AwaitCOMX ... 285
5.12.3.2.3 Transition SP0:OOB_COMINIT to SP3:OOB_AwaitCOMINIT_Sent ... 285
5.12.3.2.4 Transition SP0:OOB_COMINIT to SP4:OOB_COMSAS ... 285
5.12.3.3 SP1:OOB_AwaitCOMX state ... 285
5.12.3.3.1 State description ... 285
5.12.3.3.2 Transition SP1:OOB_AwaitCOMX to SP0:OOB_COMINIT ... 285
5.12.3.3.3 Transition SP1:OOB_AwaitCOMX to SP4:OOB_COMSAS ... 285
5.12.3.4 SP2:OOB_NoCOMSASTimeout state ... 286
5.12.3.4.1 State description ... 286
5.12.3.4.2 Transition SP2:OOB_NoCOMSASTimeout to SP0:OOB_COMINIT ... 286
5.12.3.4.3 Transition SP2:OOB_NoCOMSASTimeout to SP4:OOB_COMSAS ... 286
5.12.3.5 SP3:OOB_AwaitCOMINIT_Sent state ... 286
5.12.3.5.1 State description ... 286
5.12.3.5.2 Transition SP3:OOB_AwaitCOMINIT_Sent to SP4:OOB_COMSAS ... 286
5.12.3.6 SP4:OOB_COMSAS state ... 286
5.12.3.6.1 State description ... 286
5.12.3.6.2 Transition SP4:OOB_COMSAS to SP5:OOB_AwaitCOMSAS_Sent ... 287
5.12.3.6.3 Transition SP4:OOB_COMSAS to SP6:OOB_AwaitNoCOMSAS ... 287
5.12.3.6.4 Transition SP4:OOB_COMSAS to SP7:OOB_AwaitCOMSAS ... 287
5.12.3.7 SP5:OOB_AwaitCOMSAS_Sent state ... 287
5.12.3.7.1 State description ... 287
5.12.3.7.2 Transition SP5:OOB_AwaitCOMSAS_Sent to SP6:OOB_AwaitNoCOMSAS ... 287
5.12.3.8 SP6:OOB_AwaitNoCOMSAS state ... 287
5.12.3.8.1 State description ... 287
5.12.3.8.2 Transition SP6:OOB_AwaitNoCOMSAS to SP0:OOB_COMINIT ... 287
5.12.3.8.3 Transition SP6:OOB_AwaitNoCOMSAS to SP8:SAS_Start ... 288
5.12.3.9 SP7:OOB_AwaitCOMSAS state ... 288
5.12.3.9.1 State description ... 288
5.12.3.9.2 Transition SP7:OOB_AwaitCOMSAS to SP2:OOB_NoCOMSASTimeout ... 288
5.12.3.9.3 Transition SP7:OOB_AwaitCOMSAS to SP6:OOB_AwaitNoCOMSAS ... 288
5.12.3.9.4 Transition SP7:OOB_AwaitCOMSAS to SP16:SATA_COMWAKE ... 288
5.12.3.9.5 Transition SP7:OOB_AwaitCOMSAS to SP26:SATA _SpinupHold ... 288
5.12.4 SAS speed negotiation states ... 289
5.12.4.1 SAS speed negotiation states overview ... 289
5.12.4.2 Negotiation idle ... 289
5.12.4.3 SP8:SAS_Start state ... 292
5.12.4.3.1 State description ... 292
5.12.4.3.2 Transition SP8:SAS_Start to SP0:OOB_COMINIT ... 292
5.12.4.3.3 Transition SP8:SAS_Start to SP1:OOB_AwaitCOMX ... 293
5.12.4.3.4 Transition SP8:SAS_Start to SP9:SAS_WindowNotSupported ... 293
5.12.4.3.5 Transition SP8:SAS_Start to SP10:SAS_AwaitALIGN ... 293
5.12.4.3.6 Transition SP8:SAS_Start to SP27:SAS_Settings ... 293
5.12.4.4 SP9:SAS_WindowNotSupported state ... 293
5.12.4.4.1 State description ... 293
5.12.4.4.2 Transition SP9:SAS_WindowNotSupported to SP0:OOB_COMINIT ... 293
5.12.4.4.3 Transition SP9:SAS_WindowNotSupported to SP14:SAS_Fail ... 293
5.12.4.5 SP10:SAS_AwaitALIGN state ... 293
5.12.4.5.1 State description ... 293
5.12.4.5.2 Transition SP10:SAS_AwaitALIGN to SP0:OOB_COMINIT ... 294
5.12.4.5.3 Transition SP10:SAS_AwaitALIGN to SP11:SAS_AwaitALIGN1 ... 294
5.12.4.5.4 Transition SP10:SAS_AwaitALIGN to SP12:SAS_AwaitSNW ... 294
5.12.4.5.5 Transition SP10:SAS_AwaitALIGN to SP14:SAS_Fail ... 294
5.12.4.6 SP11:SAS_AwaitALIGN1 state ... 294
5.12.4.6.1 State description ... 294
5.12.4.6.2 Transition SP11:SAS_AwaitALIGN1 to SP0:OOB_COMINIT ... 294
5.12.4.6.3 Transition SP11:SAS_AwaitALIGN1 to SP12:SAS_AwaitSNW ... 294
5.12.4.6.4 Transition SP11:SAS_AwaitALIGN1 to SP14:SAS_Fail ... 294

Documents
Document Sharing Hub
Full document details: ISO IEC 14776-263-2018

5.12.4.7 SP12:SAS_AwaitSNW state ... 295
5.12.4.7.1 State description ... 295
5.12.4.7.2 Transition SP12:SAS_AwaitSNW to SP0:OOB_COMINIT ... 295
5.12.4.7.3 Transition SP12:SAS_AwaitSNW to SP13:SAS_Pass ... 295
5.12.4.8 SP13:SAS_Pass state ... 295
5.12.4.8.1 State description ... 295
5.12.4.8.2 Transition SP13:SAS_Pass to SP0:OOB_COMINIT ... 295
5.12.4.8.3 Transition SP13:SAS_Pass to SP8:SAS_Start ... 295
5.12.4.8.4 Transition SP13:SAS_Pass to SP15:SAS_PHY_Ready ... 296
5.12.4.9 SP14:SAS_Fail state ... 296
5.12.4.9.1 State description ... 296
5.12.4.9.2 Transition SP14:SAS_Fail to SP1:OOB_AwaitCOMX ... 296
5.12.4.9.3 Transition SP14:SAS_Fail to SP8:SAS_Start ... 296
5.12.4.10 SP15:SAS_PHY_Ready state ... 296
5.12.4.10.1 State description ... 296
5.12.4.10.2 Transition SP15:SAS_PHY_Ready to SP0:OOB_COMINIT ... 297
5.12.4.10.3 Transition SP15:SAS_PHY_Ready to SP31:SAS_PS_Low_Phy_Power ... 297
5.12.4.11 SP27:SAS_Settings state ... 297
5.12.4.11.1 State description ... 297
5.12.4.11.2 Transition SP27:SAS_Settings to SP0:OOB_COMINIT ... 297
5.12.4.11.3 Transition SP27:SAS_Settings to SP1:OOB_AwaitCOMX ... 298
5.12.4.11.4 Transition SP27:SAS_Settings to SP8:SAS_Start ... 298
5.12.4.11.5 Transition SP27:SAS_Settings to SP28:SAS_TrainSetup ... 298
5.12.4.12 SP28:SAS_TrainSetup ... 298
5.12.4.12.1 State description ... 298
5.12.4.12.2 Transition SP28:SAS_TrainSetup to SP0:OOB_COMINIT ... 299
5.12.4.12.3 Transition SP28:SAS_TrainSetup to SP29:SAS_Train_Rx ... 299
5.12.4.12.4 Transition SP28:SAS_TrainSetup to SP34:SAS_Train_Tx ... 299
5.12.4.13 SP34:SAS_Train_Tx state ... 299
5.12.4.13.1 State description ... 299
5.12.4.13.2 Transition SP34:SAS_Train_Tx to SP1:OOB_AwaitCOMX ... 299
5.12.4.13.3 Transition SP34:SAS_Train_Tx to SP28:SAS_TrainSetup ... 299
5.12.4.13.4 Transition SP34:SAS_Train_Tx to SP29:SAS_Train_Rx ... 300
5.12.4.14 SP29:SAS_Train_Rx state ... 300
5.12.4.14.1 State description ... 300
5.12.4.14.2 Transition SP29:SAS_Train_Rx to SP0:OOB_COMINIT ... 300
5.12.4.14.3 Transition SP29:SAS_Train_Rx to SP1:OOB_AwaitCOMX ... 300
5.12.4.14.4 Transition SP29:SAS_Train_Rx to SP28:SAS_TrainSetup ... 301
5.12.4.14.5 Transition SP29:SAS_Train_Rx to SP30:SAS_TrainingDone ... 301
5.12.4.15 SP30:SAS_TrainingDone state ... 301
5.12.4.15.1 State description ... 301
5.12.4.15.2 Transition SP30:SAS_TrainingDone to SP0:OOB_COMINIT ... 301
5.12.4.15.3 Transition SP30:SAS_TrainingDone to SP1:OOB_AwaitCOMX ... 302
5.12.4.15.4 Transition SP30:SAS_TrainingDone to SP28:SAS_TrainSetup ... 302
5.12.4.15.5 Transition SP30:SAS_TrainingDone to SP15:SAS_PHY_Ready ... 302
5.12.5 SAS phy power conditions states ... 302
5.12.5.1 SAS phy power conditions states overview ... 302
5.12.5.2 SP31:SAS_PS_Low_Phy_Power state ... 303
5.12.5.2.1 State description ... 303
5.12.5.2.2 Transition SP31:SAS_PS_Low_Phy_Power to SP0:OOB_COMINIT ... 304
5.12.5.2.3 Transition SP31:SAS_PS_Low_Phy_Power to SP32:SAS_PS_ALIGN0 ... 304
5.12.5.3 SP32:SAS_PS_ALIGN0 state ... 304
5.12.5.3.1 State description ... 304
5.12.5.3.2 Transition SP32:SAS_PS _ALIGN0 state to SP0:OOB_COMINIT ... 304
5.12.5.3.3 Transition SP32:SAS_PS _ALIGN0 to SP33:SAS_PS _ALIGN1 ... 305
5.12.5.4 SP33:SAS_PS_ALIGN1 state ... 305
5.12.5.4.1 State description ... 305

Documents
Document Sharing Hub
Full document details: ISO IEC 14776-263-2018

5.12.5.4.2 Transition SP33:SAS_PS_ALIGN1 state to SP0:OOB_COMINIT ... 305
5.12.5.4.3 Transition SP33:SAS_PS_ALIGN1 state to SP15:SAS_PHY_Ready ... 305
5.12.6 SATA host emulation states ... 305
5.12.6.1 SATA host emulation states overview ... 305
5.12.6.2 SP16:SATA_COMWAKE state ... 307
5.12.6.2.1 State description ... 307
5.12.6.2.2 Transition SP16:SATA_COMWAKE to SP0:OOB_COMINIT ... 307
5.12.6.2.3 Transition SP16:SATA_COMWAKE to SP17:SATA_AwaitCOMWAKE ... 307
5.12.6.3 SP17:SATA_AwaitCOMWAKE state ... 307
5.12.6.3.1 State description ... 307
5.12.6.3.2 Transition SP17:SATA_AwaitCOMWAKE to SP0:OOB_COMINIT ... 307
5.12.6.3.3 Transition SP17:SATA_AwaitCOMWAKE to SP18:SATA_AwaitNoCOMWAKE ... 307
5.12.6.4 SP18:SATA_AwaitNoCOMWAKE state ... 307
5.12.6.4.1 State description ... 307
5.12.6.4.2 Transition SP18:SATA_AwaitNoCOMWAKE to SP0:OOB_COMINIT ... 307
5.12.6.4.3 Transition SP18:SATA_AwaitNoCOMWAKE to SP19:SATA_AwaitALIGN ... 307
5.12.6.5 SP19:SATA_AwaitALIGN state ... 308
5.12.6.5.1 State description ... 308
5.12.6.5.2 Transition SP19:SATA_AwaitALIGN to SP0:OOB_COMINIT ... 308
5.12.6.5.3 Transition SP19:SATA_AwaitALIGN to SP20:SATA_AdjustSpeed ... 308
5.12.6.6 SP20:SATA_AdjustSpeed state ... 308
5.12.6.6.1 State description ... 308
5.12.6.6.2 Transition SP20:SATA_AdjustSpeed to SP0:OOB_COMINIT ... 308
5.12.6.6.3 Transition SP20:SATA_AdjustSpeed to SP21:SATA_TransmitALIGN ... 309
5.12.6.7 SP21:SATA_TransmitALIGN state ... 309
5.12.6.7.1 State description ... 309
5.12.6.7.2 Transition SP21:SATA_TransmitALIGN to SP0:OOB_COMINIT ... 309
5.12.6.7.3 Transition SP21:SATA_TransmitALIGN to SP22:SATA_PHY_Ready ... 309
5.12.6.8 SP22:SATA_PHY_Ready state ... 309
5.12.6.8.1 State description ... 309
5.12.6.8.2 Transition SP22:SATA_PHY_Ready to SP0:OOB_COMINIT ... 309
5.12.6.8.3 Transition SP22:SATA_PHY_Ready to SP23:SATA_PM_Partial ... 310
5.12.6.8.4 Transition SP22:SATA_PHY_Ready to SP24:SATA_PM_Slumber ... 310
5.12.6.9 SP23:SATA_PM_Partial state ... 310
5.12.6.9.1 State description ... 310
5.12.6.9.2 Transition SP23:SATA_PM_Partial to SP0:OOB_COMINIT ... 310
5.12.6.9.3 Transition SP23:SATA_PM_Partial to SP16:SATA_COMWAKE ... 310
5.12.6.9.4 Transition SP23:SATA_PM_Partial to SP19:SATA_AwaitALIGN ... 310
5.12.6.10 SP24:SATA_PM_Slumber state ... 310
5.12.6.10.1 State description ... 310
5.12.6.10.2 Transition SP24:SATA_PM_Slumber to SP0:OOB_COMINIT ... 310
5.12.6.10.3 Transition SP24:SATA_PM_Slumber to SP16:SATA_COMWAKE ... 311
5.12.6.10.4 Transition SP24:SATA_PM_Slumber to SP19:SATA_AwaitALIGN ... 311
5.12.7 SATA port selector state SP25:SATA_PortSel ... 311
5.12.7.1 State description ... 311
5.12.7.2 Transition SP25:SATA_PortSel to SP1:OOB_AwaitCOMX ... 311
5.12.8 SATA spinup hold state SP26:SATA_SpinupHold ... 312
5.12.8.1 State description ... 312
5.12.8.2 Transition SP26:SATA_SpinupHold to SP0:OOB_COMINIT ... 312
5.13 SP_DWS (phy layer dword synchronization) state machine ... 312
5.13.1 SP_DWS state machine overview ... 312
5.13.2 SP_DWS receiver ... 314
5.13.3 SP_DWS0:AcquireSync state ... 315
5.13.3.1 State description ... 315
5.13.3.2 Transition SP_DWS0:AcquireSync to SP_DWS1:Valid1 ... 315
5.13.4 SP_DWS1:Valid1 state ... 316
5.13.4.1 State description ... 316

Documents
Document Sharing Hub
Full document details: ISO IEC 14776-263-2018

5.13.4.2 Transition SP_DWS1:Valid1 to SP_DWS0:AcquireSync ... 316
5.13.4.3 Transition SP_DWS1:Valid1 to SP_DWS2:Valid2 ... 316
5.13.5 SP_DWS2:Valid2 state ... 316
5.13.5.1 State description ... 316
5.13.5.2 Transition SP_DWS2:Valid2 to SP_DWS0:AcquireSync ... 316
5.13.5.3 Transition SP_DWS2:Valid2 to SP_DWS3:SyncAcquired ... 316
5.13.6 SP_DWS3:SyncAcquired state ... 316
5.13.6.1 State description ... 316
5.13.6.2 Transition SP_DWS3:SyncAcquired to SP_DWS0:AcquireSync ... 317
5.13.6.3 Transition SP_DWS3:SyncAcquired to SP_DWS4:Lost1 ... 317
5.13.7 SP_DWS4:Lost1 state ... 317
5.13.7.1 State description ... 317
5.13.7.2 Transition SP_DWS4:Lost1 to SP_DWS0:AcquireSync ... 317
5.13.7.3 Transition SP_DWS4:Lost1 to SP_DWS5:Lost1Recovered ... 317
5.13.7.4 Transition SP_DWS4:Lost1 to SP_DWS6:Lost2 ... 317
5.13.8 SP_DWS5:Lost1Recovered state ... 317
5.13.8.1 State description ... 317
5.13.8.2 Transition SP_DWS5:Lost1Recovered to SP_DWS0:AcquireSync ... 317
5.13.8.3 Transition SP_DWS5:Lost1Recovered to SP_DWS3:SyncAcquired ... 318
5.13.8.4 Transition SP_DWS5:Lost1Recovered to SP_DWS6:Lost2 ... 318
5.13.9 SP_DWS6:Lost2 state ... 318
5.13.9.1 State description ... 318
5.13.9.2 Transition SP_DWS6:Lost2 to SP_DWS0:AcquireSync ... 318
5.13.9.3 Transition SP_DWS6:Lost2 to SP_DWS7:Lost2Recovered ... 318
5.13.9.4 Transition SP_DWS6:Lost2 to SP_DWS8:Lost3 ... 318
5.13.10 SP_DWS7:Lost2Recovered state ... 318
5.13.10.1 State description ... 318
5.13.10.2 Transition SP_DWS7:Lost2Recovered to SP_DWS0:AcquireSync ... 318
5.13.10.3 Transition SP_DWS7:Lost2Recovered to SP_DWS4:Lost1 ... 319
5.13.10.4 Transition SP_DWS7:Lost2Recovered to SP_DWS8:Lost3 ... 319
5.13.11 SP_DWS8:Lost3 state ... 319
5.13.11.1 State description ... 319
5.13.11.2 Transition SP_DWS8:Lost3 to SP_DWS0:AcquireSync ... 319
5.13.11.3 Transition SP_DWS8:Lost3 to SP_DWS9:Lost3Recovered ... 319
5.13.12 SP_DWS9:Lost3Recovered state ... 319
5.13.12.1 State description ... 319
5.13.12.2 Transition SP_DWS9:Lost3Recovered to SP_DWS0:AcquireSync ... 319
5.13.12.3 Transition SP_DWS9:Lost3Recovered to SP_DWS6:Lost2 ... 320
5.14 PTT (phy layer transmitter training) state machines ... 320
5.14.1 PTT state machines overview ... 320
5.14.2 SP transmitter additions for transmitter training ... 320
5.14.2.1 SP transmitter additions for transmitter training overview ... 320
5.14.2.2 TTIU transmit setup ... 321
5.14.2.3 No_equalization, reference_1, and reference_2 coefficient settings request ... 321
5.14.2.4 Coefficient limits ... 321
5.14.2.5 Coefficient request result of update complete ... 321
5.14.2.5.1 Coefficient request processing ... 321
5.14.2.5.2 Coefficient adjustment completes ... 322
5.14.2.5.3 No coefficient adjustment ... 322
5.14.2.6 Coefficient request result of maximum ... 322
5.14.2.6.1 Coefficient request processing ... 322
5.14.2.6.2 Coefficient adjustment completes ... 323
5.14.2.6.3 No coefficient adjustment ... 323
5.14.2.7 Coefficient request result of minimum ... 323
5.14.2.7.1 Coefficient request processing ... 323
5.14.2.7.2 Coefficient adjustment completes ... 323
5.14.2.7.3 No coefficient adjustment ... 323

Documents
Document Sharing Hub
Full document details: ISO IEC 14776-263-2018

5.14.3 SP receiver additions for transmitter training ... 324
5.14.4 PTT_T (phy layer transmitter training transmit pattern) state machine ... 325
5.14.4.1 PTT_T state machine overview ... 325
5.14.4.2 PTT_T0:Idle state ... 327
5.14.4.2.1 State description ... 327
5.14.4.2.2 Transition PTT_T0:Idle to PTT_T1:Initialize ... 327
5.14.4.3 PTT_T1:Initialize state ... 327
5.14.4.3.1 State description ... 327
5.14.4.3.2 Transition PTT_T1:Initialize to PTT_T0:Idle ... 327
5.14.4.3.3 Transition PTT_T1:Initialize to PTT_T2:Tx_Training ... 328
5.14.4.4 PTT_T2:Tx_Training state ... 328
5.14.4.4.1 State description ... 328
5.14.4.4.2 Entry conditions ... 328
5.14.4.4.3 Control word and status word mappings ... 329
5.14.4.4.4 Error message handling ... 330
5.14.4.4.5 Resetting attached phy's transmitter ... 330
5.14.4.4.6 Local phy's transmitter and attached phy's transmitter training completed ... 331
5.14.4.4.7 Transition PTT_T2:Tx_Training to PTT_T0:Idle ... 331
5.14.4.4.8 Transition PTT_T2:Tx_Training to PTT_T3:Local_Tx_Training ... 332
5.14.4.5 PTT_T3:Local_Tx_Training state ... 332
5.14.4.5.1 State description ... 332
5.14.4.5.2 Entry conditions ... 332
5.14.4.5.3 Status word mappings ... 332
5.14.4.5.4 Local phy's transmitter and attached phy's transmitter training completed ... 332
5.14.4.5.5 Error message handling ... 333
5.14.4.5.6 Transition PTT_T3:Local_Tx_Training to PTT_T0:Idle ... 333
5.14.5 PTT_R (phy layer transmitter training receive pattern) state machine ... 333
5.14.5.1 PTT_R state machine overview ... 333
5.14.5.2 PTT_R0:Idle state ... 335
5.14.5.2.1 State description ... 335
5.14.5.2.2 Transition PTT_R0:Idle to PTT_R1:Initialize ... 335
5.14.5.3 PTT_R1:Initialize state ... 335
5.14.5.3.1 State description ... 335
5.14.5.3.2 Transition PTT_R1:Initialize to PTT_R0:Idle ... 335
5.14.5.3.3 Transition PTT_R1:Initialize to PTT_R2:Receive_Train_Tx_Pattern ... 335
5.14.5.4 PTT_R2:Receive_Train_Tx_Pattern state ... 335
5.14.5.4.1 State description ... 335
5.14.5.4.2 Transition PTT_R2:Receive_Train_Tx_Pattern to PTT_R0:Idle ... 341
5.14.5.4.3 Transition PTT_R2:Receive_Train_Tx_Pattern to PTT_R1:Initialize ... 341
5.14.6 PTT_SC (phy layer transmitter training set transmitter coefficient) state machines ... 341
5.14.6.1 PTT_SC (phy layer transmitter training set transmitter coefficient) state machines overview 341
5.14.6.2 PTT_SC1 state machine overview ... 343
5.14.6.3 PTT_SC1_0:Idle state ... 343
5.14.6.3.1 State description ... 343
5.14.6.3.2 Transition PTT_SC1_0:Idle to PTT_SC1_1:Wait_Inc_Dec ... 343
5.14.6.4 PTT_SC1_1:Wait_Inc_Dec state ... 343
5.14.6.4.1 State description ... 343
5.14.6.4.2 Transition PTT_SC1_1:Wait_Inc_Dec to PTT_SC1_0:Idle ... 343
5.14.6.4.3 Transition PTT_SC1_1:Wait_Inc_Dec to PTT_SC1_2:Set_Coefficient ... 343
5.14.6.5 PTT_SC1_2:Set_Coefficient state ... 344
5.14.6.5.1 State description ... 344
5.14.6.5.2 Transition PTT_SC1_2:Set_Coefficient to PTT_SC1_0:Idle ... 345
5.14.6.5.3 Transition PTT_SC1_2:Set_Coefficient to PTT_SC1_3:Wait_Hold ... 345
5.14.6.6 PTT_SC1_3:Wait_Hold state ... 345
5.14.6.6.1 State description ... 345
5.14.6.6.2 Transition PTT_SC1_3:Wait_Hold to PTT_SC1_0:Idle ... 345
5.14.6.6.3 Transition PTT_SC1_3:Wait_Hold to PTT_SC1_1:Wait_Inc_Dec ... 345

Documents
Document Sharing Hub
Full document details: ISO IEC 14776-263-2018

5.14.7 PTT_SC2 (phy layer transmitter training set transmitter coefficient 2) state machine 345
5.14.8 PTT_SC3 (phy layer transmitter training set transmitter coefficient 3) state machine 346
5.14.9 PTT_GC (phy layer transmitter training get transmitter coefficient) state machines 346
5.14.9.1 PTT_GC (phy layer transmitter training get transmitter coefficient) state machines overview 346
5.14.9.2 PTT_GC1 state machine 347
5.14.9.3 PTT_GC1_0:Idle state 348
5.14.9.3.1 State description 348
5.14.9.3.2 Transition PTT_GC1_0:Idle to PTT_GC1_1:Get_Coefficient 348
5.14.9.4 PTT_GC1_1:Get_Coefficient state 348
5.14.9.4.1 State description 348
5.14.9.4.2 Transition PTT_GC1_1:Get_Coefficient to PTT_GC1_0:Idle 348
5.14.9.4.3 Transition PTT_GC1_1:Get_Coefficient to PTT_GC1_2:Wait_Restart 348
5.14.9.5 PTT_GC1_2:Wait_Restart state 349
5.14.9.5.1 State description 349
5.14.9.5.2 Transition PTT_GC1_2:Wait_Restart to PTT_GC1_0:Idle 349
5.14.10 PTT_GC2 (phy layer transmitter training get transmitter coefficient 2) state machine 349
5.14.11 PTT_GC3 (phy layer transmitter training get transmitter coefficient 3) state machine 349
5.14.12 PTT_PL (phy layer transmitter training pattern lock) state machine 350
5.14.12.1 PTT_PL state machine overview 350
5.14.12.2 PTT_PL0:Idle state 351
5.14.12.2.1 State description 351
5.14.12.2.2 Transition PTT_PL0:Idle to PTT_PL1:Acquire_Lock 352
5.14.12.3 PTT_PL1:Acquire_Lock state 352
5.14.12.3.1 State description 352
5.14.12.3.2 Transition PTT_PL1:Acquire_Lock to PTT_PL2:Valid 352
5.14.12.4 PTT_PL2:Valid state 352
5.14.12.4.1 State description 352
5.14.12.4.2 Transition PTT_PL2:Valid to PTT_PL1:Acquire_Lock 352
5.14.12.4.3 Transition PTT_PL2:Valid to PTT_PL3:Lock_Acquired 352
5.14.12.5 PTT_PL3:Lock_Acquired state 352
5.14.12.5.1 State description 352
5.14.12.5.2 Transition PTT_PL3:Lock_Acquired to PTT_PL4:Lost1 352
5.14.12.6 PTT_PL4:Lost1 state 353
5.14.12.6.1 State description 353
5.14.12.6.2 Transition PTT_PL4:Lost1 to PTT_PL3:Lock_Acquired 353
5.14.12.6.3 Transition PTT_PL4:Lost1 to PTT_PL5:Lost2 353
5.14.12.7 PTT_PL5:Lost2 state 353
5.14.12.7.1 State description 353
5.14.12.7.2 Transition PTT_PL5:Lost2 to PTT_PL3:Lock_Acquired 353
5.14.12.7.3 Transition PTT_PL5:Lost2 to PTT_PL6:Lost3 353
5.14.12.8 PTT_PL6:Lost3 state 353
5.14.12.8.1 State description 353
5.14.12.8.2 Transition PTT_PL6:Lost3 to PTT_PL3:Lock_Acquired 353
5.14.12.8.3 Transition PTT_PL6:Lost3 to PTT_PL7:Lost4 353
5.14.12.9 PTT_PL7:Lost4 state 353
5.14.12.9.1 State description 353
5.14.12.9.2 Transition PTT_PL7:Lost4 to PTT_PL3:Lock_Acquired 354
5.14.12.9.3 Transition PTT_PL7:Lost4 to PTT_PL1:Acquire_Lock 354
5.15 Multiplexing 354
5.16 Spinup 355

6 Link layer 356
6.1 Link layer overview 356
6.2 Primitives 356
6.2.1 Primitives overview 356
6.2.2 Primitive summary 357
6.2.3 Primitive encodings 366

Documents
Document Sharing Hub

Full document details: ISO IEC 14776-263-2018

6.2.4 Primitive sequences ... 371
6.2.4.1 Primitive sequences overview ... 371
6.2.4.2 Single primitive sequence ... 371
6.2.4.3 Repeated primitive sequence ... 371
6.2.4.4 Continued primitive sequence ... 372
6.2.4.5 Extended primitive sequence ... 372
6.2.4.6 Triple primitive sequence ... 373
6.2.4.7 Redundant primitive sequence ... 374
6.2.5 Deletable primitives ... 375
6.2.5.1 ALIGN ... 375
6.2.5.2 MUX (Multiplex) ... 376
6.2.5.3 NOTIFY ... 377
6.2.5.3.1 NOTIFY overview ... 377
6.2.5.3.2 NOTIFY (ENABLE SPINUP) ... 377
6.2.5.3.3 NOTIFY (POWER LOSS EXPECTED) ... 378
6.2.5.4 OOB_IDLE ... 379
6.2.6 Primitives not specific to type of connections ... 379
6.2.6.1 AIP (Arbitration in progress) ... 379
6.2.6.2 BREAK ... 379
6.2.6.3 BREAK_REPLY ... 380
6.2.6.4 BROADCAST ... 380
6.2.6.5 CLOSE ... 380
6.2.6.6 EOAF (End of address frame) ... 381
6.2.6.7 ERROR ... 381
6.2.6.8 HARD_RESET ... 381
6.2.6.9 OPEN_ACCEPT ... 381
6.2.6.10 OPEN_REJECT ... 381
6.2.6.11 PS_ACK ... 384
6.2.6.12 PS_NAK ... 384
6.2.6.13 PS_REQ ... 384
6.2.6.14 PWR_ACK ... 384
6.2.6.15 PWR_DONE ... 384
6.2.6.16 PWR_GRANT ... 384
6.2.6.17 PWR_REQ ... 384
6.2.6.18 SOAF (Start of address frame) ... 385
6.2.6.19 TRAIN ... 385
6.2.6.20 TRAIN_DONE ... 385
6.2.7 Primitives used only inside SSP and SMP connections ... 385
6.2.7.1 ACK (Acknowledge) ... 385
6.2.7.2 CREDIT_BLOCKED ... 385
6.2.7.3 DONE ... 385
6.2.7.4 EOF (End of frame) ... 386
6.2.7.5 EXTEND_CONNECTION ... 386
6.2.7.6 NAK (Negative acknowledgement) ... 386
6.2.7.7 RRDY (Receiver ready) ... 387
6.2.7.8 SOF (Start of frame) ... 387
6.2.8 Primitives used only inside STP connections and on SATA physical links ... 387
6.2.8.1 SATA_ERROR ... 387
6.2.8.2 SATA_PMACK, SATA_PMNAK, SATA_PMREQ_P, and SATA_PMREQ_S (Power management acknowledgements and requests) ... 388
6.2.8.3 SATA_HOLD and SATA_HOLDA (Hold and hold acknowledge) ... 388
6.2.8.4 SATA_R_RDY and SATA_X_RDY (Receiver ready and transmitter ready) ... 388
6.2.8.5 Other primitives used inside STP connections and on SATA physical links ... 388
6.3 Physical link rate tolerance management ... 388
6.3.1 Physical link rate tolerance management overview ... 388
6.3.2 Phys originating dwords ... 389
6.3.3 Expander phys forwarding dwords ... 390

Documents
Document Sharing Hub

Full document details: ISO IEC 14776-263-2018

6.4 Idle physical links ... 391
6.5 CRC ... 391
6.5.1 CRC overview ... 391
6.5.2 CRC generation ... 393
6.5.3 CRC checking ... 395
6.6 Scrambling ... 396
6.7 Bit order of CRC and scrambler ... 398
6.8 Address frames ... 401
6.8.1 Address frames overview ... 401
6.8.2 IDENTIFY address frame ... 403
6.8.3 OPEN address frame ... 407
6.9 Link reset sequence ... 411
6.9.1 Link reset sequence overview ... 411
6.9.2 Expander device handling of link reset sequences ... 414
6.10 SL_IR (link layer identification and hard reset) state machines ... 414
6.10.1 SL_IR state machines overview ... 414
6.10.2 SL_IR transmitter and receiver ... 416
6.10.3 SL_IR_TIR (transmit IDENTIFY or HARD_RESET) state machine ... 416
6.10.3.1 SL_IR_TIR state machine overview ... 416
6.10.3.2 SL_IR_TIR1:Idle state ... 417
6.10.3.2.1 State description ... 417
6.10.3.2.2 Transition SL_IR_TIR1:Idle to SL_IR_TIR2:Transmit_Identify ... 417
6.10.3.2.3 Transition SL_IR_TIR1:Idle to SL_IR_TIR3:Transmit_Hard_Reset ... 417
6.10.3.3 SL_IR_TIR2:Transmit_Identify state ... 417
6.10.3.3.1 State description ... 417
6.10.3.3.2 Transition SL_IR_TIR2:Transmit_Identify to SL_IR_TIR4:Completed ... 417
6.10.3.4 SL_IR_TIR3:Transmit_Hard_Reset state ... 417
6.10.3.4.1 State description ... 417
6.10.3.4.2 Transition SL_IR_TIR3:Transmit_Hard_Reset to SL_IR_TIR4:Completed ... 417
6.10.3.5 SL_IR_TIR4:Completed state ... 418
6.10.4 SL_IR_RIF (receive IDENTIFY address frame) state machine ... 418
6.10.4.1 SL_IR_RIF state machine overview ... 418
6.10.4.2 SL_IR_RIF1:Idle state ... 418
6.10.4.2.1 State description ... 418
6.10.4.2.2 Transition SL_IR_RIF1:Idle to SL_IR_RIF2:Receive_Identify_Frame ... 418
6.10.4.3 SL_IR_RIF2:Receive_Identify_Frame state ... 418
6.10.4.3.1 State description ... 418
6.10.4.3.2 Transition SL_IR_RIF2:Receive_Identify_Frame to SL_IR_RIF3:Completed ... 419
6.10.4.4 SL_IR_RIF3:Completed state ... 419
6.10.5 SL_IR_IRC (identification and hard reset control) state machine ... 419
6.10.5.1 SL_IR_IRC state machine overview ... 419
6.10.5.2 SL_IR_IRC1:Idle state ... 419
6.10.5.2.1 State description ... 419
6.10.5.2.2 Transition SL_IR_IRC1:Idle to SL_IR_IRC2:Wait ... 419
6.10.5.3 SL_IR_IRC2:Wait state ... 419
6.10.5.3.1 State description ... 419
6.10.5.3.2 Transition SL_IR_IRC2:Wait to SL_IR_IRC3:Completed ... 420
6.10.5.4 SL_IR_IRC3:Completed state ... 420
6.11 Entering a low phy power condition ... 421
6.12 Power control and SL_P (link layer power control) state machines ... 421
6.12.1 Power source device ... 421
6.12.2 Power consumer device ... 422
6.12.3 NOTIFY (ENABLE SPINUP) usage ... 422
6.12.4 SL_P_S (link layer power source device) state machine ... 423
6.12.4.1 SL_P_S state machine overview ... 423
6.12.4.2 SL_P_S transmitter and SL_P_S receiver ... 424
6.12.4.3 SL_P_S_1:Idle state ... 425

Documents
Document Sharing Hub
Full document details: ISO IEC 14776-263-2018

6.12.4.3.1 State description ... 425
6.12.4.3.2 Transition SL_P_S_1:Idle to SL_P_S_2:Wait_Grant ... 425
6.12.4.4 SL_P_S_2:Wait_Grant state ... 425
6.12.4.4.1 State description ... 425
6.12.4.4.2 Transition SL_P_S_2:Wait_Grant to SL_P_S_1:Idle ... 426
6.12.4.4.3 Transition SL_P_S_2:Wait_Grant to SL_P_S_3:Wait_Done ... 426
6.12.4.5 SL_P_S_3:Wait_Done state ... 426
6.12.4.5.1 State description ... 426
6.12.4.5.2 Transition SL_P_S_3:Wait_Done to SL_P_S_1:Idle ... 427
6.12.5 SL_P_C (link layer power consumer device) state machine ... 427
6.12.5.1 SL_P_C state machine overview ... 427
6.12.5.2 SL_P_C receiver ... 429
6.12.5.3 SL_P_C_1:Idle state ... 429
6.12.5.3.1 State description ... 429
6.12.5.3.2 Transition SL_P_C_1:Idle to SL_P_C_2:Request_Power ... 429
6.12.5.4 SL_P_C_2:Request_Power state ... 429
6.12.5.4.1 State description ... 429
6.12.5.4.2 Transition SL_P_C_2:Request_Power to SL_P_C_1:Idle ... 430
6.12.5.4.3 Transition SL_P_C_2:Request_Power to SL_P_C_3:Wait_Grant ... 430
6.12.5.4.4 Transition SL_P_C_2:Request_Power to SL_P_C_4:Wait_Done ... 430
6.12.5.5 SL_P_C_3:Wait_Grant state ... 430
6.12.5.5.1 State description ... 430
6.12.5.5.2 Transition SL_P_C_3:Wait_Grant to SL_P_C_1:Idle ... 431
6.12.5.5.3 Transition SL_P_C_3:Wait_Grant to SL_P_C_4:Wait_Done ... 431
6.12.5.6 SL_P_C_4:Wait_Done state ... 431
6.12.5.6.1 State description ... 431
6.12.5.6.2 Transition SL_P_C_4:Wait_Done to SL_P_C_1:Idle ... 431
6.13 SAS domain changes (Broadcast (Change) usage) ... 432
6.14 Connections ... 433
6.14.1 Connections overview ... 433
6.14.2 Opening a connection ... 433
6.14.2.1 Connection request ... 433
6.14.2.2 Results of a connection request ... 435
6.14.3 Arbitration fairness ... 435
6.14.4 Arbitration inside an expander device ... 436
6.14.4.1 Expander logical phy arbitration requirements ... 436
6.14.4.2 ECM arbitration requirements ... 437
6.14.4.2.1 ECM arbitration requirements overview ... 437
6.14.4.2.2 Arbitrating confirmations ... 438
6.14.4.2.3 Arb Won confirmation ... 438
6.14.4.2.4 Arb Lost confirmation ... 439
6.14.4.2.5 Arb Reject confirmation ... 439
6.14.4.3 Arbitration status ... 440
6.14.4.4 Partial Pathway Timeout timer ... 440
6.14.4.5 Pathway recovery ... 441
6.14.5 BREAK handling ... 441
6.14.6 Aborting a connection request ... 442
6.14.7 Expander device request for an SSP connection close ... 444
6.14.8 Closing a connection ... 444
6.14.9 Breaking a connection ... 445
6.15 Rate matching ... 446
6.16 SL (link layer for SAS logical phys) state machines ... 449
6.16.1 SL state machines overview ... 449
6.16.2 SL transmitter and receiver ... 452
6.16.3 SL_RA (receive OPEN address frame) state machine ... 454
6.16.4 SL_CC (connection control) state machine ... 454
6.16.4.1 SL_CC state machine overview ... 454

Documents
Document Sharing Hub
Full document details: ISO IEC 14776-263-2018

6.16.4.2 SL_CC0:Idle state ... 456
6.16.4.2.1 State description ... 456
6.16.4.2.2 Transition SL_CC0:Idle to SL_CC1:ArbSel ... 458
6.16.4.2.3 Transition SL_CC0:Idle to SL_CC2:Selected ... 458
6.16.4.2.4 Transition SL_CC0:Idle to SL_CC8:PS_Request ... 459
6.16.4.2.5 Transition SL_CC0:Idle to SL_CC9:PS_Quiet ... 459
6.16.4.3 SL_CC1:ArbSel state ... 459
6.16.4.3.1 State description ... 459
6.16.4.3.2 Transition SL_CC1:ArbSel to SL_CC0:Idle ... 461
6.16.4.3.3 Transition SL_CC1:ArbSel to SL_CC2:Selected ... 461
6.16.4.3.4 Transition SL_CC1:ArbSel to SL_CC3:Connected ... 461
6.16.4.3.5 Transition SL_CC1:ArbSel to SL_CC5:BreakWait ... 462
6.16.4.3.6 Transition SL_CC1:ArbSel to SL_CC6:Break ... 462
6.16.4.4 SL_CC2:Selected state ... 462
6.16.4.4.1 State description ... 462
6.16.4.4.2 Transition SL_CC2:Selected to SL_CC0:Idle ... 463
6.16.4.4.3 Transition SL_CC2:Selected to SL_CC3:Connected ... 463
6.16.4.4.4 Transition SL_CC2:Selected to SL_CC5:BreakWait ... 463
6.16.4.4.5 Transition SL_CC2:Selected to SL_CC6:Break ... 464
6.16.4.5 SL_CC3:Connected state ... 464
6.16.4.5.1 State description ... 464
6.16.4.5.2 Transition SL_CC3:Connected to SL_CC4:DisconnectWait ... 464
6.16.4.5.3 Transition SL_CC3:Connected to SL_CC5:BreakWait ... 465
6.16.4.5.4 Transition SL_CC3:Connected to SL_CC6:Break ... 465
6.16.4.5.5 Transition SL_CC3:Connected to SL_CC7:CloseSTP ... 465
6.16.4.6 SL_CC4:DisconnectWait state ... 465
6.16.4.6.1 State description ... 465
6.16.4.6.2 Transition SL_CC4:DisconnectWait to SL_CC0:Idle ... 465
6.16.4.6.3 Transition SL_CC4:DisconnectWait to SL_CC5:BreakWait ... 466
6.16.4.6.4 Transition SL_CC4:DisconnectWait to SL_CC6:Break ... 466
6.16.4.7 SL_CC5:BreakWait state ... 466
6.16.4.7.1 State description ... 466
6.16.4.7.2 Transition SL_CC5:BreakWait to SL_CC0:Idle ... 466
6.16.4.8 SL_CC6:Break state ... 466
6.16.4.8.1 State description ... 466
6.16.4.8.2 Transition SL_CC6:Break to SL_CC0:Idle ... 467
6.16.4.9 SL_CC7:CloseSTP state ... 467
6.16.4.9.1 State description ... 467
6.16.4.9.2 Transition SL_CC7:CloseSTP to SL_CC0:Idle ... 467
6.16.4.10 SL_CC8:PS_Request state ... 467
6.16.4.10.1 State description ... 467
6.16.4.10.2 Transition SL_CC8:PS_Request to SL_CC9:PS_Quiet ... 468
6.16.4.10.3 Transition SL_CC8:PS_Request to SL_CC0:Idle ... 468
6.16.4.10.4 Transition SL_CC8:PS_Request to SL_CC2:Selected ... 469
6.16.4.11 SL_CC9:PS_Quiet state ... 469
6.16.4.11.1 State description ... 469
6.16.4.11.2 Transition SL_CC9:PS_Quiet to SL_CC0:Idle ... 469
6.16.4.11.3 Transition SL_CC9:PS_Quiet to SL_CC1:ArbSel ... 469
6.17 XL (link layer for expander logical phys) state machine ... 470
6.17.1 XL state machine overview ... 470
6.17.2 XL transmitter and receiver ... 476
6.17.3 XL0:Idle state ... 478
6.17.3.1 State description ... 478
6.17.3.2 Transition XL0:Idle to XL1:Request_Path ... 479
6.17.3.3 Transition XL0:Idle to XL5:Forward_Open ... 479
6.17.3.3.1 Transition XL0:Idle to XL11:PS_Request ... 479
6.17.3.3.2 Transition XL0:Idle to XL12:PS_Quiet ... 480

Documents
Document Sharing Hub
Full document details: ISO IEC 14776-263-2018

6.17.4 XL1:Request_Path state ... 480
6.17.4.1 State description ... 480
6.17.4.2 Transition XL1:Request_Path to XL0:Idle ... 481
6.17.4.3 Transition XL1:Request_Path to XL2:Request_Open ... 481
6.17.4.4 Transition XL1:Request_Path to XL4:Open_Reject ... 481
6.17.4.5 Transition XL1:Request_Path to XL5:Forward_Open ... 481
6.17.4.6 Transition XL1:Request_Path to XL9:Break ... 482
6.17.5 XL2:Request_Open state ... 482
6.17.5.1 State description ... 482
6.17.5.2 Transition XL2:Request_Open to XL3:Open_Confirm_Wait ... 482
6.17.6 XL3:Open_Confirm_Wait state ... 482
6.17.6.1 State description ... 482
6.17.6.2 Transition XL3:Open_Confirm_Wait to XL0:Idle ... 483
6.17.6.3 Transition XL3:Open_Confirm_Wait to XL1:Request_Path ... 483
6.17.6.4 Transition XL3:Open_Confirm_Wait to XL5:Forward_Open ... 483
6.17.6.5 Transition XL3:Open_Confirm_Wait to XL7:Connected ... 484
6.17.6.6 Transition XL3:Open_Confirm_Wait to XL9:Break ... 484
6.17.6.7 Transition XL3:Open_Confirm_Wait to XL10:Break_Wait ... 484
6.17.7 XL4:Open_Reject state ... 484
6.17.7.1 State description ... 484
6.17.7.2 Transition XL4:Open_Reject to XL0:Idle ... 484
6.17.7.3 Transition XL4:Open_Reject to XL5:Forward_Open ... 484
6.17.8 XL5:Forward_Open state ... 484
6.17.8.1 State description ... 484
6.17.8.2 Transition XL5:Forward_Open to XL6:Open_Response_Wait ... 485
6.17.9 XL6:Open_Response_Wait state ... 485
6.17.9.1 State description ... 485
6.17.9.2 Transition XL6:Open_Response_Wait to XL0:Idle ... 486
6.17.9.3 Transition XL6:Open_Response_Wait to XL1:Request_Path ... 486
6.17.9.4 Transition XL6:Open_Response_Wait to XL2:Request_Open ... 486
6.17.9.5 Transition XL6:Open_Response_Wait to XL7:Connected ... 487
6.17.9.6 Transition XL6:Open_Response_Wait to XL9:Break ... 487
6.17.9.7 Transition XL6:Open_Response_Wait to XL10:Break_Wait ... 487
6.17.10 XL7:Connected state ... 487
6.17.10.1 State description ... 487
6.17.10.2 Transition XL7:Connected to XL8:Close_Wait ... 488
6.17.10.3 Transition XL7:Connected to XL9:Break ... 488
6.17.10.4 Transition XL7:Connected to XL10:Break_Wait ... 488
6.17.11 XL8:Close_Wait state ... 489
6.17.11.1 State description ... 489
6.17.11.2 Transition XL8:Close_Wait to XL0:Idle ... 489
6.17.11.3 Transition XL8:Close_Wait to XL9:Break ... 489
6.17.11.4 Transition XL8:Close_Wait to XL10:Break_Wait ... 490
6.17.12 XL9:Break state ... 490
6.17.12.1 State description ... 490
6.17.12.2 Transition XL9:Break to XL0:Idle ... 490
6.17.13 XL10:Break_Wait state ... 490
6.17.13.1 State description ... 490
6.17.13.2 Transition XL10:Break_Wait to XL0:Idle ... 490
6.17.14 XL11:PS_Request state ... 490
6.17.14.1 State description ... 490
6.17.14.2 Transition XL11:PS_Request to XL12:PS_Quiet ... 491
6.17.14.3 Transition XL11:PS_Request to XL0:Idle ... 492
6.17.14.4 Transition XL11:PS_Request to XL1:Request_Path ... 492
6.17.15 XL12:PS_Quiet state ... 492
6.17.15.1 State description ... 492
6.17.15.2 Transition XL12:PS_Quiet to XL0:Idle ... 492

Documents
Document Sharing Hub
Full document details: ISO IEC 14776-263-2018

6.18 SSP link layer ... 493
6.18.1 Opening an SSP connection ... 493
6.18.2 Full duplex ... 493
6.18.3 SSP frame transmission and reception ... 494
6.18.4 SSP flow control ... 494
6.18.5 Extending an SSP connection with persistent connections ... 495
6.18.6 Interlocked frames ... 495
6.18.7 Breaking an SSP connection ... 497
6.18.8 Closing an SSP connection ... 498
6.18.9 SSP (link layer for SSP phys) state machines ... 499
6.18.9.1 SSP state machines overview ... 499
6.18.9.2 SSP transmitter and receiver ... 503
6.18.9.3 SSP_TIM (transmit interlocked frame monitor) state machine ... 505
6.18.9.4 SSP_TCM (transmit frame credit monitor) state machine ... 505
6.18.9.5 SSP_D (DONE control) state machine ... 506
6.18.9.6 SSP_TF (transmit frame control) state machine ... 507
6.18.9.6.1 SSP_TF state machine overview ... 507
6.18.9.6.2 SSP_TF1:Connected_Idle state ... 508
6.18.9.6.2.1 State description ... 508
6.18.9.6.2.2 Transition SSP_TF1:Connected_Idle to SSP_TF2:Tx_Wait ... 508
6.18.9.6.2.3 Transition SSP_TF1:Connected_Idle to SSP_TF4:Transmit_DONE ... 508
6.18.9.6.3 SSP_TF2:Tx_Wait state ... 508
6.18.9.6.3.1 State description ... 508
6.18.9.6.3.2 Transition SSP_TF2:Tx_Wait to SSP_TF3:Transmit_Frame ... 509
6.18.9.6.3.3 Transition SSP_TF2:Tx_Wait to SSP_TF4:Transmit_DONE ... 509
6.18.9.6.4 SSP_TF3:Transmit_Frame state ... 509
6.18.9.6.4.1 State description ... 509
6.18.9.6.4.2 Transition SSP_TF3:Transmit_Frame to SSP_TF1:Connected_Idle ... 509
6.18.9.6.5 SSP_TF4:Transmit_DONE state ... 510
6.18.9.7 SSP_RF (receive frame control) state machine ... 510
6.18.9.8 SSP_RCM (receive frame credit monitor) state machine ... 511
6.18.9.9 SSP_RIM (receive interlocked frame monitor) state machine ... 512
6.18.9.10 SSP_TC (transmit credit control) state machine ... 512
6.18.9.11 SSP_TAN (transmit ACK/NAK control) state machine ... 512
6.18.9.12 SSP_EM (establish and manage persistent connection) state machine ... 513
6.18.9.12.1 SSP_EM state machine overview ... 513
6.18.9.12.2 SSP_EM1:Establish state ... 513
6.18.9.12.3 Transition SSP_EM1:Establish to SSP_EM2:Manage ... 514
6.18.9.12.4 SSP_EM2:Manage ... 514
6.18.9.12.5 Transition SSP_EM2:Manage to SSP_EM1:Establish ... 514
6.19 STP link layer ... 515
6.19.1 STP frame transmission and reception ... 515
6.19.2 STP flow control ... 515
6.19.2.1 STP flow control overview ... 515
6.19.2.2 SATA frame buffering ... 515
6.19.2.3 STP flow control buffer size ... 516
6.19.2.4 STP flow control example ... 517
6.19.2.5 STP insufficient buffer support ... 519
6.19.3 Continued primitive sequence ... 519
6.19.4 Affiliations ... 520
6.19.5 Opening an STP connection ... 522
6.19.6 Closing an STP connection ... 525
6.19.7 STP connection management examples ... 525
6.19.8 STP (link layer for STP phys) state machines ... 528
6.19.9 SMP target port support ... 528
6.20 SMP link layer ... 528
6.20.1 SMP frame transmission and reception ... 528

Documents
Document Sharing Hub
Full document details: ISO IEC 14776-263-2018

6.20.2 SMP flow control ... 528
6.20.3 Opening an SMP connection ... 528
6.20.4 Closing an SMP connection ... 529
6.20.5 SMP (link layer for SMP phys) state machines ... 529
6.20.5.1 SMP state machines overview ... 529
6.20.5.2 SMP transmitter and receiver ... 529
6.20.5.3 SMP_IP (link layer for SMP initiator phys) state machine ... 530
6.20.5.3.1 SMP_IP state machine overview ... 530
6.20.5.3.2 SMP_IP1:Idle state ... 531
6.20.5.3.2.1 State description ... 531
6.20.5.3.2.2 Transition SMP_IP1:Idle to SMP_IP2:Transmit_Frame ... 531
6.20.5.3.3 SMP_IP2:Transmit_Frame state ... 531
6.20.5.3.3.1 State description ... 531
6.20.5.3.3.2 Transition SMP_IP2:Transmit_Frame to SMP_IP3:Receive_Frame ... 531
6.20.5.3.4 SMP_IP3:Receive_Frame state ... 531
6.20.5.4 SMP_TP (link layer for SMP target phys) state machine ... 532
6.20.5.4.1 SMP_TP state machine overview ... 532
6.20.5.4.2 SMP_TP1:Receive_Frame state ... 533
6.20.5.4.2.1 State description ... 533
6.20.5.4.2.2 Transition SMP_TP1:Receive_Frame to SMP_TP2:Transmit_Frame ... 534
6.20.5.4.3 SMP_TP2:Transmit_Frame state ... 534

7 Port layer ... 535
7.1 Port layer overview ... 535
7.2 PL (port layer) state machines ... 535
7.2.1 PL state machines overview ... 535
7.2.2 PL_OC (port layer overall control) state machine ... 537
7.2.2.1 PL_OC state machine overview ... 537
7.2.2.2 PL_OC1:Idle state ... 539
7.2.2.2.1 PL_OC1:Idle state description ... 539
7.2.2.2.2 Transition PL_OC1:Idle to PL_OC2:Overall_Control ... 540
7.2.2.3 PL_OC2:Overall_Control state ... 540
7.2.2.3.1 PL_OC2:Overall_Control state overview ... 540
7.2.2.3.2 PL_OC2: Non-connection specific confirmations and requests ... 540
7.2.2.3.2.1 PL_OC2: Transmit Frame request ... 540
7.2.2.3.2.2 PL_OC2: HARD_RESET Received confirmation ... 541
7.2.2.3.2.3 PL_OC2: Notify Received (Power Loss Expected) confirmation ... 541
7.2.2.3.2.4 PL_OC2: Phy Disabled confirmation ... 541
7.2.2.3.2.5 PL_OC2: Start I_T Nexus Loss Timer request ... 542
7.2.2.3.3 PL_OC2:Overall_Control state establishing connections ... 542
7.2.2.3.4 PL_OC2:Overall_Control state connection established ... 546
7.2.2.3.5 PL_OC2:Overall_Control state unable to establish a connection — Unable To Connect message ... 546
7.2.2.3.6 PL_OC2:Overall_Control state unable to establish a connection — Unable To Connect message - Retry Open message processed as an Unable To Connect message ... 546
7.2.2.3.7 PL_OC2:Overall_Control state unable to establish a connection — I_T Nexus Loss timer expires ... 547
7.2.2.3.8 PL_OC2:Overall_Control state - I_T nexus loss event ... 547
7.2.2.3.9 PL_OC2:Overall_Control state connection management ... 547
7.2.2.3.10 PL_OC2:Overall_Control state frame transmission ... 549
7.2.2.3.11 PL_OC2:Overall_Control state frame transmission cancellations ... 550
7.2.2.3.12 Transition PL_OC2:Overall_Control to PL_OC1:Idle ... 550
7.2.3 PL_PM (port layer phy manager) state machine ... 551
7.2.3.1 PL_PM state machine overview ... 551
7.2.3.2 PL_PM1:Idle state ... 554
7.2.3.2.1 PL_PM1:Idle state description ... 554
7.2.3.2.2 Transition PL_PM1:Idle to PL_PM2:Req_Wait ... 554

Documents
Document Sharing Hub
Full document details: ISO IEC 14776-263-2018

7.2.3.2.3 Transition PL_PM1:Idle to PL_PM3:Connected ... 554
7.2.3.3 PL_PM2:Req_Wait state ... 554
7.2.3.3.1 PL_PM2:Req_Wait state overview ... 554
7.2.3.3.2 PL_PM2:Req_Wait establishing a connection ... 554
7.2.3.3.3 PL_PM2:Req_Wait connection established ... 555
7.2.3.3.4 PL_PM2:Req_Wait unable to establish a connection ... 555
7.2.3.3.5 PL_PM2:Req_Wait connection management ... 557
7.2.3.3.6 Transition PL_PM2:Req_Wait to PL_PM1:Idle ... 557
7.2.3.3.7 Transition PL_PM2:Req_Wait to PL_PM3:Connected ... 557
7.2.3.3.8 Transition PL_PM2:Req_Wait to PL_PM4:Wait_For_Close ... 557
7.2.3.4 PL_PM3:Connected state ... 557
7.2.3.4.1 PL_PM3:Connected state description ... 557
7.2.3.4.2 Transition PL_PM3:Connected to PL_PM1:Idle ... 561
7.2.3.5 PL_PM4:Wait_For_Close state ... 561
7.2.3.5.1 PL_PM4:Wait_For_Close state description ... 561
7.2.3.5.2 Transition PL_PM4:Wait_For_Close to PL_PM1:Idle ... 561

8 Transport layer ... 562
8.1 Transport layer overview ... 562
8.2 SSP transport layer ... 563
8.2.1 SSP frame format ... 563
8.2.2 Information units ... 567
8.2.2.1 COMMAND frame - Command information unit ... 567
8.2.2.2 TASK frame - Task Management Function information unit ... 568
8.2.2.3 XFER_RDY frame - Transfer Ready information unit ... 571
8.2.2.4 DATA frame - Data information unit ... 572
8.2.2.5 RESPONSE frame - Response information unit ... 574
8.2.2.5.1 RESPONSE frame - Response information unit overview ... 574
8.2.2.5.2 Response information unit - NO_DATA format ... 575
8.2.2.5.3 Response information unit - RESPONSE_DATA format ... 575
8.2.2.5.4 Response information unit - SENSE_DATA format ... 576
8.2.3 Sequences of SSP frames ... 577
8.2.3.1 Sequences of SSP frames overview ... 577
8.2.3.2 Task management function sequence of SSP frames ... 578
8.2.3.3 Non-data command sequence of SSP frames ... 578
8.2.3.4 Write command sequence of SSP frames ... 579
8.2.3.5 Read command sequence of SSP frames ... 579
8.2.3.6 Bidirectional command sequence of SSP frames ... 580
8.2.4 SSP transport layer handling of link layer errors ... 580
8.2.4.1 SSP transport layer handling of link layer errors overview ... 580
8.2.4.2 COMMAND frame - handling of link layer errors ... 581
8.2.4.3 TASK frame - handling of link layer errors ... 582
8.2.4.4 XFER_RDY frame - handling of link layer errors ... 582
8.2.4.4.1 XFER_RDY frame overview ... 582
8.2.4.4.2 XFER_RDY frame with transport layer retries enabled ... 582
8.2.4.4.3 XFER_RDY frame with transport layer retries disabled ... 583
8.2.4.5 Read DATA frame - handling of link layer errors ... 583
8.2.4.5.1 Read DATA frame overview ... 583
8.2.4.5.2 Read DATA frame with transport layer retries enabled ... 583
8.2.4.5.3 Read DATA frame with transport layer retries disabled ... 584
8.2.4.6 Write DATA frame - handling of link layer errors ... 584
8.2.4.6.1 Write DATA frame overview ... 584
8.2.4.6.2 Write DATA frame with transport layer retries enabled ... 584
8.2.4.6.3 Write DATA frame with transport layer retries disabled ... 585
8.2.4.7 RESPONSE frame - handling of link layer errors ... 585
8.2.5 SSP transport layer error handling summary ... 585
8.2.5.1 SSP transport layer error handling summary introduction ... 585

Documents
Document Sharing Hub

Full document details: ISO IEC 14776-263-2018

8.2.5.2 SSP initiator port transport layer error handling summary ... 585
8.2.5.3 SSP target port transport layer error handling summary ... 586
8.2.6 ST (transport layer for SSP ports) state machines ... 587
8.2.6.1 ST state machines overview ... 587
8.2.6.2 ST_I (transport layer for SSP initiator ports) state machines ... 588
8.2.6.2.1 ST_I state machines overview ... 588
8.2.6.2.2 ST_IFR (initiator frame router) state machine ... 590
8.2.6.2.2.1 ST_IFR state machine overview ... 590
8.2.6.2.2.2 Processing transport protocol service requests ... 590
8.2.6.2.2.3 Processing Frame Received confirmations ... 591
8.2.6.2.2.4 Processing Transmission Complete and Reception Complete messages ... 592
8.2.6.2.2.5 Processing miscellaneous requests ... 593
8.2.6.2.3 ST_ITS (initiator transport server) state machine ... 594
8.2.6.2.3.1 ST_ITS state machine overview ... 594
8.2.6.2.3.2 ST_ITS1:Initiator_Start state ... 595
8.2.6.2.3.2.1 State description ... 595
8.2.6.2.3.2.2 Transition ST_ITS1:Initiator_Start to ST_ITS3:Prepare_Command ... 595
8.2.6.2.3.2.3 Transition ST_ITS1:Initiator_Start to ST_ITS4:Prepare_Task ... 595
8.2.6.2.3.3 ST_ITS2:Initiator_Send_Frame state ... 595
8.2.6.2.3.3.1 Transition ST_ITS2:Initiator_Send_Frame to ST_ITS1:Initiator_Start ... 599
8.2.6.2.3.3.2 Transition ST_ITS2:Initiator_Send_Frame to ST_ITS5:Prepare_Data_Out ... 599
8.2.6.2.3.3.3 Transition ST_ITS2:Initiator_Send_Frame to ST_ITS6:Receive_Data_In ... 600
8.2.6.2.3.4 ST_ITS3:Prepare_Command state ... 600
8.2.6.2.3.4.1 State description ... 600
8.2.6.2.3.4.2 Transition ST_ITS3:Prepare_Command to ST_ITS2:Initiator_Send_Frame ... 600
8.2.6.2.3.5 ST_ITS4:Prepare_Task state ... 601
8.2.6.2.3.5.1 State description ... 601
8.2.6.2.3.5.2 Transition ST_ITS4:Prepare_Task to ST_ITS2:Initiator_Send_Frame ... 601
8.2.6.2.3.6 ST_ITS5:Prepare_Data_Out state ... 601
8.2.6.2.3.6.1 State description ... 601
8.2.6.2.3.6.2 Transition ST_ITS5:Prepare_Data_Out to ST_ITS2:Intiator_Send_Frame ... 602
8.2.6.2.3.7 ST_ITS6:Receive_Data_In state ... 602
8.2.6.2.3.7.1 State description ... 602
8.2.6.2.3.7.2 Transition ST_ITS6:Receive_Data_In to ST_ITS1:Initiator_Start ... 604
8.2.6.2.3.7.3 Transition ST_ITS6:Receive_Data_In to ST_ITS2:Initiator_Send_Frame ... 604
8.2.6.3 ST_T (transport layer for SSP target ports) state machines ... 604
8.2.6.3.1 ST_T state machines overview ... 604
8.2.6.3.2 ST_TFR (target frame router) state machine ... 606
8.2.6.3.2.1 ST_TFR state machine overview ... 606
8.2.6.3.2.2 Processing Frame Received confirmations ... 606
8.2.6.3.2.3 Processing transport protocol service requests and responses ... 608
8.2.6.3.2.4 Processing miscellaneous requests and confirmations ... 612
8.2.6.3.3 ST_TTS (target transport server) state machine ... 612
8.2.6.3.3.1 ST_TTS state machine overview ... 612
8.2.6.3.3.2 ST_TTS1:Target_Start state ... 613
8.2.6.3.3.2.1 State description ... 613
8.2.6.3.3.2.2 Transition ST_TTS1:Target_Start to ST_TTS3:Prepare_Data_In ... 614
8.2.6.3.3.2.3 Transition ST_TTS1:Target_Start to ST_TTS4:Prepare_Xfer_Rdy ... 614
8.2.6.3.3.2.4 Transition ST_TTS1:Target_Start to ST_TTS5:Receive_Data_Out ... 614
8.2.6.3.3.2.5 Transition ST_TTS1:Target_Start to ST_TTS7:Prepare_Response ... 614
8.2.6.3.3.3 ST_TTS2:Target_Send_Frame state ... 614
8.2.6.3.3.3.1 State description ... 614
8.2.6.3.3.3.2 Transition ST_TTS2:Target_Send_Frame to ST_TTS1:Target_Start ... 618
8.2.6.3.3.3.3 Transition ST_TTS2:Target_Send_Frame to ST_TTS3:Prepare_Data_In ... 618
8.2.6.3.3.3.4 Transition ST_TTS2:Target_Send_Frame to ST_TTS5:Receive_Data_Out ... 618
8.2.6.3.3.4 ST_TTS3:Prepare_Data_In state ... 619
8.2.6.3.3.4.1 State description ... 619

Documents
Document Sharing Hub
Full document details: ISO IEC 14776-263-2018

8.2.6.3.3.4.2 Transition ST_TTS3:Prepare_Data_In to ST_TTS2:Target_Send_Frame 620
8.2.6.3.3.5 ST_TTS4:Prepare_Xfer_Rdy state 620
8.2.6.3.3.5.1 State description 620
8.2.6.3.3.5.2 Transition ST_TTS4:Prepare_Xfer_Rdy to ST_TTS2:Target_Send_Frame 621
8.2.6.3.3.6 ST_TTS5:Receive_Data_Out state 621
8.2.6.3.3.6.1 State description 621
8.2.6.3.3.6.2 Transition ST_TTS5:Receive_Data_Out to ST_TTS1:Target_Start 622
8.2.6.3.3.6.3 Transition ST_TTS5:Receive_Data_Out to ST_TTS4:Prepare_Xfer_Rdy 622
8.2.6.3.3.7 ST_TTS6:Prepare_Response state 623
8.2.6.3.3.7.1 State description 623
8.2.6.3.3.7.2 Transition ST_TTS6:Prepare_Response to ST_TTS2:Target_Send_Frame 624
8.3 STP transport layer 624
8.3.1 Initial FIS 624
8.3.2 BIST Activate FIS 625
8.3.3 TT (transport layer for STP ports) state machines 625
8.4 SMP transport layer 625
8.4.1 SMP transport layer overview 625
8.4.2 SMP_REQUEST frame 626
8.4.3 SMP_RESPONSE frame 626
8.4.4 Sequence of SMP frames 627
8.4.5 MT (transport layer for SMP ports) state machines 627
8.4.5.1 SMP transport layer state machines overview 627
8.4.5.2 MT_IP (transport layer for SMP initiator ports) state machine 627
8.4.5.2.1 MT_IP state machine overview 627
8.4.5.2.2 MT_IP1:Idle state 628
8.4.5.2.2.1 State description 628
8.4.5.2.2.2 Transition MT_IP1:Idle to MT_IP2:Send 628
8.4.5.2.3 MT_IP2:Send state 629
8.4.5.2.3.1 State description 629
8.4.5.2.3.2 Transition MT_IP2:Send to MT_IP1:Idle 629
8.4.5.2.3.3 Transition MT_IP2:Send to MT_IP3:Receive 629
8.4.5.2.4 MT_IP3:Receive state 629
8.4.5.2.4.1 State description 629
8.4.5.2.4.2 Transition MT_IP3:Receive to MT_IP1:Idle 629
8.4.5.3 MT_TP (transport layer for SMP target ports) state machine 630
8.4.5.3.1 MT_TP state machine overview 630
8.4.5.3.2 MT_TP1:Idle state 630
8.4.5.3.2.1 State description 630
8.4.5.3.2.2 Transition MT_TP1:Idle to MT_TP2:Respond 631
8.4.5.3.3 MT_TP2:Respond state 631
8.4.5.3.3.1 State description 631
8.4.5.3.3.2 Transition MT_TP2:Respond to MT_TP1:Idle 631

9 Application layer 632
9.1 Application layer overview 632
9.2 SCSI application layer 632
9.2.1 SCSI transport protocol services 632
9.2.1.1 SCSI transport protocol services overview 632
9.2.1.2 Send SCSI Command transport protocol service 634
9.2.1.3 SCSI Command Received transport protocol service 635
9.2.1.4 Send Command Complete transport protocol service 636
9.2.1.5 Command Complete Received transport protocol service 637
9.2.1.6 Send Data-In transport protocol service 638
9.2.1.7 Data-In Delivered transport protocol service 639
9.2.1.8 Receive Data-Out transport protocol service 639
9.2.1.9 Data-Out Received transport protocol service 640
9.2.1.10 Terminate Data Transfer transport protocol service 641

Documents
Document Sharing Hub

Full document details: ISO IEC 14776-263-2018

9.2.1.11 Data Transfer Terminated transport protocol service ... 641
9.2.1.12 Send Task Management Request transport protocol service ... 641
9.2.1.13 Task Management Request Received transport protocol service ... 642
9.2.1.14 Task Management Function Executed transport protocol service ... 643
9.2.1.15 Received Task Management Function Executed transport protocol service ... 644
9.2.2 SCSI application client error handling ... 645
9.2.3 SCSI device server error handling ... 646
9.2.3.1 SCSI Command Received () error handling ... 646
9.2.3.2 Data-Out Received () error handling ... 646
9.2.4 Task router and task manager error handling ... 647
9.2.5 SCSI transport protocol services for event notifications ... 647
9.2.6 SCSI commands ... 648
9.2.6.1 INQUIRY command ... 648
9.2.6.2 LOG SELECT and LOG SENSE commands ... 648
9.2.6.3 MODE SELECT and MODE SENSE commands ... 648
9.2.6.4 SEND DIAGNOSTIC and RECEIVE DIAGNOSTIC RESULTS commands ... 648
9.2.6.5 START STOP UNIT command ... 648
9.2.7 SCSI mode parameters ... 649
9.2.7.1 SCSI mode parameters overview ... 649
9.2.7.2 Disconnect-Reconnect mode page ... 649
9.2.7.2.1 Disconnect-Reconnect mode page overview ... 649
9.2.7.2.2 BUS INACTIVITY LIMIT field ... 651
9.2.7.2.3 CONNECT TIME LIMIT field ... 651
9.2.7.2.4 MAXIMUM BURST SIZE field ... 651
9.2.7.2.5 FIRST BURST SIZE field ... 652
9.2.7.3 Protocol Specific Logical Unit mode page ... 652
9.2.7.4 Protocol Specific Port mode page ... 653
9.2.7.5 Phy Control And Discover mode page ... 655
9.2.7.6 Shared Port Control mode page ... 659
9.2.7.7 Enhanced Phy Control mode page ... 660
9.2.8 SCSI log parameters ... 663
9.2.8.1 Protocol Specific Port log page ... 663
9.2.8.2 Protocol Specific Port log parameter for SAS target ports ... 665
9.2.9 SCSI diagnostic parameters ... 668
9.2.9.1 SCSI diagnostic parameters overview ... 668
9.2.9.2 Protocol Specific diagnostic page ... 669
9.2.9.3 Enclosure Control diagnostic page ... 675
9.2.9.4 Enclosure Status diagnostic page ... 675
9.2.9.5 Additional Element Status diagnostic page ... 676
9.2.10 SCSI power conditions ... 676
9.2.10.1 SCSI power conditions overview ... 676
9.2.10.2 SA_PC (SCSI application layer power condition) state machine ... 676
9.2.10.2.1 SA_PC state machine overview ... 676
9.2.10.2.2 SA_PC_0:Powered_On state ... 680
9.2.10.2.2.1 State description ... 680
9.2.10.2.2.2 Transition SA_PC_0:Powered_On to SA_PC_4:Active_Wait ... 680
9.2.10.2.2.3 Transition SA_PC_0:Powered_On to SA_PC_8:Stopped ... 680
9.2.10.2.3 SA_PC_1:Active state ... 680
9.2.10.2.3.1 State description ... 680
9.2.10.2.3.2 Transition SA_PC_1:Active to SA_PC_5:Wait_Idle ... 680
9.2.10.2.3.3 Transition SA_PC_1:Active to SA_PC_6:Wait_Standby ... 680
9.2.10.2.3.4 Transition SA_PC_1:Active to SA_PC_10:Wait_Stopped ... 680
9.2.10.2.4 SA_PC_2:Idle state ... 680
9.2.10.2.4.1 State description ... 680
9.2.10.2.4.2 Transition SA_PC_2:Idle to SA_PC_4:Active_Wait ... 680
9.2.10.2.4.3 Transition SA_PC_2:Idle to SA_PC_5:Wait_Idle ... 681
9.2.10.2.4.4 Transition SA_PC_2:Idle to SA_PC_6:Wait_Standby ... 681

Documents
Document Sharing Hub
Full document details: ISO IEC 14776-263-2018

9.2.10.2.4.5 Transition SA_PC_2:Idle to SA_PC_7:Idle_Wait ... 681
9.2.10.2.4.6 Transition SA_PC_2:Idle to SA_PC_10:Wait_Stopped ... 681
9.2.10.2.5 SA_PC_3:Standby state ... 681
9.2.10.2.5.1 State description ... 681
9.2.10.2.5.2 Transition SA_PC_3:Standby to SA_PC_4:Active_Wait ... 681
9.2.10.2.5.3 Transition SA_PC_3:Standby to SA_PC_6:Wait_Standby ... 681
9.2.10.2.5.4 Transition SA_PC_3:Standby to SA_PC_7:Idle_Wait ... 681
9.2.10.2.5.5 Transition SA_PC_3:Standby to SA_PC_9: Standby_Wait ... 681
9.2.10.2.5.6 Transition SA_PC_3:Standby to SA_PC_10:Wait_Stopped ... 682
9.2.10.2.6 SA_PC_4:Active_Wait state ... 682
9.2.10.2.6.1 State description ... 682
9.2.10.2.6.2 Transition SA_PC_4:Active_Wait to SA_PC_1:Active ... 684
9.2.10.2.7 SA_PC_5:Wait_Idle state ... 684
9.2.10.2.7.1 SA_PC_5:Wait_Idle state description ... 684
9.2.10.2.7.2 Transition SA_PC_5:Wait_Idle to SA_PC_2:Idle ... 684
9.2.10.2.8 SA_PC_6:Wait_Standby state ... 684
9.2.10.2.8.1 SA_PC_6:Wait_Standby state description ... 684
9.2.10.2.8.2 Transition SA_PC_6:Wait_Standby to SA_PC_3:Standby ... 684
9.2.10.2.9 SA_PC_7:Idle_Wait state ... 684
9.2.10.2.9.1 State description ... 684
9.2.10.2.9.2 Transition SA_PC_7:Idle_Wait to SA_PC_2:Idle ... 686
9.2.10.2.10 SA_PC_8:Stopped state ... 686
9.2.10.2.10.1 State description ... 686
9.2.10.2.10.2 Transition SA_PC_8:Stopped to SA_PC_4:Active_Wait ... 686
9.2.10.2.10.3 Transition SA_PC_8:Stopped to SA_PC_7:Idle_Wait ... 686
9.2.10.2.10.4 Transition SA_PC_8:Stopped to SA_PC_9:Standby_Wait ... 686
9.2.10.2.11 SA_PC_9:Standby_Wait state ... 686
9.2.10.2.11.1 SA_PC_9:Standby_Wait state description ... 686
9.2.10.2.11.2 Transition SA_PC_9:Standby_Wait to SA_PC_3:Standby ... 686
9.2.10.2.12 SA_PC_10:Wait_Stopped state ... 686
9.2.10.2.12.1 SA_PC_10:Wait_Stopped state description ... 686
9.2.10.2.12.2 Transition SA_PC_10:Wait_Stopped to SA_PC_8:Stopped ... 686
9.2.11 SCSI vital product data (VPD) ... 687
9.2.11.1 SCSI vital product data (VPD) overview ... 687
9.2.11.2 Device Identification VPD page ... 687
9.2.11.3 Protocol Specific Logical Unit Information VPD page ... 688
9.2.11.4 Protocol Specific Port Information VPD page ... 690
9.3 ATA application layer ... 693
9.4 Management application layer ... 693
9.4.1 READY LED signal behavior ... 693
9.4.2 Management protocol services ... 695
9.4.3 SMP functions ... 695
9.4.3.1 SMP functions overview ... 695
9.4.3.2 SMP function request frame format ... 698
9.4.3.2.1 SMP function request frame format overview ... 698
9.4.3.2.2 SMP FRAME TYPE field ... 698
9.4.3.2.3 FUNCTION field ... 698
9.4.3.2.4 ALLOCATED RESPONSE LENGTH field ... 698
9.4.3.2.5 REQUEST LENGTH field ... 699
9.4.3.2.6 Additional request bytes ... 699
9.4.3.2.7 CRC field ... 700
9.4.3.3 SMP function response frame format ... 700
9.4.3.3.1 SMP function response frame format overview ... 700
9.4.3.3.2 SMP FRAME TYPE field ... 701
9.4.3.3.3 FUNCTION field ... 701
9.4.3.3.4 FUNCTION RESULT field ... 701
9.4.3.3.5 RESPONSE LENGTH field ... 709

Documents
Document Sharing Hub
Full document details: ISO IEC 14776-263-2018

9.4.3.3.6 Additional response bytes ... 709
9.4.3.3.7 CRC field ... 710
9.4.3.4 REPORT GENERAL function ... 710
9.4.3.5 REPORT MANUFACTURER INFORMATION function ... 717
9.4.3.6 REPORT SELF-CONFIGURATION STATUS function ... 721
9.4.3.6.1 REPORT SELF-CONFIGURATION STATUS function overview ... 721
9.4.3.6.2 REPORT SELF-CONFIGURATION STATUS request ... 721
9.4.3.6.3 REPORT SELF-CONFIGURATION STATUS response ... 723
9.4.3.6.4 Self-configuration status descriptor ... 725
9.4.3.7 REPORT ZONE PERMISSION TABLE function ... 727
9.4.3.7.1 REPORT ZONE PERMISSION TABLE function overview ... 727
9.4.3.7.2 REPORT ZONE PERMISSION TABLE request ... 728
9.4.3.7.3 REPORT ZONE PERMISSION TABLE response ... 730
9.4.3.7.4 Zone permission descriptor ... 731
9.4.3.8 REPORT ZONE MANAGER PASSWORD function ... 732
9.4.3.9 REPORT BROADCAST function ... 735
9.4.3.9.1 REPORT BROADCAST function overview ... 735
9.4.3.9.2 REPORT BROADCAST request ... 735
9.4.3.9.3 REPORT BROADCAST response ... 737
9.4.3.9.4 Broadcast descriptor ... 738
9.4.3.10 DISCOVER function ... 740
9.4.3.11 REPORT PHY ERROR LOG function ... 758
9.4.3.12 REPORT PHY SATA function ... 761
9.4.3.13 REPORT ROUTE INFORMATION function ... 765
9.4.3.14 REPORT PHY EVENT function ... 768
9.4.3.14.1 REPORT PHY EVENT function overview ... 768
9.4.3.14.2 REPORT PHY EVENT request ... 769
9.4.3.14.3 REPORT PHY EVENT response ... 770
9.4.3.14.4 Phy event descriptor ... 771
9.4.3.15 DISCOVER LIST function ... 772
9.4.3.15.1 DISCOVER LIST function overview ... 772
9.4.3.15.2 DISCOVER LIST request ... 773
9.4.3.15.3 DISCOVER LIST response ... 775
9.4.3.15.4 DISCOVER LIST response SHORT FORMAT descriptor ... 777
9.4.3.16 REPORT PHY EVENT LIST function ... 778
9.4.3.16.1 REPORT PHY EVENT LIST function overview ... 778
9.4.3.16.2 REPORT PHY EVENT LIST request ... 778
9.4.3.16.3 REPORT PHY EVENT LIST response ... 779
9.4.3.16.4 Phy event list descriptor ... 781
9.4.3.17 REPORT EXPANDER ROUTE TABLE LIST function ... 781
9.4.3.17.1 REPORT EXPANDER ROUTE TABLE LIST function overview ... 781
9.4.3.17.2 REPORT EXPANDER ROUTE TABLE LIST request ... 782
9.4.3.17.3 REPORT EXPANDER ROUTE TABLE LIST response ... 784
9.4.3.17.4 Expander route table descriptor ... 786
9.4.3.18 CONFIGURE GENERAL function ... 786
9.4.3.19 ENABLE DISABLE ZONING function ... 790
9.4.3.20 ZONED BROADCAST function ... 793
9.4.3.21 ZONE LOCK function ... 796
9.4.3.22 ZONE ACTIVATE function ... 799
9.4.3.23 ZONE UNLOCK function ... 800
9.4.3.24 CONFIGURE ZONE MANAGER PASSWORD function ... 802
9.4.3.25 CONFIGURE ZONE PHY INFORMATION function ... 805
9.4.3.25.1 CONFIGURE ZONE PHY INFORMATION function overview ... 805
9.4.3.25.2 CONFIGURE ZONE PHY INFORMATION request ... 806
9.4.3.25.3 Zone phy configuration descriptor ... 808
9.4.3.25.4 CONFIGURE ZONE PHY INFORMATION response ... 808
9.4.3.26 CONFIGURE ZONE PERMISSION TABLE function ... 809

Documents
Document Sharing Hub

Full document details: ISO IEC 14776-263-2018

9.4.3.26.1 CONFIGURE ZONE PERMISSION TABLE function overview ... 809
9.4.3.26.2 CONFIGURE ZONE PERMISSION TABLE request ... 810
9.4.3.26.3 Zone permission configuration descriptor ... 812
9.4.3.26.4 CONFIGURE ZONE PERMISSION TABLE response ... 813
9.4.3.27 CONFIGURE ROUTE INFORMATION function ... 814
9.4.3.28 PHY CONTROL function ... 817
9.4.3.29 PHY TEST FUNCTION function ... 826
9.4.3.30 CONFIGURE PHY EVENT function ... 830
9.4.3.30.1 CONFIGURE PHY EVENT function overview ... 830
9.4.3.30.2 CONFIGURE PHY EVENT request ... 831
9.4.3.30.3 Phy event configuration descriptor ... 832
9.4.3.30.4 CONFIGURE PHY EVENT response ... 833

Annex A (normative) Jitter tolerance patterns ... 834
A.1 Jitter tolerance pattern (JTPAT) ... 834
A.2 Compliant jitter tolerance pattern (CJTPAT) ... 834
A.3 Considerations for a phy transmitting JTPAT and CJTPAT ... 842
A.4 Considerations for a phy receiving JTPAT and CJTPAT ... 842

Annex B (informative) SAS to SAS phy reset sequence examples ... 844

Annex C (informative) CRC ... 849
C.1 CRC generator and checker implementation examples ... 849
C.2 CRC implementation in C ... 849
C.3 CRC implementation with XORs ... 851
C.4 CRC examples ... 852

Annex D (informative) SAS address hashing ... 853
D.1 SAS address hashing overview ... 853
D.2 Hash collision probability ... 853
D.3 Hash generation ... 854
D.4 Hash implementation in C ... 854
D.5 Hash implementation with XORs ... 855
D.6 Hash examples ... 856

Annex E (informative) Scrambling ... 860
E.1 Scrambler implementation example ... 860
E.2 Scrambler implementation in C ... 860
E.3 Scrambler implementation with XORs ... 861
E.4 Scrambler examples ... 862

Annex F (informative) ATA architectural notes ... 865
F.1 STP differences from Serial ATA (SATA) ... 865
F.2 STP differences from Serial ATA II ... 865
F.3 Affiliation policies ... 865
F.3.1 Affiliation policies overview ... 865
F.3.2 Affiliation policy for static STP initiator port to STP target port mapping ... 866
F.3.3 Affiliation policy with SATA queued commands and multiple STP initiator ports ... 866
F.3.4 Applicability of affiliation for STP target ports ... 866
F.4 SATA port selector considerations ... 866
F.5 SATA device not transmitting initial Register Device-to-Host FIS ... 867

Annex G (informative) Minimum deletable primitive insertion rate summary ... 868

Annex H (informative) Zone permission configuration descriptor examples ... 869

Annex I (informative) SAS addressing ... 872

Documents
Document Sharing Hub

Full document details: ISO IEC 14776-263-2018

I.1 SAS addressing in SAS domains ... 872
I.2 Expander device SAS addresses ... 872

Annex J (informative) Expander device handling of connections ... 873
J.1 Expander device handling of connections overview ... 873
J.2 Connection request - OPEN_ACCEPT ... 875
J.3 Connection request - OPEN_REJECT by end device ... 876
J.4 Connection request - OPEN_REJECT by expander device ... 877
J.5 Connection request - arbitration lost ... 878
J.6 Connection request - backoff and retry ... 879
J.7 Connection request - backoff and reverse path ... 880
J.8 Connection close - single step ... 881
J.9 Connection close - simultaneous ... 882
J.10 BREAK handling during path arbitration when the BREAK_REPLY method is disabled ... 883
J.11 BREAK handling during connection when the BREAK_REPLY method is disabled ... 884
J.12 BREAK handling during path arbitration when the BREAK_REPLY method is enabled ... 885
J.13 BREAK handling during connection when BREAK_REPLY method is enabled ... 886
J.14 STP connection - originated by STP initiator port ... 887
J.15 STP connection - originated by STP target port in an STP SATA bridge ... 888
J.16 STP connection close - originated by STP initiator port ... 889
J.17 STP connection close - originated by STP target port in an STP SATA bridge ... 890
J.18 Connection request - XL1:Request_Path to XL5:Forward_Open transition ... 891
J.19 Pathway blocked and pathway recovery example ... 892

Annex K (informative) Primitive encoding ... 894

Annex L (informative) Standards bodies contact information ... 897

Annex M (informative) Successful low phy power condition handshake sequence ... 898

Bibliography ... 901

Documents
Document Sharing Hub

Full document details: ISO IEC 14776-263-2018

Table 1 — Numbering conventions ... 81
Table 2 — Comparison of decimal prefixes and binary prefixes ... 82
Table 3 — Constraint and note notation ... 83
Table 4 — Class diagram notation for classes ... 83
Table 5 — Multiplicity notation ... 84
Table 6 — Class diagram notation for associations ... 85
Table 7 — Class diagram notation for aggregations ... 86
Table 8 — Class diagram notation for generalizations ... 86
Table 9 — Class diagram notation for dependency ... 87
Table 10 — Object diagram notation for objects ... 88
Table 11 — Object diagram notation for link ... 88
Table 12 — Data dword containing a value ... 92
Table 13 — Data dword containing four one-byte fields ... 92
Table 14 — Logical links ... 100
Table 15 — Broadcast types ... 116
Table 16 — Names and identifiers ... 119
Table 17 — SCSI architecture model object attribute mapping ... 119
Table 18 — NAA IEEE Registered format ... 120
Table 19 — NAA Locally Assigned format ... 121
Table 20 — Hashed SAS address code parameters ... 122
Table 21 — Device name created from the IDENTIFY (PACKET) DEVICE world wide name ... 123
Table 22 — Expander logical phy to ECM requests ... 147
Table 23 — Expander logical phy to ECM responses ... 147
Table 24 — ECM to expander logical phy confirmations ... 148
Table 25 — Expander logical phy to ECR to expander logical phy requests and indications ... 149
Table 26 — Expander logical phy to ECR to expander logical phy responses and confirmations ... 149
Table 27 — Expander logical phy to BPP requests ... 151
Table 28 — BPP to expander logical phy indications ... 152
Table 29 — Routing attributes and routing methods ... 152
Table 30 — Expander route table types ... 154
Table 31 — Expander route table levels for externally configurable expander device R phy A ... 166
Table 32 — Expander route table levels for externally configurable expander device N ... 167
Table 33 — Expander route entries for externally configurable expander device E0 phy 1 ... 168
Table 34 — Expander route entries for externally configurable expander device F phy 0 ... 169
Table 35 — Zone manager password ... 174
Table 36 — Zone phy information ... 177
Table 37 — Zone phy information usage ... 178
Table 38 — Zone groups ... 179
Table 39 — Zone permission table ... 181
Table 40 — Zone permission table granting minimal permissions ... 182
Table 41 — Source zone group determination ... 184
Table 42 — Destination zone group determination ... 184
Table 43 — REQUESTED INSIDE ZPSDS bit and INSIDE ZPSDS PERSISTENT bit changes after a link reset sequence ... 185
Table 44 — ZONE GROUP field values if the ZONE GROUP PERSISTENT bit is set to one ... 186
Table 45 — Conditions that cause the ZONE GROUP field to be updated if the ZONE GROUP PERSISTENT bit is set to zero ... 187
Table 46 — PHY EVENT SOURCE field ... 196
Table 47 — Bit designations ... 202
Table 48 — Conversion from byte notation to character name example ... 203
Table 49 — Data characters ... 205
Table 50 — Control characters ... 210
Table 51 — Control character usage ... 211
Table 52 — Delayed code violation example ... 212
Table 53 — SNW-3 phy capabilities ... 218
Table 54 — Requested logical link rate ... 219
Table 55 — Multiplexing negotiation ... 220

Documents
Document Sharing Hub
Full document details: ISO IEC 14776-263-2018

Table 56 — Supported settings bit priorities ... 221
Table 57 — Example SNW-3 phy capabilities values ... 222
Table 58 — Train_Tx-SNW TTIU bit ... 225
Table 59 — Train_Tx-SNW TTIU ... 226
Table 60 — PATTERN TYPE field ... 226
Table 61 — Control/Status TTIU ... 227
Table 62 — COEFFICIENT SETTINGS field ... 227
Table 63 — COEFFICIENT 1 REQUEST field, COEFFICIENT 2 REQUEST field, and COEFFICIENT 3 REQUEST field 228
Table 64 — Valid coefficient requests ... 229
Table 65 — COEFFICIENT 1 STATUS field, COEFFICIENT 2 STATUS field, and COEFFICIENT 3 STATUS field ... 230
Table 66 — Error Response TTIU ... 230
Table 67 — ERROR CODE field ... 232
Table 68 — Phy reset sequence timing specifications ... 233
Table 69 — SATA speed negotiation sequence timing specifications ... 235
Table 70 — SAS speed negotiation sequence timing specifications ... 240
Table 71 — SNW rates used in SNW-1, SNW-2, and Final-SNW ... 243
Table 72 — SNW-3 phy capabilities bit ... 244
Table 73 — Transmitter training pattern ... 246
Table 74 — Receiver training patterns ... 249
Table 75 — SP state machine timers ... 280
Table 76 — Messages to SP transmitter and SP receiver at start of RCDT ... 292
Table 77 — SP_DWS state machine timers ... 313
Table 78 — Mapping messages to the Training Control word ... 329
Table 79 — Mapping messages from PTT_SC1 state machine, PTT_SC2 state machine, and PTT_SC3 state machine to the Training Status word ... 329
Table 80 — Mapping Transmit Error Response message arguments to Error Response TTIU fields ... 330
Table 81 — Transmit Error Response message arguments sent to PTT_T state machine ... 336
Table 82 — Mapping the Training Status word to SP receiver messages ... 337
Table 83 — Mapping the Training Status word to PTT_GC1 state machine messages, PTT_GC2 state machine messages, and PTT_GC3 state machine messages ... 338
Table 84 — Mapping the Training Control word to PTT_SC1 state machine messages, PTT_SC2 state machine messages, and PTT_SC3 state machine messages ... 339
Table 85 — Mapping Coefficient Request byte to PTT_SC3 state machine message, PTT_SC2 state machine message, and PTT_SC1 state machine messages ... 340
Table 86 — Mapping messages to the PTT_T state machine ... 344
Table 87 — PTT_SC1 messages to substitute for PTT_SC2 messages ... 345
Table 88 — PTT_SC1 messages to substitute for PTT_SC3 messages ... 346
Table 89 — Mapping messages to the PTT_T state machine ... 348
Table 90 — PTT_GC1 messages to substitute for PTT_GC2 messages ... 349
Table 91 — PTT_GC1 messages to substitute for PTT_GC2 messages ... 349
Table 92 — Primitive format ... 356
Table 93 — Deletable primitives ... 357
Table 94 — Primitives not specific to type of connection ... 358
Table 95 — Primitives used inside SSP and SMP connections ... 362
Table 96 — Primitives used inside STP connections and on SATA physical links ... 364
Table 97 — Primitive encoding for deletable primitives ... 366
Table 98 — Primitive encoding for primitives not specific to type of connection ... 367
Table 99 — Primitive encoding for primitives used only inside SSP and SMP connections ... 369
Table 100 — Primitive encoding for primitives used only inside STP connections and only on SATA physical links ... 370
Table 101 — Primitive sequences ... 371
Table 102 — ALIGN primitives ... 376
Table 103 — MUX primitives ... 377
Table 104 — NOTIFY primitives ... 377
Table 105 — AIP primitives ... 379
Table 106 — BROADCAST primitives ... 380
Table 107 — CLOSE primitives ... 381

Documents
Document Sharing Hub
Full document details: ISO IEC 14776-263-2018

Table 108 — Abandon-class OPEN_REJECT primitives ... 382
Table 109 — Retry-class OPEN_REJECT primitives ... 383
Table 110 — PS_REQ primitives ... 384
Table 111 — DONE primitives ... 386
Table 112 — NAK primitives ... 387
Table 113 — RRDY primitives ... 387
Table 114 — Physical link rate tolerance management deletable primitive insertion requirement ... 390
Table 115 — CRC notation and definitions ... 392
Table 116 — Scrambling for different data dword types ... 396
Table 117 — Address frame format ... 402
Table 118 — ADDRESS FRAME TYPE field ... 402
Table 119 — IDENTIFY address frame format ... 403
Table 120 — DEVICE TYPE field ... 404
Table 121 — REASON field ... 404
Table 122 — POWER CAPABLE field ... 406
Table 123 — OPEN address frame format ... 407
Table 124 — SAS PROTOCOL field ... 408
Table 125 — FEATURES field ... 408
Table 126 — CONNECTION RATE field ... 408
Table 127 — ARBITRATION WAIT TIME field ... 410
Table 128 — SL_IR_IRC state machine timers ... 414
Table 129 — PS_ACK pattern ... 421
Table 130 — SL_P_S state machine timers ... 423
Table 131 — SL_P_C state machine timers ... 427
Table 132 — Connection results of a connection request ... 435
Table 133 — Arbitration priority for OPEN address frames passing on a logical link ... 436
Table 134 — Arbitration priority for a Request Path request in the ECM ... 439
Table 135 — Pathway recovery priority ... 441
Table 136 — Results of aborting a connection request ... 442
Table 137 — Results of closing a connection ... 445
Table 138 — Results of breaking a connection ... 446
Table 139 — Rate matching deletable primitive insertion requirements ... 447
Table 140 — SL_CC state machine timers ... 456
Table 141 — SL_CC state machine variables ... 456
Table 142 — OPEN_REJECT Received message to Open Failed confirmation mapping ... 460
Table 143 — XL state machine timers ... 471
Table 144 — XL state machine variable ... 471
Table 145 — SSP frame interlock requirements ... 495
Table 146 — SSP state machines timers ... 500
Table 147 — SSP state machines timers for persistent connections ... 500
Table 148 — STP link layer differences from SATA link layer during an STP connection ... 515
Table 149 — Affiliation policies ... 521
Table 150 — Affiliation context relative identifier example ... 522
Table 151 — PL_OC state machine timers ... 538
Table 152 — Confirmations from Unable To Connect messages ... 546
Table 153 — PL_PM state machine timers ... 551
Table 154 — Messages from Open Failed confirmations ... 555
Table 155 — SSP frame format ... 563
Table 156 — FRAME TYPE field ... 564
Table 157 — TLR CONTROL field for COMMAND frames ... 565
Table 158 — COMMAND frame - Command information unit ... 567
Table 159 — TASK ATTRIBUTE field ... 568
Table 160 — TASK frame - Task Management Function information unit ... 569
Table 161 — TASK MANAGEMENT FUNCTION field ... 570
Table 162 — XFER_RDY frame - Transfer Ready information unit ... 572
Table 163 — DATA frame - Data information unit ... 573
Table 164 — RESPONSE frame - Response information unit ... 574

Documents
Document Sharing Hub

Full document details: ISO IEC 14776-263-2018

Table 165 — DATAPRES field ... 575
Table 166 — RESPONSE DATA field ... 576
Table 167 — RESPONSE CODE field ... 576
Table 168 — Sequences of SSP frames ... 577
Table 169 — Confirmations sent to the SCSI application layer if a frame transmission error or reception error occurs ... 593
Table 170 — ST_ITS state machine variables ... 594
Table 171 — ST_ITS state machine arguments ... 595
Table 172 — Messages sent to the ST_IFR state machine ... 597
Table 173 — Transmission Complete messages for XFER_RDY frame verification failures ... 598
Table 174 — Reception Complete messages for read DATA frame verification failures ... 603
Table 175 — ST_T state machine timers ... 604
Table 176 — Task Management Function Executed Service Response argument mapping to Request (Send Transport Response) Service Response argument ... 609
Table 177 — Confirmations sent to the SCSI application layer ... 611
Table 178 — ST_TTS state machine variables ... 613
Table 179 — ST_TTS state machine arguments ... 613
Table 180 — Messages sent to the ST_TFR state machine ... 617
Table 181 — Additional messages sent to the ST_TFR state machine ... 618
Table 182 — Reception Complete message for write DATA frame verification failures ... 621
Table 183 — Request (Send Transport Response) message Service Response argument to RESPONSE frame RESPONSE DATA field mapping ... 624
Table 184 — SMP frame format ... 625
Table 185 — SMP FRAME TYPE field ... 625
Table 186 — SMP_REQUEST frame format ... 626
Table 187 — SMP_RESPONSE frame format ... 626
Table 188 — MT_TP time limits ... 630
Table 189 — Execute Command procedure call transport protocol services ... 633
Table 190 — Task management function procedure call transport protocol services ... 634
Table 191 — Send SCSI Command transport protocol service arguments ... 635
Table 192 — SCSI Command Received transport protocol service arguments ... 636
Table 193 — Send Command Complete transport protocol service arguments ... 637
Table 194 — Command Complete Received transport protocol service arguments ... 638
Table 195 — Send Data-In transport protocol service arguments ... 639
Table 196 — Data-In Delivered transport protocol service arguments ... 639
Table 197 — Receive Data-Out transport protocol service arguments ... 640
Table 198 — Data-Out Received transport protocol service arguments ... 640
Table 199 — Terminate Data Transfer transport protocol service arguments ... 641
Table 200 — Data Transfer Terminated transport protocol service arguments ... 641
Table 201 — Send Task Management Request transport protocol service arguments ... 642
Table 202 — Task Management Request Received transport protocol service arguments ... 643
Table 203 — Task Management Function Executed transport protocol service arguments ... 644
Table 204 — Received Task Management Function Executed transport protocol service arguments ... 645
Table 205 — Delivery Result to additional sense code mapping ... 647
Table 206 — SCSI transport protocol events ... 648
Table 207 — SSP target port mode pages ... 649
Table 208 — Disconnect-Reconnect mode page for SAS SSP ... 650
Table 209 — Protocol Specific Logical Unit mode page for SAS SSP ... 653
Table 210 — Protocol Specific Port mode page for SAS SSP ... 654
Table 211 — I_T NEXUS LOSS TIME field ... 655
Table 212 — Phy Control And Discover mode page ... 656
Table 213 — SAS phy mode descriptor ... 658
Table 214 — Shared Port Control mode page ... 659
Table 215 — Enhanced Phy Control mode page ... 661
Table 216 — Enhanced phy control mode descriptor ... 662
Table 217 — Protocol Specific Port log parameters ... 663
Table 218 — Protocol Specific Port log page for SAS SSP ... 664

Documents
Document Sharing Hub
Full document details: ISO IEC 14776-263-2018

Table 219 — Protocol Specific Port log parameter for SAS target ports ... 665
Table 220 — SAS phy log descriptor ... 666
Table 221 — SSP target port diagnostic pages ... 668
Table 222 — Diagnostic pages affected by zoning ... 669
Table 223 — Protocol Specific diagnostic page for SAS SSP ... 670
Table 224 — PHY TEST FUNCTION field ... 671
Table 225 — PHY TEST PATTERN field ... 672
Table 226 — PHY TEST FUNCTION SSC field ... 673
Table 227 — PHY TEST FUNCTION PHYSICAL LINK RATE field ... 673
Table 228 — PHY TEST PATTERN DWORDS CONTROL field ... 674
Table 229 — TWO_DWORDS phy test pattern examples ... 675
Table 230 — Summary of states in the SA_PC state machine ... 677
Table 231 — VPD pages with special requirements for SAS SSP ... 687
Table 232 — Device Identification VPD page designation descriptors for the SAS target port ... 687
Table 233 — Device Identification VPD page designation descriptors for the SAS target device ... 688
Table 234 — Protocol Specific Logical Unit Information VPD page for SAS SSP ... 689
Table 235 — Logical unit information descriptor for SAS SSP ... 690
Table 236 — Protocol Specific Port Information VPD page for SAS SSP ... 691
Table 237 — Port information descriptor for SAS SSP ... 692
Table 238 — SAS phy information descriptor for SAS SSP ... 693
Table 239 — READY LED signal behavior ... 694
Table 240 — SMP functions (FUNCTION field) ... 695
Table 241 — SMP request frame format ... 698
Table 242 — SMP response frame format ... 700
Table 243 — FUNCTION RESULT field ... 701
Table 244 — Function result priority ... 705
Table 245 — REPORT GENERAL request ... 710
Table 246 — REPORT GENERAL response ... 711
Table 247 — NUMBER OF ZONE GROUPS field ... 715
Table 248 — REPORT MANUFACTURER INFORMATION request ... 717
Table 249 — REPORT MANUFACTURER INFORMATION response ... 719
Table 250 — REPORT SELF-CONFIGURATION STATUS request ... 721
Table 251 — REPORT SELF-CONFIGURATION STATUS response ... 723
Table 252 — Self-configuration status descriptor ... 725
Table 253 — STATUS TYPE field ... 725
Table 254 — REPORT ZONE PERMISSION TABLE request ... 728
Table 255 — REPORT TYPE field ... 729
Table 256 — REPORT ZONE PERMISSION TABLE response ... 730
Table 257 — Zone permission descriptors ... 731
Table 258 — Zone permission descriptor for a source zone group (i.e., s) with 128 zone groups ... 731
Table 259 — Zone permission descriptor for a source zone group (i.e., s) with 256 zone groups ... 732
Table 260 — Zone permission descriptor bit requirements ... 732
Table 261 — REPORT ZONE MANAGER PASSWORD request ... 733
Table 262 — REPORT TYPE field ... 734
Table 263 — REPORT ZONE MANAGER PASSWORD response ... 734
Table 264 — REPORT BROADCAST request ... 735
Table 265 — REPORT BROADCAST response ... 737
Table 266 — Broadcast descriptor ... 738
Table 267 — BROADCAST REASON field for originated Broadcasts ... 739
Table 268 — DISCOVER request ... 740
Table 269 — DISCOVER response ... 741
Table 270 — ATTACHED DEVICE TYPE field ... 744
Table 271 — NEGOTIATED LOGICAL LINK RATE field and NEGOTIATED PHYSICAL LINK RATE field ... 746
Table 272 — NEGOTIATED PHYSICAL LINK RATE field and NEGOTIATED LOGICAL LINK RATE field combinations based on multiplexing ... 747
Table 273 — ATTACHED SATA PORT SELECTOR and ATTACHED SATA DEVICE bits ... 748
Table 274 — PROGRAMMED MINIMUM PHYSICAL LINK RATE field and PROGRAMMED MAXIMUM PHYSICAL

Documents
Document Sharing Hub
Full document details: ISO IEC 14776-263-2018

LINK RATE field ... 751
Table 275 — The HARDWARE MINIMUM PHYSICAL LINK RATE field and the HARDWARE MAXIMUM PHYSICAL LINK RATE field ... 751
Table 276 — ROUTING ATTRIBUTE field ... 752
Table 277 — PHY POWER CONDITION field ... 753
Table 278 — SAS POWER CAPABLE field ... 753
Table 279 — PWR_DIS SIGNAL field ... 754
Table 280 — PWR_DIS CONTROL CAPABLE field ... 754
Table 281 — ATTACHED DEVICE NAME field ... 755
Table 282 — SELF-CONFIGURATION STATUS field ... 756
Table 283 — SELF-CONFIGURATION LEVELS COMPLETED field ... 756
Table 284 — REPORT PHY ERROR LOG request ... 759
Table 285 — REPORT PHY ERROR LOG response ... 760
Table 286 — REPORT PHY SATA request ... 762
Table 287 — REPORT PHY SATA response ... 763
Table 288 — REPORT ROUTE INFORMATION request ... 765
Table 289 — REPORT ROUTE INFORMATION response ... 767
Table 290 — REPORT PHY EVENT request ... 769
Table 291 — REPORT PHY EVENT response ... 770
Table 292 — Phy event descriptor ... 771
Table 293 — DISCOVER LIST request ... 773
Table 294 — PHY FILTER field ... 774
Table 295 — DESCRIPTOR TYPE field ... 774
Table 296 — DISCOVER LIST response ... 775
Table 297 — SHORT FORMAT descriptor ... 777
Table 298 — REPORT PHY EVENT LIST request ... 778
Table 299 — REPORT PHY EVENT LIST response ... 779
Table 300 — Phy event list descriptor ... 781
Table 301 — REPORT EXPANDER ROUTE TABLE LIST request ... 782
Table 302 — REPORT EXPANDER ROUTE TABLE LIST response ... 784
Table 303 — Expander route table descriptor ... 786
Table 304 — CONFIGURE GENERAL request ... 787
Table 305 — STP SMP I_T NEXUS LOSS TIME field ... 789
Table 306 — CONFIGURE GENERAL response ... 790
Table 307 — ENABLE DISABLE ZONING request ... 791
Table 308 — SAVE field ... 792
Table 309 — ENABLE DISABLE ZONING field ... 792
Table 310 — ENABLE DISABLE ZONING response ... 793
Table 311 — ZONED BROADCAST request ... 794
Table 312 — BROADCAST TYPE field ... 795
Table 313 — ZONED BROADCAST response ... 796
Table 314 — ZONE LOCK request ... 797
Table 315 — ZONE LOCK response ... 798
Table 316 — ZONE ACTIVATE request ... 799
Table 317 — ZONE ACTIVATE response ... 800
Table 318 — ZONE UNLOCK request ... 801
Table 319 — ZONE UNLOCK response ... 802
Table 320 — CONFIGURE ZONE MANAGER PASSWORD request ... 803
Table 321 — SAVE field ... 804
Table 322 — CONFIGURE ZONE MANAGER PASSWORD response ... 804
Table 323 — CONFIGURE ZONE PHY INFORMATION request ... 806
Table 324 — SAVE field ... 807
Table 325 — Zone phy configuration descriptor ... 808
Table 326 — CONFIGURE ZONE PHY INFORMATION response ... 808
Table 327 — CONFIGURE ZONE PERMISSION TABLE request ... 810
Table 328 — NUMBER OF ZONE GROUPS field ... 811
Table 329 — SAVE field ... 811

Documents
Document Sharing Hub
Full document details: ISO IEC 14776-263-2018

Table 330 — Zone permission configuration descriptors ... 812
Table 331 — Zone permission configuration descriptor for source zone group for 128 zone groups ... 812
Table 332 — Zone permission configuration descriptor for source zone group for 256 zone groups ... 812
Table 333 — Zone permission configuration descriptor bit requirements ... 813
Table 334 — CONFIGURE ZONE PERMISSION TABLE response ... 813
Table 335 — CONFIGURE ROUTE INFORMATION request ... 815
Table 336 — CONFIGURE ROUTE INFORMATION response ... 816
Table 337 — PHY CONTROL request ... 818
Table 338 — PHY OPERATION field ... 820
Table 339 — PROGRAMMED MINIMUM PHYSICAL LINK RATE field and PROGRAMMED MAXIMUM PHYSICAL LINK RATE field ... 822
Table 340 — ENABLE SAS SLUMBER field ... 823
Table 341 — ENABLE SAS PARTIAL field ... 823
Table 342 — ENABLE SATA SLUMBER field ... 824
Table 343 — ENABLE SATA PARTIAL field ... 824
Table 344 — PWR_DIS CONTROL field ... 825
Table 345 — PHY CONTROL response ... 825
Table 346 — PHY TEST FUNCTION request ... 827
Table 347 — PHY TEST FUNCTION field ... 829
Table 348 — PHY TEST FUNCTION PHYSICAL LINK RATE field ... 829
Table 349 — PHY TEST FUNCTION response ... 830
Table 350 — CONFIGURE PHY EVENT request ... 831
Table 351 — Phy event configuration descriptor ... 832
Table 352 — CONFIGURE PHY EVENT response ... 833
Table A.1 — JTPAT for RD+ and RD- ... 834
Table A.2 — CJTPAT ... 836
Table A.3 — CJTPAT with fixed content ... 841
Table C.1 — CRC examples ... 852
Table D.1 — Monte-Carlo simulation results ... 854
Table D.2 — Hash results for simple SAS addresses ... 856
Table D.3 — Hash results for realistic SAS addresses ... 856
Table D.4 — Hash results for a walking ones pattern ... 857
Table D.5 — Hash results for a walking zeros pattern ... 858
Table E.1 — Scrambler examples ... 862
Table E.2 — Initial scrambler output ... 863
Table G.1 — Minimum deletable primitive insertion rate examples ... 868
Table H.1 — Zone permission table example initial value ... 869
Table H.2 — CONFIGURE ZONE PERMISSION TABLE request example ... 869
Table H.3 — Zone permission table after processing first zone permission configuration descriptor ... 870
Table H.4 — Zone permission table after processing second zone permission configuration descriptor ... 871
Table J.1 — Column descriptions for connection examples ... 873
Table K.1 — Primitives with Hamming distance of at least 7 ... 894
Table K.2 — Primitives without Hamming distance of 7 ... 896
Table L.1 — Standards bodies ... 897

Documents
Document Sharing Hub
Full document details: ISO IEC 14776-263-2018

Figure 1 — Organization of this document ... 41
Figure 2 — SCSI document relationships ... 42
Figure 3 — ATA document relationships ... 42
Figure 4 — Examples of association relationships in class diagrams ... 85
Figure 5 — Examples of aggregation relationships in class diagrams ... 86
Figure 6 — Example of generalization relationships in class diagrams ... 87
Figure 7 — Example of a dependency relationship in class diagrams ... 87
Figure 8 — Examples of link relationships for object diagrams ... 89
Figure 9 — State machine conventions ... 90
Figure 10 — SAS Domain class diagram ... 95
Figure 11 — Phy class diagram ... 97
Figure 12 — SAS phy object diagram ... 98
Figure 13 — Expander phy object diagram ... 99
Figure 14 — Ports (narrow ports and wide ports) ... 101
Figure 15 — Port class diagram ... 102
Figure 16 — Port object diagram ... 103
Figure 17 — SAS devices ... 105
Figure 18 — Expander device ... 106
Figure 19 — Domains ... 107
Figure 20 — SAS domain bridging to ATA domains ... 108
Figure 21 — SAS domains bridging to ATA domains with SATA port selectors ... 109
Figure 22 — Devices spanning SAS domains ... 110
Figure 23 — Single expander device topology example ... 111
Figure 24 — Multiple expander device topologies and routing methods ... 112
Figure 25 — Potential pathways ... 113
Figure 26 — Multiple connections on wide ports ... 115
Figure 27 — State machines for SAS devices ... 125
Figure 28 — State machines for expander devices ... 126
Figure 29 — Transmit data path in a SAS phy ... 127
Figure 30 — SSP link, port, SSP transport, and SCSI application layer state machines ... 128
Figure 31 — SMP link, port, SMP transport, and management application layer state machines ... 129
Figure 32 — STP link, port, STP transport, and ATA application layer state machines ... 130
Figure 33 — Transmit data path and state machines in an expander phy ... 131
Figure 34 — Receive data path in a SAS phy ... 133
Figure 35 — Receive data path in an expander phy ... 134
Figure 36 — State machines and SAS Device classes ... 135
Figure 37 — State machines and Expander Device classes ... 136
Figure 38 — Reset terminology ... 138
Figure 39 — Expander device model ... 142
Figure 40 — Expander device interfaces ... 145
Figure 41 — Expander device interface detail ... 146
Figure 42 — Phy-based expander route table ... 154
Figure 43 — Expander-based expander route table ... 155
Figure 44 — Level-order traversal example ... 158
Figure 45 — Examples of invalid topologies ... 162
Figure 46 — Externally configurable expander device and table-to-table attachment ... 165
Figure 47 — Expander route index levels example ... 166
Figure 48 — Expander route index order example ... 168
Figure 49 — Zoning example ... 170
Figure 50 — One ZPSDS example ... 171
Figure 51 — Zone manager location examples ... 172
Figure 52 — Three ZPSDSes example ... 173
Figure 53 — Extending a ZPSDS example ... 175
Figure 54 — Overtaking a ZPSDS example ... 176
Figure 55 — Zoning expander route table ... 183
Figure 56 — SAS bit transmission logic ... 213
Figure 57 — SAS bit reception logic ... 214

Documents
Document Sharing Hub

Full document details: ISO IEC 14776-263-2018

Figure 58 — OOB signal transmission 215
Figure 59 — OOB signal detection 217
Figure 60 — TTIU transmitter BMC encoding 223
Figure 61 — TTIU bit cell transmitter encoding 224
Figure 62 — TTIU bit cell receiver decoding 225
Figure 63 — SATA OOB sequence 234
Figure 64 — SATA speed negotiation sequence 234
Figure 65 — SAS to SATA OOB sequence 236
Figure 66 — SAS to SAS OOB sequence 238
Figure 67 — SNW-1, SNW-2, and Final-SNW 242
Figure 68 — SNW-3 244
Figure 69 — Train_Tx-SNW 245
Figure 70 — Pattern marker transmission 247
Figure 71 — Valid pattern marker detection 248
Figure 72 — Train_Rx-SNW 249
Figure 73 — SAS speed negotiation sequence SNW flowchart 251
Figure 74 — SAS speed negotiation sequence (both phys SNW-1 through Train_Rx-SNW with no Train_Tx-SNW) 253
Figure 75 — SAS speed negotiation sequence (both phys SNW-1 through Train_Rx-SNW with Train_Tx-SNW) 254
Figure 76 — SAS speed negotiation sequence (phy A: SNW-1 through SNW-3, phy B: SNW-2 only) 255
Figure 77 — SAS speed negotiation sequence (phy A: SNW-3 only, phy B: SNW-1 only) 256
Figure 78 — SAS speed negotiation sequence - phy reset problem in Final-SNW 257
Figure 79 — SAS speed negotiation sequence - phy reset problem in SNW-3 258
Figure 80 — SAS speed negotiation sequence - phy reset problem in Train_Rx-SNW 259
Figure 81 — SAS speed negotiation sequence - multiple Train_Rx-SNWs 260
Figure 82 — Local phy achieves pattern lock before the attached phy achieves pattern lock 262
Figure 83 — Local phy achieves pattern lock after the attached phy achieves pattern lock 263
Figure 84 — Attached receiver handshake sequence (requesting two increments to coefficient 1) 265
Figure 85 — Attached receiver handshake sequence (requesting a decrement and an increment to coefficient 1) 266
Figure 86 — Handshake sequence to set local phy's receiver coefficients to no_equalization values (attached phy) 268
Figure 87 — Handshake sequence to set local phy's receiver coefficients to no_equalization values (local phy) 269
Figure 88 — Local phy's receiver indicates completion of training before the attached phy's receiver completes training 270
Figure 89 — Attached phy's receiver indicates completion of training before the local phy's receiver completes training 271
Figure 90 — Processing an invalid TTIU 273
Figure 91 — Hot-plug and the phy reset sequence 275
Figure 92 — Transition to active phy power condition 276
Figure 93 — Hot plug and low phy power condition 277
Figure 94 — SP (phy layer) state machine - OOB sequence states 283
Figure 95 — SP (phy layer) state machine - SAS speed negotiation states 290
Figure 96 — SP (phy layer) state machine - SAS speed negotiation states for SNW-3 and Train_Rx-SNW and Train_Tx-SNW 291
Figure 97 — SP (phy layer) state machine - SAS phy power condition states 303
Figure 98 — SP (phy layer) state machine - SATA host emulation states 306
Figure 99 — SP (phy layer) state machine – SATA port selector state 311
Figure 100 — SP (phy layer) state machine - SATA spinup hold state 312
Figure 101 — SP_DWS (phy layer dword synchronization) state machine 314
Figure 102 — PTT_T (phy layer transmitter training transmit pattern) state machine 326
Figure 103 — PTT_R (phy layer transmitter training receive pattern) state machine 334
Figure 104 — PTT_SC1, PTT_SC2, and PTT_SC3 (phy layer transmitter training set transmitter coefficient) state machines 342
Figure 105 — PTT_GC1, PTT_GC2, and PTT_GC3 (phy layer transmitter training get transmitter

Documents
Document Sharing Hub
Full document details: ISO IEC 14776-263-2018

coefficient) state machines 347
Figure 106 — PTT_PL (phy layer transmitter training pattern lock) state machine 351
Figure 107 — Multiplexing disabled 354
Figure 108 — Multiplexing enabled 355
Figure 109 — Transmitting a repeated primitive sequence 372
Figure 110 — Receiving a repeated primitive sequence 372
Figure 111 — Extended primitive sequences 373
Figure 112 — Triple primitive sequences 374
Figure 113 — Redundant primitive sequences 375
Figure 114 — Elasticity buffer 389
Figure 115 — Address frame, SSP frame, and SMP frame CRC bit ordering 394
Figure 116 — STP frame CRC bit ordering 395
Figure 117 — Transmit path bit ordering 398
Figure 118 — Receive path bit ordering 399
Figure 119 — STP transmit path bit ordering 400
Figure 120 — STP receive path bit ordering 401
Figure 121 — Address frame transmission 402
Figure 122 — Identification sequence 412
Figure 123 — Hard reset sequence 413
Figure 124 — SL_IR (link layer identification and hard reset) state machines 415
Figure 125 — Transitioning from the active phy power condition to a low phy power condition 421
Figure 126 — SL_P_S (link layer power source device) state machine 424
Figure 127 — SL_P_C (link layer power consumer device) state machine 428
Figure 128 — Example simultaneous connection recommendations for wide ports 434
Figure 129 — Aborting a connection request with a BREAK primitive sequence 443
Figure 130 — Connection request timeout example 444
Figure 131 — Closing a connection example 445
Figure 132 — Rate matching example 448
Figure 133 — SL (link layer for SAS logical phys) state machines (part 1) 450
Figure 134 — SL (link layer for SAS logical phys) state machines (part 2) 451
Figure 135 — SL (link layer for SAS logical phys) state machines (part 3) 452
Figure 136 — XL (link layer for expander logical phys) state machine (part 1) 472
Figure 137 — XL (link layer for expander logical phys) state machine (part 2) 473
Figure 138 — XL (link layer for expander logical phys) state machine (part 3) 474
Figure 139 — XL (link layer for expander logical phys) state machine (part 4) 475
Figure 140 — SSP frame transmission 494
Figure 141 — Interlocked frames 496
Figure 142 — Non-interlocked frames with the same initiator port transfer tags 497
Figure 143 — Non-interlocked frames with different initiator port transfer tags 497
Figure 144 — Closing an SSP connection example 499
Figure 145 — SSP (link layer for SSP phys) state machines (part 1 - frame transmission) 501
Figure 146 — SSP (link layer for SSP phys) state machines (part 2 - frame reception) 502
Figure 147 — SSP (link layer for SSP phys) state machines (part 3 - persistent connection) 503
Figure 148 — STP frame transmission 515
Figure 149 — STP flow control 518
Figure 150 — Transmitting a continued primitive sequence 520
Figure 151 — Receiving a continued primitive sequence 520
Figure 152 — Example simultaneous connection recommendations for an expander device 524
Figure 153 — STP initiator port opening an STP connection 526
Figure 154 — STP target port opening an STP connection 527
Figure 155 — SMP frame transmission 528
Figure 156 — SMP_IP (link layer for SMP initiator phys) state machine 530
Figure 157 — SMP_TP (link layer for SMP target phys) state machine 533
Figure 158 — Port layer examples 536
Figure 159 — PL_OC (port layer overall control) state machine 539
Figure 160 — PL_PM (port layer phy manager) state machine (part 1) 552
Figure 161 — PL_PM (port layer phy manager) state machine (part 2) 553

Documents
Document Sharing Hub

Full document details: ISO IEC 14776-263-2018

Figure 162 — Task management function sequence of SSP frames ... 578
Figure 163 — Non-data command sequence of SSP frames ... 578
Figure 164 — Write command sequence of SSP frames ... 579
Figure 165 — Read command sequence of SSP frames ... 579
Figure 166 — Bidirectional command sequence of SSP frames ... 580
Figure 167 — ST_I (transport layer for SSP initiator ports) state machines ... 589
Figure 168 — ST_T (transport layer for SSP target ports) state machines ... 605
Figure 169 — Sequence of SMP frames ... 627
Figure 170 — MT_IP (transport layer for SMP initiator ports) state machine ... 628
Figure 171 — MT_TP (transport layer for SMP target ports) state machine ... 630
Figure 172 — SA_PC (SCSI application layer power condition) state machine for SAS ... 679
Figure A.1 — CJTPAT pre-scrambling ... 835
Figure B.1 — SAS speed negotiation sequence (phy A: SNW-1 only, phy B: SNW-1 only) ... 844
Figure B.2 — SAS speed negotiation sequence (phy A: SNW-1, SNW-2, phy B: SNW-1, SNW-2) ... 845
Figure B.3 — SAS speed negotiation sequence (phy A: SNW-1, SNW-2, and SNW-3, phy B: SNW-1 and SNW-2) ... 846
Figure B.4 — SAS speed negotiation sequence (phy A: SNW-2, SNW-3, phy B: SNW-1, SNW-2) ... 847
Figure B.5 — SAS speed negotiation sequence (phy A: SNW-1 only, phy B: SNW-2 only) ... 848
Figure C.1 — CRC generator example ... 849
Figure C.2 — CRC checker example ... 849
Figure D.1 — BCH(69, 39, 9) code generator ... 854
Figure E.1 — Scrambler ... 860
Figure J.1 — Example topology ... 873
Figure J.2 — Connection request - OPEN_ACCEPT ... 875
Figure J.3 — Connection request - OPEN_REJECT by end device ... 876
Figure J.4 — Connection request - OPEN_REJECT by expander device ... 877
Figure J.5 — Connection request - arbitration lost ... 878
Figure J.6 — Connection request - backoff and retry ... 879
Figure J.7 — Connection request - backoff and reverse path ... 880
Figure J.8 — Connection close - single step ... 881
Figure J.9 — Connection close - simultaneous ... 882
Figure J.10 — BREAK handling during path arbitration when the BREAK_REPLY method is disabled ... 883
Figure J.11 — BREAK handling during a connection when the BREAK_REPLY method is disabled ... 884
Figure J.12 — BREAK handling during path arbitration when the BREAK_REPLY method is enabled ... 885
Figure J.13 — BREAK handling during a connection when the BREAK_REPLY method is enabled ... 886
Figure J.14 — STP connection - originated by STP initiator port ... 887
Figure J.15 — STP connection - originated by STP target port in an STP SATA bridge ... 888
Figure J.16 — STP connection close - originated by STP initiator port ... 889
Figure J.17 — STP connection close - originated by STP target port in an STP SATA bridge ... 890
Figure J.18 — XL1:Request_Path to XL5:Forward_Open transition ... 891
Figure J.19 — Partial pathway recovery ... 892
Figure M.1 — Example of a requesting SAS device's sequencing of a successful request for entering a partial phy power condition ... 899
Figure M.2 — Example of a SAS device's sequencing for a successful request to enter a partial phy power condition ... 900

Documents
Document Sharing Hub
Full document details: ISO IEC 14776-263-2018

INFORMATION TECHNOLOGY – SMALL COMPUTER SYSTEM INTERFACE (SCSI) –

Part 263: SAS Protocol Layer - 3 (SPL-3)

FOREWORD

1) ISO (the International Organization for Standardization) and IEC (the International Electrotechnical Commission) form the specialized system for worldwide standardization. National bodies that are members of ISO or IEC participate in the development of International Standards through technical committees established by the respective organization to deal with particular fields of technical activity. ISO and IEC technical committees collaborate in fields of mutual interest. Other international organizations, governmental and non-governmental, in liaison with ISO and IEC, also take part in the work. In the field of information technology, ISO and IEC have established a joint technical committee, ISO/IEC JTC 1.
2) The formal decisions or agreements of IEC and ISO on technical matters express, as nearly as possible, an international consensus of opinion on the relevant subjects since each technical committee has representation from all interested IEC National Committees and ISO member bodies.
3) IEC, ISO and ISO/IEC publications have the form of recommendations for international use and are accepted by IEC National Committees and ISO member bodies in that sense. While all reasonable efforts are made to ensure that the technical content of IEC, ISO and ISO/IEC publications is accurate, IEC or ISO cannot be held responsible for the way in which they are used or for any misinterpretation by any end user.
4) In order to promote international uniformity, IEC National Committees and ISO member bodies undertake to apply IEC, ISO and ISO/IEC publications transparently to the maximum extent possible in their national and regional publications. Any divergence between any ISO, IEC or ISO/IEC publication and the corresponding national or regional publication should be clearly indicated in the latter.
5) ISO and IEC do not provide any attestation of conformity. Independent certification bodies provide conformity assessment services and, in some areas, access to IEC marks of conformity. ISO or IEC are not responsible for any services carried out by independent certification bodies.
6) All users should ensure that they have the latest edition of this publication.
7) No liability shall attach to IEC or ISO or its directors, employees, servants or agents including individual experts and members of their technical committees and IEC National Committees or ISO member bodies for any personal injury, property damage or other damage of any nature whatsoever, whether direct or indirect, or for costs (including legal fees) and expenses arising out of the publication of, use of, or reliance upon, this ISO/IEC publication or any other IEC, ISO or ISO/IEC publications.
8) Attention is drawn to the normative references cited in this publication. Use of the referenced publications is indispensable for the correct application of this publication.
9) Attention is drawn to the possibility that some of the elements of this ISO/IEC publication may be the subject of patent rights. ISO and IEC shall not be held responsible for identifying any or all such patent rights.

International Standard ISO/IEC 14776-263 was prepared by subcommittee 25: Interconnection of information technology equipment, of ISO/IEC joint technical committee 1: Information technology.

The list of all currently available parts of the ISO/IEC 14776 series, under the general title *Information technology – Small computer system interface (SCSI)*, can be found on the IEC web site.

This International Standard has been approved by vote of the member bodies and the voting results may be obtained from the address given on the second title page.

This publication has been drafted in accordance with the ISO/IEC Directives, Part 2 except as described in 3.4 and 3.5.

Documents
Document Sharing Hub

Full document details: ISO IEC 14776-263-2018

A bilingual version of this publication may be issued at a later date.

IMPORTANT - The 'colour inside' logo on the cover page of this publication indicates that it contains colours which are considered to be useful for the correct understanding of its contents. Users should therefore print this document using a colour printer.

Documents
Document Sharing Hub

Full document details: ISO IEC 14776-263-2018

INTRODUCTION

The SCSI family of standards provides for many different transport protocols that define the rules for exchanging information between different SCSI devices. This document defines the rules for exchanging information between SCSI devices using a serial interconnect. Other SCSI transport protocol standards define the rules for exchanging information between SCSI devices using other interconnects.

Figure 1 shows the organization of the layers of this document.

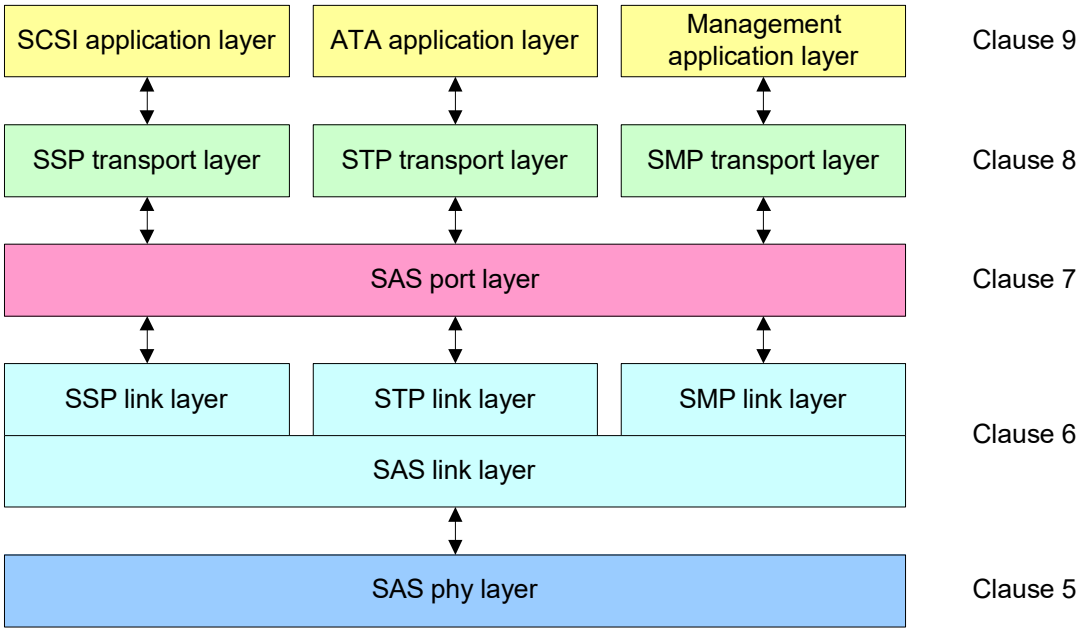

Figure 1 — Organization of this document

Documents
Document Sharing Hub
Full document details: ISO IEC 14776-263-2018

SCSI standards family

Figure 2 shows the relationship of this document to the other standards and related projects in the SCSI family of standards.

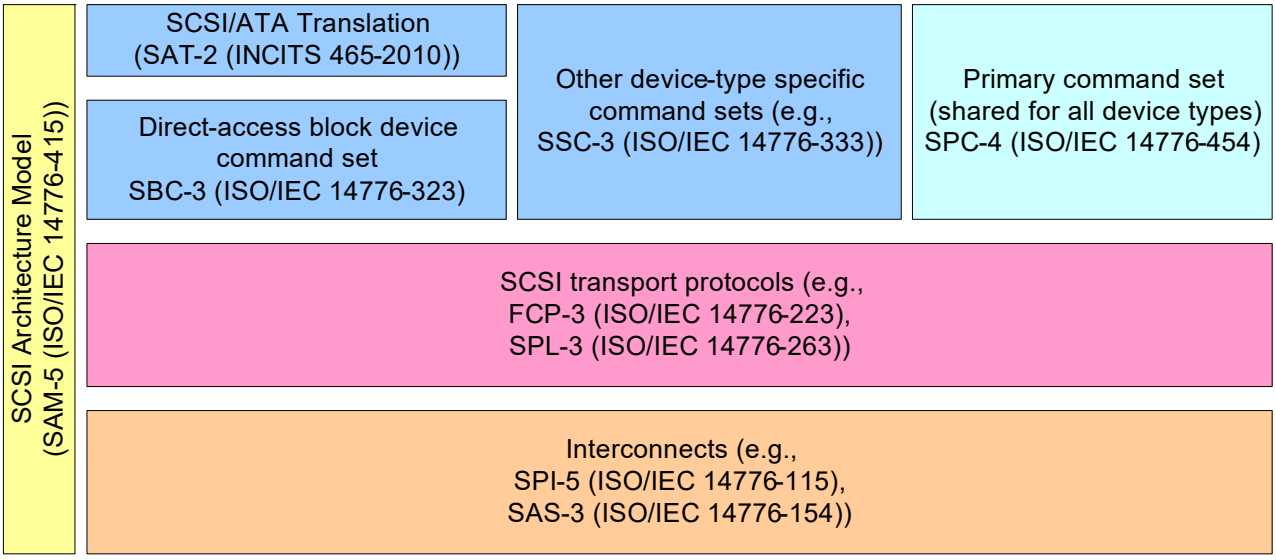

Figure 2 — SCSI document relationships

This document also defines the rules for exchanging information between ATA hosts and ATA devices using the same serial interconnect. Other ATA transport protocol standards define the rules for exchanging information between ATA hosts and ATA devices using other interconnects.

Figure 3 shows the relationship of this document to other standards and related projects in the ATA family of standards.

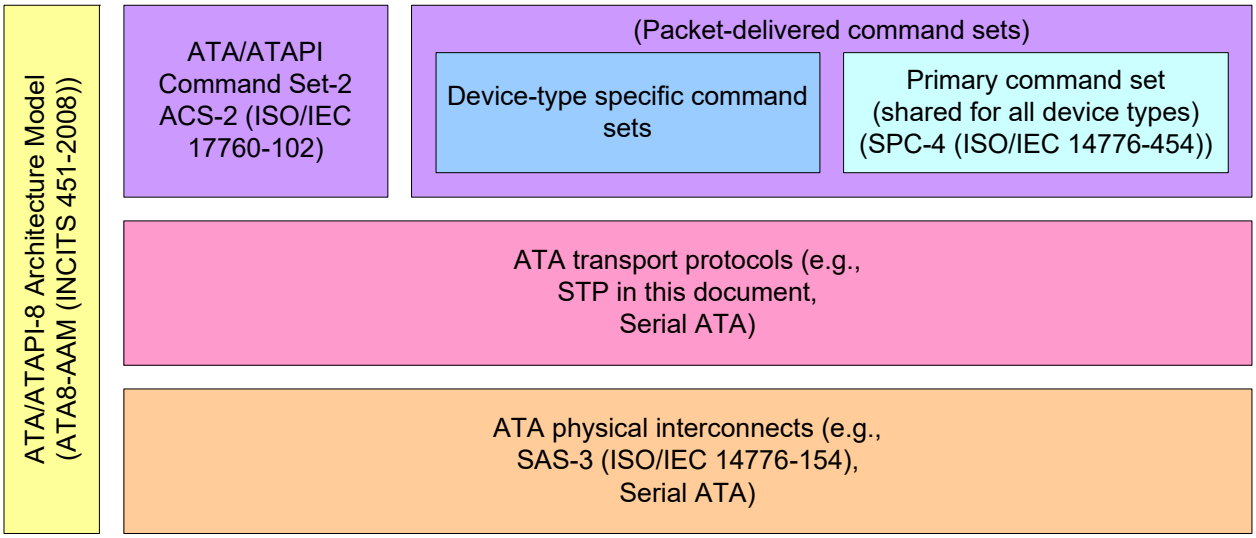

Figure 3 — ATA document relationships

Figure 2 and figure 3 show the general relationship of the documents to one another, and do not imply any hierarchy, protocol stack, or system architecture relationship.

Documents
Document Sharing Hub
Full document details: ISO IEC 14776-263-2018

These standards specify the interfaces, functions and operations necessary to ensure interoperability between conforming implementations. This document is a functional description. Conforming implementations may employ any design technique that does not violate interoperability.

Documents
Document Sharing Hub

Full document details: ISO IEC 14776-263-2018

INFORMATION TECHNOLOGY –
SMALL COMPUTER SYSTEM INTERFACE (SCSI) –

Part 263: SAS Protocol Layer - 3 (SPL-3)

1 Scope

This document defines the protocol layer of the Serial Attached SCSI (SAS) interconnect and three transport protocols that use the SAS interconnect:

a) Serial SCSI Protocol (SSP): a mapping of SCSI supporting multiple initiators and targets;
b) Serial ATA Tunneled Protocol (STP): a mapping of Serial ATA expanded to support multiple initiators and targets; and
c) Serial Management Protocol (SMP): a management protocol.

Documents
Document Sharing Hub

Full document details: ISO IEC 14776-263-2018

2 Normative references

The following documents are referred to in the text in such a way that some or all of their content constitutes requirements of this document. For dated references, only the edition cited applies. For undated references, the latest edition of the referenced document (including any amendments) applies.

Additional availability contact information is provided in Annex L.

ISO/IEC 17760-102, *Information technology - AT Attachment - Part 102: ATA/ATAPI Command Set - 2 (ACS-2)*

ISO/IEC 14776-151, *Information technology - Small Computer System Interface (SCSI) - Part 151: Serial Attached SCSI - 1.1 (SAS-1.1)*

ISO/IEC 14776-323, *Information technology - Small Computer System Interface (SCSI) - Part 323: SCSI Block Commands - 3 (SBC-3)*

ISO/IEC 14776-154, *Information technology - Small Computer System Interface (SCSI) - Part 154: Serial Attached SCSI - 3 (SAS-3)*

ISO/IEC 14776-454, *Information technology - Small Computer System Interface (SCSI) - Part 454: SCSI Primary Commands - 4 (SPC-4)*

INCITS 451-2008, *AT Attachment - 8 ATA/ATAPI Architecture Model (ATA8-AAM)*

INCITS 515, *Information technology - SCSI Architecture Model - 5 (SAM-5)* (planned as ISO/IEC 14776-415)

INCITS 518, *Information technology - SCSI Enclosure Services - 3 (SES-3)* (planned as ISO/IEC 14776-373)

For information on the current status of the listed documents, or regarding availability, contact the indicated organization.

Serial ATA Revision 3.1 (SATA). 18-July-2011 [1]

SFF-8485, *Serial GPIO (SGPIO) Bus* [2]

1. Serial ATA specifications are available from the Serial ATA International Organization (see http://www.sata-io.org)
2. SFF specifications are available from the SNIA SFF Technology Affiliate (see http://www.snia.org/sff).

Documents
Document Sharing Hub

Full document details: ISO IEC 14776-263-2018

3 Terms, definitions, symbols, abbreviations, keywords, and conventions

3.1 Terms and definitions

For the purposes of this document the following terms and definitions apply.

ISO and IEC maintain terminological databases for use in standardization at the following addresses:

- IEC Electropedia: available at http://www.electropedia.org/
- ISO Online browsing platform: available at http://www.iso.org/obp

3.1.1
8b10b coding
coding scheme that represents an 8-bit byte (i.e., a control byte or data byte) as a 10-bit character (i.e., a control character or data character)

Note 1 to entry: See 5.2.

3.1.2
8b10b encoding
method of encoding an 8-bit byte (i.e., a control byte or data byte) into a 10-bit character (i.e., a control character or data character)

Note 1 to entry: See 5.2.

3.1.3
10b8b decoding
method for decoding a 10-bit character (i.e., a control character or data character) into an 8-bit byte (i.e., a control byte or data byte)

Note 1 to entry: See 5.2.

3.1.4
active cable assembly
cable assembly (see SAS-3) that requires power for internal circuitry used in the transmission of the signal through the cable assembly

Note 1 to entry: See SAS-3.

3.1.5
active phy power condition
normal power condition for a SAS phy or expander phy

Note 1 to entry: See 4.10.1.2.

3.1.6
active zone manager
zone manager (see 3.1.258) that locks a zoning expander device (see 3.1.262)

Note 1 to entry: See 4.8.6.

3.1.7
affiliation
STP target port (see 3.1.229) state of limiting acceptance of connection requests to those from one or more STP initiator ports (see 3.1.224)

Note 1 to entry: See 6.19.4.

Documents
Document Sharing Hub

Full document details: ISO IEC 14776-263-2018

3.1.8
affiliation context
set of registers maintained by an STP target port for an STP initiator port holding an affiliation

Note 1 to entry: See 6.19.4.

3.1.9
aggregation
form of association that defines a whole-part relationship between the whole (i.e., aggregate) class and its parts

Note 1 to entry: This definition only applies when used in relation to UML.

Note 2 to entry: See 3.6.

3.1.10
application client
object that is the source of SCSI commands and task management function requests (see SAM-5), ATA commands (see ATA8-AAM), or SMP function requests

Note 1 to entry: See 4.1.5.

3.1.11
association
relationship between two or more classes that specifies connections among their objects

Note 1 to entry: This definition only applies when used in relation to UML.

Note 2 to entry: An association is a relationship that specifies that objects of one class are connected to objects of another class.

Note 3 to entry: See 3.6.

3.1.12
attached
attribute of a class used when an instance of that class is only accessible over a service delivery subsystem

3.1.13
attached SAS address
SAS address (see 3.1.169) of the attached phy or the SAS address of the STP target port in an STP SATA bridge (see 4.5.2)

Note 1 to entry: For example, the SAS address of an attached phy may be received in the incoming IDENTIFY address frame during the initialization sequence (see 4.1.2).

3.1.14
attribute
named property of a class that describes a range of values that its objects may hold

Note 1 to entry: This definition only applies when used in relation to UML.

Note 2 to entry: See 3.6.

3.1.15
AT Attachment
ATA
standard for the internal attachment of storage devices to hosts

Note 1 to entry: See ATA8-AAM.

Documents
Document Sharing Hub

Full document details: ISO IEC 14776-263-2018

3.1.16
ATA device
storage peripheral that processes ATA commands and device management functions

Note 1 to entry: Analogous to a SCSI target device (see 3.1.195).

Note 2 to entry: See ATA8-AAM.

3.1.17
ATA domain
I/O system consisting of an ATA host and one or more ATA devices that communicate with one another by means of a service delivery subsystem (see 3.1.203)

Note 1 to entry: Analogous to a SCSI domain (see 3.1.191).

Note 2 to entry: See ATA8-AAM.

3.1.18
ATA host
host device that originates requests to be processed by an ATA device

Note 1 to entry: Analogous to a SCSI initiator device (see 3.1.192).

Note 2 to entry: See ATA8-AAM.

3.1.19
big-endian
format for storage or transmission of binary data in which the most significant byte appears first

Note 1 to entry: In a multi-byte value, the byte containing the most significant bit is stored in the lowest memory address and transmitted first, and the byte containing the least significant bit is stored in the highest memory address and transmitted last (e.g., for the value 0080h, the byte containing 00h is stored in the lowest memory address, and the byte containing 80h is stored in the highest memory address).

3.1.20
bi-phase mark code
BMC
encoding in which a transition occurs at the beginning of each TTIU bit cell (see 3.1.247), a one is represented by a transition in the middle of the TTIU bit cell, and a zero is represented by no transition within the TTIU bit cell

Note 1 to entry: See 5.8.

3.1.21
Broadcast
information about an event in the SAS domain, communicated between phys with the BROADCAST primitive sequence (see 6.2.6.4) and/or the SMP ZONED BROADCAST function (see 9.4.3.20)

Note 1 to entry: See 4.1.15.

3.1.22
Broadcast propagation processor
BPP
object within an expander function (see 3.1.69) that manages Broadcasts (see 3.1.21)

Note 1 to entry: See 4.5.5.

3.1.23
burst time
part of an OOB signal where the OOB burst is transmitted

Note 1 to entry: See SAS-3.

Documents
Document Sharing Hub

Full document details: ISO IEC 14776-263-2018