ISO/IEC 15067-3-31

Edition 1.0 2024-03

INTERNATIONAL STANDARD

colour inside

Information technology – Home Electronic System (HES) application model – Part 3-31: Protocol of energy management agents for demand-response energy management and interactions among these agents

ISO/IEC 15067-3-31:2024-03(en)

Documents
Document Sharing Hub

Full document details: ISO IEC 15067-3-31-2024

THIS PUBLICATION IS COPYRIGHT PROTECTED
Copyright © 2024 ISO/IEC, Geneva, Switzerland

All rights reserved. Unless otherwise specified, no part of this publication may be reproduced or utilized in any form or by any means, electronic or mechanical, including photocopying and microfilm, without permission in writing from either IEC or IEC's member National Committee in the country of the requester. If you have any questions about ISO/IEC copyright or have an enquiry about obtaining additional rights to this publication, please contact the address below or your local IEC member National Committee for further information.

IEC Secretariat
3, rue de Varembé
CH-1211 Geneva 20
Switzerland

Tel.: +41 22 919 02 11
info@iec.ch
www.iec.ch

About the IEC
The International Electrotechnical Commission (IEC) is the leading global organization that prepares and publishes International Standards for all electrical, electronic and related technologies.

About IEC publications
The technical content of IEC publications is kept under constant review by the IEC. Please make sure that you have the latest edition, a corrigendum or an amendment might have been published.

IEC publications search - webstore.iec.ch/advsearchform
The advanced search enables to find IEC publications by a variety of criteria (reference number, text, technical committee, …). It also gives information on projects, replaced and withdrawn publications.

IEC Just Published - webstore.iec.ch/justpublished
Stay up to date on all new IEC publications. Just Published details all new publications released. Available online and once a month by email.

IEC Customer Service Centre - webstore.iec.ch/csc
If you wish to give us your feedback on this publication or need further assistance, please contact the Customer Service Centre: sales@iec.ch.

IEC Products & Services Portal - products.iec.ch
Discover our powerful search engine and read freely all the publications previews, graphical symbols and the glossary. With a subscription you will always have access to up to date content tailored to your needs.

Electropedia - www.electropedia.org
The world's leading online dictionary on electrotechnology, containing more than 22 500 terminological entries in English and French, with equivalent terms in 25 additional languages. Also known as the International Electrotechnical Vocabulary (IEV) online.

Documents
Document Sharing Hub

Full document details: ISO IEC 15067-3-31-2024

ISO/IEC 15067-3-31

Edition 1.0 2024-03

INTERNATIONAL STANDARD

colour inside

Information technology – Home Electronic System (HES) application model – Part 3-31: Protocol of energy management agents for demand-response energy management and interactions among these agents

INTERNATIONAL
ELECTROTECHNICAL
COMMISSION

ICS 35.200

ISBN 978-2-8322-8357-8

Warning! Make sure that you obtained this publication from an authorized distributor.

Documents
Document Sharing Hub

Full document details: ISO IEC 15067-3-31-2024

CONTENTS

FOREWORD 5
INTRODUCTION 7
1 Scope 8
2 Normative references 8
3 Terms, definitions and abbreviated terms 9
3.1 Terms and definitions 9
3.2 Abbreviated terms 9
4 Conformance 10
5 Energy management agent architecture for home or residential community 10
5.1 Overview 10
5.2 EMA protocol 11
6 EMAP service procedure and message format 13
6.1 Overview 13
6.2 RegisterParty 14
6.2.1 Overview 14
6.2.2 Query registration 15
6.2.3 Create registration 15
6.2.4 Cancel registration 15
6.2.5 Request reregistration 16
6.2.6 Message formats for RegisterParty 16
6.3 Event 20
6.3.1 Overview 20
6.3.2 Push 20
6.3.3 Pull 21
6.3.4 Message formats for event 21
6.4 Report 23
6.4.1 Overview 23
6.4.2 Register report 23
6.4.3 Request report 24
6.4.4 Send report 24
6.4.5 Cancel report 25
6.4.6 Message formats for report 25
6.5 Opt 29
6.5.1 Overview 29
6.5.2 Create opt 29
6.5.3 Cancel opt 29
6.5.4 Message formats for opt 30
6.6 Poll 32
7 Transport protocol 36
7.1 CoAP 36
7.1.1 General 36
7.1.2 Push and pull implementation 36
7.1.3 Service endpoint URIs 36
7.1.4 CoAP methods 37
7.1.5 Failure conditions 37
7.1.6 CoAP response codes 37

AVA Documents
Document Sharing Hub
Full document details: ISO IEC 15067-3-31-2024

8 Security 38
Annex A (informative) EMAP opt-change 39
A.1 Opt-change example message 39
A.2 Items for opt-change mode 41
Annex B (informative) JSON schema 43
B.1 JSON 43
B.2 JSON schema 43
Bibliography 45

Figure 1 – Example of an energy management system in a residential area 10
Figure 2 – A hierarchical EMAP application model in a residential area 11
Figure 3 – A point-to-point EMAP application model in a residential area 12
Figure 4 – A hybrid EMAP application model in a residential area 12
Figure 5 – Two-step service procedures of EMAP 14
Figure 6 – Interaction diagram: Query registration 15
Figure 7 – Interaction diagram: Create registration 15
Figure 8 – Interaction diagram: Cancel registration 16
Figure 9 – Interaction diagram: Request reregistration – Push operation 16
Figure 10 – emapQueryRegistration simplified message format 16
Figure 11 – emapCreatedPartyRegistration simplified message format 17
Figure 12 – emapCreatePartyRegistration simplified message format 18
Figure 13 – emapCancelPartyRegistration simplified message format 18
Figure 14 – emapCanceledPartyRegistration simplified message format 18
Figure 15 – emapRequestReregistration simplified message format 19
Figure 16 – emapResponse message format 19
Figure 17 – Event interaction diagram – Push operation 20
Figure 18 – Event interaction diagram – Pull operation 21
Figure 19 – emapRequestEvent simplified message format 21
Figure 20 – emapPoll simplified message format 22
Figure 21 – emapDistributeEvent simplified message format 22
Figure 22 – emapCreatedEvent simplified message format 23
Figure 23 – Interaction diagram: Register report – Push operation 24
Figure 24 – Interaction diagram: Request report – Push operation 24
Figure 25 – Interaction diagram: Send report – Push operation 25
Figure 26 – Interaction diagram: Cancel report – Push operation 25
Figure 27 – emapRegisterReport simplified message format 26
Figure 28 – emapRegisteredReport simplified message format 26
Figure 29 – emapCreateReport simplified message format 27
Figure 30 – emapCreatedReport simplified message format 27
Figure 31 – emapUpdateReport simplified message format 27
Figure 32 – emapUpdatedReport simplified message format 28
Figure 33 – emapCancelReport simplified message format 28
Figure 34 – emapCanceledReport simplified message format 29
Figure 35 – Interaction diagram: Create opt 29
AVA Documents
Document Sharing Hub
Full document details: ISO IEC 15067-3-31-2024

Figure 36 – Interaction diagram: Cancel opt 30
Figure 37 – emapCreateOpt simplified message format 30
Figure 38 – emapCreatedOpt simplified message format 31
Figure 39 – emapCancelOpt simplified message format 31
Figure 40 – emapCanceledOpt simplified message format 32
Figure 41 – Interaction diagram: Poll (nothing in queue) 33
Figure 42 – Interaction diagram: Poll (emapCancelPartyRegistration reply) 33
Figure 43 – Interaction diagram: Poll (emapRequestReregistration reply) 33
Figure 44 – Interaction diagram: Poll (emapDistributeEvent reply) 34
Figure 45 – Interaction diagram: Poll (emapRegisterReport reply) 34
Figure 46 – Interaction diagram: Poll (emapCreateReport reply) 34
Figure 47 – Interaction diagram: Poll (emapUpdateReport reply) 35
Figure 48 – Interaction diagram: Poll (emapCancelReport reply) 35
Figure A.1 – Example of opt-change in CreatePartyRegistration message 39
Figure A.2 – Example of opt-change in CreateOpt message 40
Figure A.3 – Example of opt-change in DistributeEvent message 41

Table A.1 – Elements for opt-change mode 42

Documents
Document Sharing Hub

Full document details: ISO IEC 15067-3-31-2024

© ISO/IEC 2024

INFORMATION TECHNOLOGY – HOME ELECTRONIC SYSTEM (HES) APPLICATION MODEL –

Part 3-31: Protocol of energy management agents for demand-response energy management and interactions among these agents

FOREWORD

1) ISO (the International Organization for Standardization) and IEC (the International Electrotechnical Commission) form the specialized system for worldwide standardization. National bodies that are members of ISO or IEC participate in the development of International Standards through technical committees established by the respective organization to deal with particular fields of technical activity. ISO and IEC technical committees collaborate in fields of mutual interest. Other international organizations, governmental and non-governmental, in liaison with ISO and IEC, also take part in the work.

2) The formal decisions or agreements of IEC and ISO on technical matters express, as nearly as possible, an international consensus of opinion on the relevant subjects since each technical committee has representation from all interested IEC and ISO National bodies.

3) IEC and ISO documents have the form of recommendations for international use and are accepted by IEC and ISO National bodies in that sense. While all reasonable efforts are made to ensure that the technical content of IEC and ISO documents is accurate, IEC and ISO cannot be held responsible for the way in which they are used or for any misinterpretation by any end user.

4) In order to promote international uniformity, IEC and ISO National bodies undertake to apply IEC and ISO documents transparently to the maximum extent possible in their national and regional publications. Any divergence between any IEC and ISO document and the corresponding national or regional publication shall be clearly indicated in the latter.

5) IEC and ISO do not provide any attestation of conformity. Independent certification bodies provide conformity assessment services and, in some areas, access to IEC and ISO marks of conformity. IEC and ISO are not responsible for any services carried out by independent certification bodies.

6) All users should ensure that they have the latest edition of this document.

7) No liability shall attach to IEC and ISO or their directors, employees, servants or agents including individual experts and members of its technical committees and IEC and ISO National bodies for any personal injury, property damage or other damage of any nature whatsoever, whether direct or indirect, or for costs (including legal fees) and expenses arising out of the publication, use of, or reliance upon, this ISO/IEC document or any other IEC and ISO documents.

8) Attention is drawn to the Normative references cited in this document. Use of the referenced publications is indispensable for the correct application of this document.

9) IEC and ISO draw attention to the possibility that the implementation of this document may involve the use of (a) patent(s). IEC and ISO take no position concerning the evidence, validity or applicability of any claimed patent rights in respect thereof. As of the date of publication of this document, IEC and ISO had not received notice of (a) patent(s), which may be required to implement this document. However, implementers are cautioned that this may not represent the latest information, which may be obtained from the patent database available at https://patents.iec.ch and www.iso.org/patents. IEC and ISO shall not be held responsible for identifying any or all such patent rights.

ISO/IEC 15067-3-31 has been prepared by subcommittee 25: Interconnection of information technology equipment, of ISO/IEC joint technical committee 1: Information technology. It is an International Standard.

The text of this International Standard is based on the following documents:

Draft	Report on voting
JTC1-SC25/3205/FDIS	JTC1-SC25/3219/RVD

Full information on the voting for its approval can be found in the report on voting indicated in the above table.

The language used for the development of this International Standard is English.

Documents
Document Sharing Hub

Full document details: ISO IEC 15067-3-31-2024

© ISO/IEC 2024

This document was drafted in accordance with ISO/IEC Directives, Part 2, and developed in accordance with ISO/IEC Directives, Part 1, and the ISO/IEC Directives, JTC 1 Supplement available at www.iec.ch/members_experts/refdocs and www.iso.org/directives.

A list of all parts of the ISO/IEC 15067 series, published under the general title *Information technology – Home Electronic System (HES) application model*, can be found on the IEC and ISO websites.

IMPORTANT – The "colour inside" logo on the cover page of this document indicates that it contains colours which are considered to be useful for the correct understanding of its contents. Users should therefore print this document using a colour printer.

Documents
Document Sharing Hub

Full document details: ISO IEC 15067-3-31-2024

INTRODUCTION

This document specifies a protocol to facilitate communications among interacting energy management agents (EMAs) for energy management applications. This document specifies a message format and sequences of message exchanges in a protocol called the EMA protocol (EMAP) to enable logical interactions among EMAs.

EMAP includes messages that enable demand response (DR) in community housing such as an apartment building or a campus of houses or apartment buildings, as introduced in ISO/IEC 15067-3-3. ISO/IEC 15067-3-3 was created because utilities throughout the world are investing heavily in smart grid infrastructures to ensure a reliable supply of electricity and to accommodate DR technologies for residential homes and apartment buildings. DR programmes are being offered to residential consumers for energy conservation and for energy management to align demand for power with available supplies according to customer preferences for appliance usage and budget constraints. An interacting EMA extends the capability of a single EMA to allocate energy among houses efficiently in a community and among appliances within houses, and to accommodate a choice of external energy sources or local energy sources or both linked to an EMA. External sources can be public utilities or distributed energy resources (DERs) in other homes, possibly purchased using transactive energy. Local sources can include renewable power generators and storage devices at the customer premises linked to an EMA. Consumer devices linked to an EMA can participate in energy management programmes such as DR and can interconnect logically via an EMA with local DER equipment such as generators (wind and solar) and energy storage devices.

This document facilitates utility-based DR programmes, but does not mandate such programmes. Consumers may choose to provide electricity using DER locally with a house, an apartment complex, a community, or a microgrid without any connection to a public utility. This document also applies to non-utility DR programmes that are based within the apartment complex operating as a microgrid.

Typical smart energy services can include integrated energy management for multiple energy systems, energy sharing and trading within the community, energy information sharing for more efficient energy usage, etc. These energy services offer benefits in electrical energy management in a house, a residential community or a building consisting of multiple apartments.

The intent of EMAP is to accommodate flexible and efficient energy management systems over a broad range of EMA deployments. This document has been developed to promote interoperability among products from different manufacturers. EMAP enables automated demand-response services in a house, a residential community or a building consisting of multiple apartments for co-ordinating and allocating energy consumption and generation among multiple EMAs in different locations. The co-ordination among EMAs offers improved energy management and overall efficiency. Each EMA enables the allocation of energy among appliances and switching energy sources from grid to local generation or storage according to consumer preferences.

This document specifies message formats for DR, pricing, and DER communications to manage customer energy resources, including load, generation, and storage in a home, building and apartment complex. Communication messages specified in this document for the DR command set support direct load control, time-of-use (TOU), critical-peak-pricing (CPP), real-time pricing (RTP), peak time rebates, various types of block rates, transactive energy, and a range of opt-in, opt-out and service modifications. This document can interact with IEC 62746-10-1, which specifies message and application-layer protocol profiles relevant for systems connected to an external DR service provider. Unlike IEC 62746-10-1, EMAP can support bi-directional exchange of DR events between EMAs for co-operative energy management according to the customer's budget by using the opt commands in a hierarchical or point-to-point architecture.

If a logical hierarchical tree structure has been installed, EMAP messages (e.g. report, opt) may be transferred with aggregation or disaggregation through intermediate EMAs. In addition, the messages (e.g. DR command, report) specified in this document may be relayed across intermediate EMAs. The aggregation/disaggregation or relay mode is optionally provided.

AVA Documents
Document Sharing Hub

Full document details: ISO IEC 15067-3-31-2024

© ISO/IEC 2024

INFORMATION TECHNOLOGY – HOME ELECTRONIC SYSTEM (HES) APPLICATION MODEL –

Part 3-31: Protocol of energy management agents for demand-response energy management and interactions among these agents

1 Scope

This document specifies a protocol for energy management agents (EMAs) to facilitate communications among these agents for demand response (DR) energy management applications. The EMA protocol (EMAP) provides a logical connection among EMAs in community housing such as an apartment building or a campus of houses or apartment buildings. This document also specifies interaction procedures and message formats for DR energy management as introduced in ISO/IEC 15067-3-3. The EMAP supports interactions among EMAs at OSI (Open System Interconnection) layer 7 with a message transfer protocol. An EMA can be embedded in devices such as a thermostat, a smart appliance, or other consumer products. The choice of interconnection depends on the system and the network topology, which can be arranged in a mesh or hierarchical tree structure. An intermediate EMA may relay messages sent between EMAs.

NOTE 1 The application message set that uses the EMAP OSI layer 7 is not part of the protocol specification in this document. It is part of the EMA above OSI layer 7. The application message set can use the ISO/IEC 14543 series, ISO/IEC 10192-3, the IEC 62541 series and the ISO/IEC 30118 series.

NOTE 2 This document facilitates utility-based DR programmes, but does not mandate such programmes. Consumers can choose to provide electricity using DER locally with a house, an apartment complex, a community, or a microgrid without any connection to a public utility.

NOTE 3 In a residential microgrid, data such as DR messages and price signals can be issued by an energy management system or an EMA for scheduling, forecasting functions, etc. to optimize energy consumption or generation without relying on a public utility.

2 Normative references

The following documents are referred to in the text in such a way that some or all of their content constitutes requirements of this document. For dated references, only the edition cited applies. For undated references, the latest edition of the referenced document (including any amendments) applies.

ISO/IEC 15067-3:2012, *Information technology – Home Electronic System (HES) application model – Part 3: Model of a demand-response energy management system for HES*

ISO/IEC 15067-3-3:2019, *Information technology – Home Electronic System (HES) application model – Part 3-3: Model of a system of interacting energy management agents (EMAs) for demand-response energy management*

IETF RFC 7252, *The Constrained Application Protocol (CoAP)*, edited by Z. Shelby et al., June 2014, available at: https://tools.ietf.org/rfc/rfc7252.txt [viewed 2023-05-31]

Documents
Document Sharing Hub

Full document details: ISO IEC 15067-3-31-2024

© ISO/IEC 2024

3 Terms, definitions and abbreviated terms

3.1 Terms and definitions

For the purposes of this document, the terms and definitions given in ISO/IEC 15067-3:2012, ISO/IEC 15067-3-3:2019 and the following apply.

ISO and IEC maintain terminology databases for use in standardization at the following addresses:

- IEC Electropedia: available at https://www.electropedia.org/
- ISO Online browsing platform: available at https://www.iso.org/obp

3.1.1
client EMA
cEMA
energy management agent (EMA) that acts as a client to another EMA

[SOURCE ISO/IEC 15067-3-3:2019, 3.1.1]

3.1.2
EMA protocol
EMAP
protocol to facilitate communications among interacting energy management agents (EMAs) for energy management applications

3.1.3
transaction
smallest unit of a work process consisting of an exchange between two or more participants or systems

[SOURCE ISO 15489-1:2016, 3.18]

3.1.4
server EMA
sEMA
energy management agent (EMA) that acts as a server to other EMAs

[SOURCE ISO/IEC 15067-3-3:2019, 3.1.7]

3.2 Abbreviated terms

cEMA	client EMA
CoAP	constrained application protocol
DER	distributed energy resources
DR	demand response
DTLS	datagram transport layer security
EMA	energy management agent
EMAP	EMA protocol
HAN	home area network
HTTP	hypertext transfer protocol
JSON	javascript object notation
OSI	open system interconnection
sEMA	server EMA
UDP	user datagram protocol

Documents
Document Sharing Hub
Full document details: ISO IEC 15067-3-31-2024

4 Conformance

Implementations of a protocol among EMAs shall conform to protocol procedures and message formats specified in Clauses 6 and 7.

5 Energy management agent architecture for home or residential community

5.1 Overview

Figure 1 shows an example of a physical energy management system in a community that includes multiple private residential homes and common spaces. The configuration shown in Figure 1 consists of multiple interacting EMAs in the home, which are specified in ISO/IEC 15067-3-3.

In some cases, one or more EMAs may be physically located in a home. For an apartment complex, there may be an EMA in each apartment, in the common area of each building, and in the management office of the complex. An EMA may be embedded in devices such as a thermostat, a smart appliance, or other consumer products.

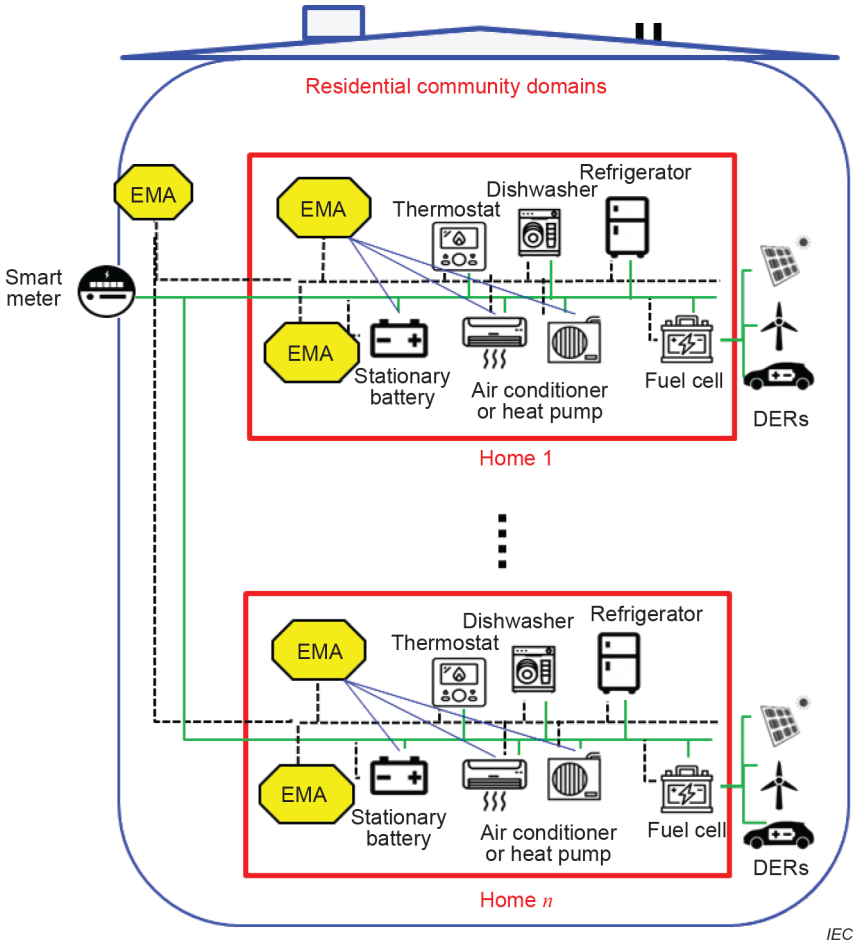

NOTE 1 Adapted from Figure 1 of ISO/IEC 15067-3-3:2019 to clarify the functions of the EMAs.

NOTE 2 The home area networks (HANs) are shown with dashed line in black and the power line is shown in solid green.

NOTE 3 The shapes are explained in 5.2 of ISO/IEC 15067-3-3:2019.

Figure 1 – Example of an energy management system in a residential area

Documents
Document Sharing Hub
Full document details: ISO IEC 15067-3-31-2024

The EMA applies complex algorithms to exchange energy-related data among EMAs and devices. Such energy-related data may include energy consumption targets, cost of energy, usage data, energy allocation to appliances, distributed energy resources (DERs), and EMA locations and rolls within the community.

The EMAP supports interactions among EMAs at OSI layer 7 including application messages and data. The interactions provide the capability of a system with a single EMA to allocate energy among houses efficiently in a community and among appliances within houses, and to accommodate a choice of external energy sources or local energy sources or both linked to the EMA. External sources may be public utilities or other suppliers. Local sources may include local power generators and storage devices linked to the EMA. Consumer devices managed by the EMA can also participate in energy management programmes such as DR and can interconnect with the EMA including DERs, local generators (wind and solar) and energy storage devices.

NOTE The application message data and encoding for exchange can use the ISO/IEC 14543 series, ISO/IEC 10192-3, the IEC 62541 series and the ISO/IEC 30118 series.

The logical network arrangement of EMAs shall consist of a mesh or hierarchical tree structure. If a hierarchical tree topology is chosen for the interconnection among EMAs, the EMAP messages may be transferred without modification through an intermediate EMA. In addition, application layer messages as specified in the ISO/IEC 14543 series, ISO/IEC 10192-3, the IEC 62541 series and the ISO/IEC 30118 series may be passed across intermediate EMAs for service integration.

5.2 EMA protocol

The EMAP shall provide a logical interaction among EMAs. The EMAP enables energy management applications that co-operate and co-ordinate among EMAs. The EMAP specifies an application-layer protocol that includes protocol procedures and message formats specified in Clause 6. The EMAP specifies the protocol syntax, semantics, message formats, message sequences, etc. to ensure interoperability over a broad range of EMA deployments shown in Figure 2 to Figure 4. It also specifies a communication mechanism through which application messages may be passed among EMAs. Figure 2 shows a hierarchical EMAP application model in a residential area. Figure 3 shows a point-to-point EMAP application model. Figure 4 shows a hybrid EMAP application model. In these figures a product designed as an EMA can be an sEMA as well as a cEMA. In Figure 2, Figure 3 and Figure 4, arrows are logical connections and red arrows indicate HAN networks.

To support DR load control in a hierarchical situation, the sEMA shall send DR event or price signals to the cEMAs. If a cEMA accepts the DR event, then it subscribes to the DR event. Moreover, the cEMA adjusts the DR event within the available range to avoid penalties while performing the DR event. The cEMA can update the DR event if the cEMA is unable to limit the energy consumption under the subscribed control.

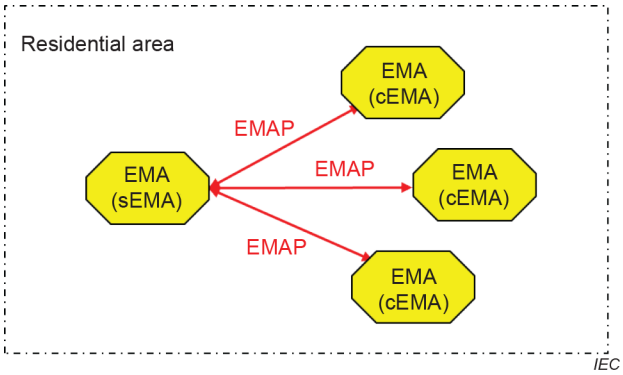

Figure 2 – A hierarchical EMAP application model in a residential area

Documents
Document Sharing Hub
Full document details: ISO IEC 15067-3-31-2024

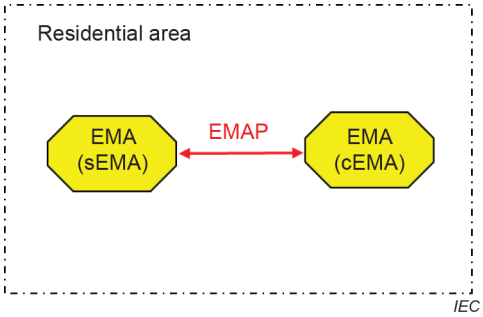

Figure 3 – A point-to-point EMAP application model in a residential area

This document specifies the protocol between EMAs in the point-to-point and hierarchical EMA configurations. Alternative configurations of an EMA framework architecture could be considered in a different standard.

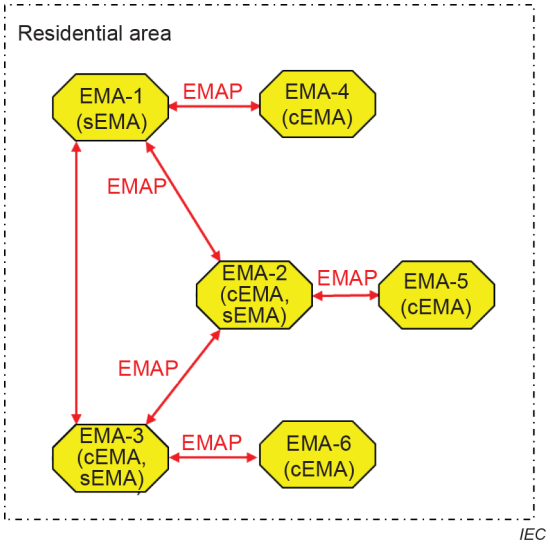

Figure 4 – A hybrid EMAP application model in a residential area

Clause 6 specifies a set of message exchanges for performing various functions and operations. Clause 7 contains a set of transport mechanisms for implementing the services. The transport mechanisms rely upon RFC 7252 "Constrained Application Protocol (CoAP)" and RFC 7159 "JavaScript object notation (JSON) Data Interchange format".

CoAP is a specialized Internet application protocol for devices with limited processing capability, as specified in RFC 7252. It enables EMA devices to communicate with the Internet using similar protocols. CoAP is designed for use between devices on the same constrained network (e.g. low-power wireless home networks), between devices and general nodes on the Internet, and between devices on different constrained networks both joined by an internet.

JSON is a public file format as specified in RFC 7159 that uses human-readable text to transmit data objects consisting of attribute–value pairs and array data types (or any other serializable value). It is a very common data format used for asynchronous browser–server communication.

Documents
Document Sharing Hub
Full document details: ISO IEC 15067-3-31-2024

Clause 6 specifies the following services:

1) RegisterParty: This service identifies a sEMA and a cEMA in advance of interactions using registration procedures.
2) Event: This service is used to call for service parameters and event information under a transaction. The service parameters and event information distinguish different types of events: reliability events, emergency events, price events, regulation events and possibly other types in the future.
3) Report: The report service enables feedback to the server in order to provide periodic or one-time information on the state of a resource.
4) Opt: The opt-in service and opt-out service enable the creation and termination of DR events generated by the service provider. The opt-change service overrides the availability schedule and addresses short-term changes in availability.

6 EMAP service procedure and message format

6.1 Overview

Clause 6 specifies protocol procedures and message formats to ensure interoperability among various implementations of EMAs. The application message set and data model (or schema) will be specified in other standards. Figure 5 illustrates a two-step service procedure in the EMAP, which consists of the RegisterParty service and the event or report or opt service. The RegisterParty service identifies an sEMA and a cEMA in advance of interactions using registration procedures. After completion of party registration, the event or report or opt service is used to call for event information, the state of a resource, and changes in events, respectively.

In the service procedure the sEMA and cEMA shall communicate using CoAP, as defined in IETF RFC 7252, in either push mode (where the sEMA initiates communication) or in a pull mode (the cEMA requests information from the sEMA to begin a series of message exchanges).

The sequence diagrams shown in Clause 6 are for a push interaction pattern. In a pull mode the cEMA shall periodically poll the sEMA using Poll to provide the sEMA an opportunity to cancel the registration or request the cEMA to reregister. Refer to 6.6 for sample sequence diagrams of the pull interaction pattern.

These services use the CoAP connect process and subscription process between the sEMA and the cEMA. CoAP is a service layer protocol that is intended for use in resource-constrained internet devices, such as wireless sensor network nodes. CoAP is designed to translate easily to hypertext transfer protocol (HTTP) for simplified integration with the web, while also meeting specialized requirements such as multicast support, very low overhead, and simplicity.

The details of how these interactions are performed within the context of a specific transport mechanism are specified in Clause 7.

All application-level error conditions shall be conveyed through the status code element of the CoAP response payload. Refer to 7.1.6 for error conditions.

Documents
Document Sharing Hub
Full document details: ISO IEC 15067-3-31-2024