INTERNATIONAL STANDARD

ISO/IEC 15938-3

First edition
2002-06-20

AMENDMENT 1
2004-08-01

Information technology — Multimedia content description interface —

Part 3: **Visual**

AMENDMENT 1: Visual extensions

Technologies de l'information — Interface de description du contenu multimédia —

Partie 3: Visuel

AMENDEMENT 1: Extensions visuelles

Reference number
ISO/IEC 15938-3:2002/Amd.1:2004(E)

© ISO/IEC 2004

Full document details: ISO_IEC 15938-3_2002_Amd 1_2004

PDF disclaimer

This PDF file may contain embedded typefaces. In accordance with Adobe's licensing policy, this file may be printed or viewed but shall not be edited unless the typefaces which are embedded are licensed to and installed on the computer performing the editing. In downloading this file, parties accept therein the responsibility of not infringing Adobe's licensing policy. The ISO Central Secretariat accepts no liability in this area.

Adobe is a trademark of Adobe Systems Incorporated.

Details of the software products used to create this PDF file can be found in the General Info relative to the file; the PDF-creation parameters were optimized for printing. Every care has been taken to ensure that the file is suitable for use by ISO member bodies. In the unlikely event that a problem relating to it is found, please inform the Central Secretariat at the address given below.

© ISO/IEC 2004

All rights reserved. Unless otherwise specified, no part of this publication may be reproduced or utilized in any form or by any means, electronic or mechanical, including photocopying and microfilm, without permission in writing from either ISO at the address below or ISO's member body in the country of the requester.

ISO copyright office
Case postale 56 • CH-1211 Geneva 20
Tel. + 41 22 749 01 11
Fax + 41 22 749 09 47
E-mail copyright@iso.org
Web www.iso.org

Published in Switzerland

© ISO/IEC 2004 – All rights reserved

Documents
Document Sharing Hub

Full document details: ISO_IEC 15938-3_2002_Amd 1_2004

Foreword

ISO (the International Organization for Standardization) and IEC (the International Electrotechnical Commission) form the specialized system for worldwide standardization. National bodies that are members of ISO or IEC participate in the development of International Standards through technical committees established by the respective organization to deal with particular fields of technical activity. ISO and IEC technical committees collaborate in fields of mutual interest. Other international organizations, governmental and non-governmental, in liaison with ISO and IEC, also take part in the work. In the field of information technology, ISO and IEC have established a joint technical committee, ISO/IEC JTC 1.

International Standards are drafted in accordance with the rules given in the ISO/IEC Directives, Part 2.

The main task of the joint technical committee is to prepare International Standards. Draft International Standards adopted by the joint technical committee are circulated to national bodies for voting. Publication as an International Standard requires approval by at least 75 % of the national bodies casting a vote.

Attention is drawn to the possibility that some of the elements of this document may be the subject of patent rights. ISO and IEC shall not be held responsible for identifying any or all such patent rights.

Amendment 1 to ISO/IEC 15938-3:2002 was prepared by Joint Technical Committee ISO/IEC JTC 1, *Information technology,* Subcommittee SC 29, *Coding of audio, picture, multimedia and hypermedia information.*

© ISO/IEC 2004 — All rights reserved

Documents
Document Sharing Hub
Full document details: ISO_IEC 15938-3_2002_Amd 1_2004

Introduction

This document specifies the first Amendment to the Visual part of the ISO/IEC 15938 standard. The normative syntax of the Visual description tools is specified in this document using the Description Definition Language (DDL) and the normative semantics is specified using text.

The current set of relevant documents for the Visual description tools is given as follows:

ISO/IEC 15938-3 – Visual
ISO/IEC 15938-3/Amd.1 – Visual extensions
ISO/IEC TR 15938-8 – Extraction and use of MPEG-7 descriptions
ISO/IEC TR 15938-8/Amd.1 – Extensions of extraction and use of MPEG-7 descriptions

© ISO/IEC 2004 — All rights reserved
Documents
Document Sharing Hub
Full document details: ISO_IEC 15938-3_2002_Amd 1_2004

Information technology — Multimedia content description interface —

Part 3:
Visual

AMENDMENT 1: Visual extensions

Replace subclause 1.2 with:

1.2. Overview of Visual Description Tools

This part of ISO/IEC 15938 specifies tools for description of visual content, including still images, video and 3D models. These tools are defined by their syntax in DDL and binary representations and semantics associated with the syntactic elements. They enable description of the visual features of the visual material, such as color, texture, shape and motion, as well as localization of the described objects in the image or video sequence. An overview of the visual description tools is shown in Figure 1.

The basic structure description tools include five supporting tools of visual descriptions defined in clauses 6-11. They are categorized into two groups, descriptor containers and basic supporting tools. The former consists of three datatypes, GridLayout providing efficient representations of visual features on grids, TimeSeries representing temporal arrays of several descriptions, GofGopFeature describes representative descriptions over video segment, and MultipleView describing a 3D object using several pictures captured from different view angles. The latter contains two tools, Spatial2DcoordinateSystem used to specify the 2D coordinate system and TemporalInterpolation indicating the interpolation method between two samples on a time axis.

The remaining description tools, except for the FaceRecognition descriptor, are associated with visual features and are grouped into five feature categories: Color, Texture, Shape, Motion and Localization.

The color description tools include five color descriptors to represent different aspects of color features: representative colors (DominantColor), color distribution (ScalableColor), spatial distribution of colors (ColorLayout and ColorStructure) and perceptual feeling of illumination color (ColorTemperature). It also contains three supporting tools, ColorSpace and ColorQuantization used in DominantColor and IlluminationInvariantColor to extend four color descriptors, DominantColor, ScalableColor, ColorLayout and ColorStructure, to support illumination invariant similarity matching. An extension of ScalableColor to a group of frames or pictures (GoFGoPColor) is also included in this group. All the color descriptors can be extracted from arbitrarily shaped regions.

The texture description tools facilitate browsing (TextureBrowsing) and similarity retrieval (HomogeneousTexture and EdgeHistogram) using the texture of a still or moving image region. All the texture descriptors can be extracted from arbitrarily shaped regions.

The shape description tools include two descriptors that characterize different shape features of a 2D object or region. The RegionShape descriptor captures the distribution of all pixels within a region and the Contour Shape descriptor characterizes the shape properties of the contour of an object. The extension of RegionShape is also defined as ShapeVariation to describe temporal variation of shape over video segment. The Shape3D descriptor provides an intrinsic shape characterization of 3D mesh models.

The motion description tools include four descriptors that characterize various aspects of motion. The CameraMotion descriptor specifies a set of basic camera operations such as, for example, panning and tilting. The motion of a key point (pixel) from a moving object or region can be characterized by the MotionTrajectory descriptor. The ParametricMotion descriptor characterizes an evolution of an arbitrarily shaped region over time in terms of a 2D geometric transformation. Finally, the MotionActivity descriptor captures the pace of the motion in the sequence, as perceived by the viewer. All motion descriptors except for CameraMotion can be extracted from arbitrarily shaped regions.

The localization description tools can be used to indicate regions of interest in the spatial (RegionLocator) and spatio-temporal (SpatioTemporalLocator) domains.

© ISO/IEC 2004 — All rights reserved

Documents
Document Sharing Hub
Full document details: ISO_IEC 15938-3_2002_Amd 1_2004

The FaceRecognition descriptor and the Advance Face Recognition descriptor are not associated with any particular visual feature and can be used to describe a human face for applications requiring the matching and retrieval of face images.

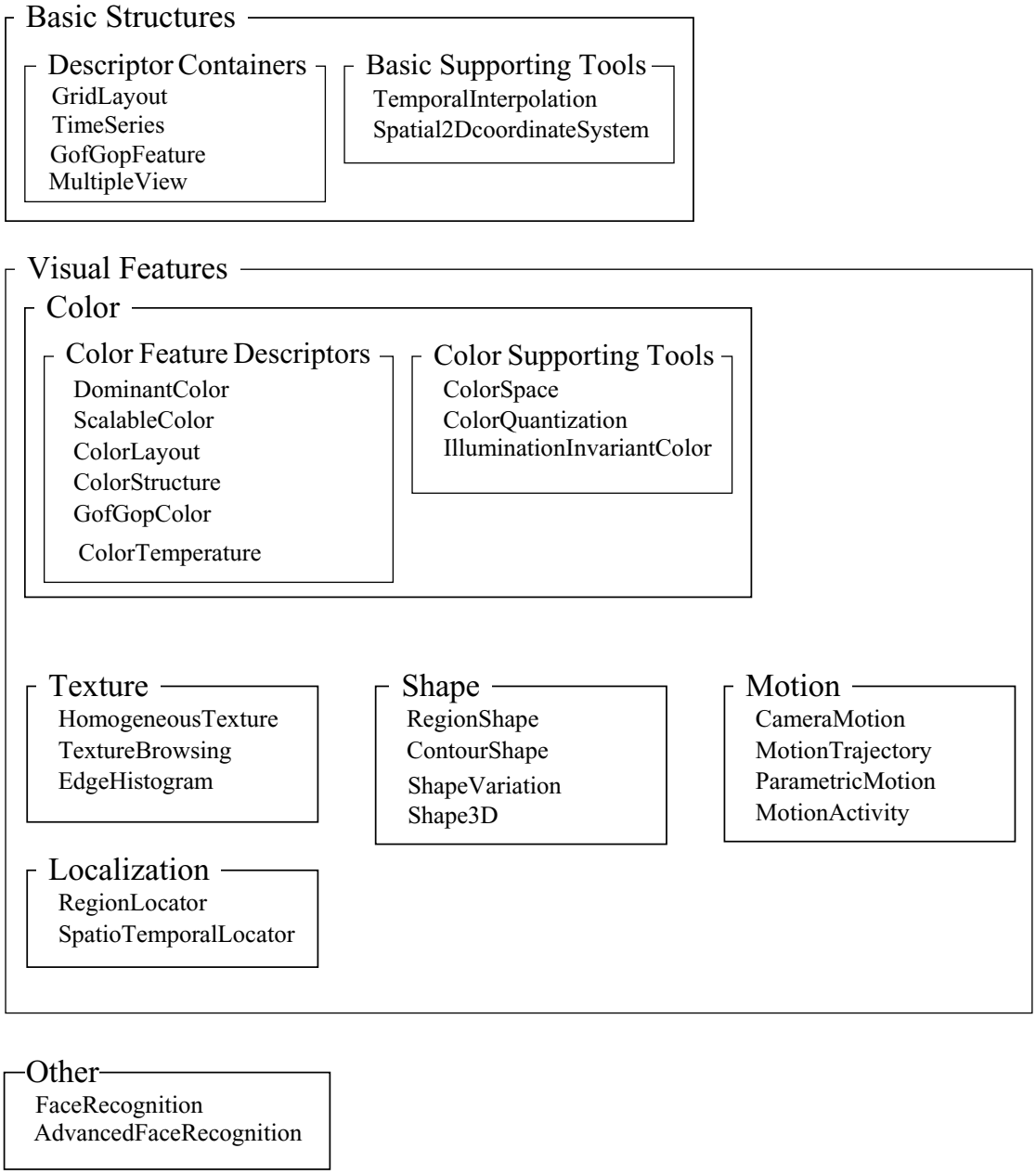

Figure 1 - Overview of Visual Description Tools

Extend the definitions in subclause 3.2:

NSVM Negative Shape Variation Map

© ISO/IEC 2004 — All rights reserved
Documents
Document Sharing Hub
Full document details: ISO_IEC 15938-3_2002_Amd 1_2004

SVM	Shape Variation Map
LDA	Linear Discriminant Analysis
PCA	Principal Component Analysis
PCLDA	Linear Discriminant Analysis of Principal Components
MIRED	MIcro REciprol Degree

Extend the definitions in subclause 3.3:

$\Re e[z]$	Real part of a complex value z
$\Im m[z]$	Imaginary part of a complex value z

Replace subclause 4.2.2 with:

4.2.2 Generic binary representation

The use of the video-specific syntax is signaled using the codec configuration mechanism defined in ISO/IEC 15938-1 and the following classification scheme is defined for this purpose.

```
<ClassificationScheme uri="urn:mpeg:mpeg7:cs:VisualDescriptorCodecCS:2001">
   <Term termID="1">
      <Name xml:lang="en">MPEG7CameraMotion</Name>
      <Definition xml:lang="en">ISO/IEC 15938-3 Binary Camera Motion
            Codec</Definition>
   </Term>
   <Term termID="2">
      <Name xml:lang="en">MPEG7ColorLayout</Name>
      <Definition xml:lang="en">ISO/IEC 15938-3 Binary Color Layout
            Codec</Definition>
   </Term>
   <Term termID="3">
      <Name xml:lang="en">MPEG7ColorQuantization</Name>
      <Definition xml:lang="en">ISO/IEC 15938-3 Binary Color Quantization
            Codec</Definition>
   </Term>
   <Term termID="4">
      <Name xml:lang="en">MPEG7ColorSpace</Name>
      <Definition xml:lang="en">ISO/IEC 15938-3 Binary Color Space
            Codec</Definition>
   </Term>
   <Term termID="5">
      <Name xml:lang="en">MPEG7ColorStructure</Name>
      <Definition xml:lang="en">ISO/IEC 15938-3 Binary Color Structure
            Codec</Definition>
   </Term>
   <Term termID="6">
      <Name xml:lang="en">MPEG7ContourShape</Name>
      <Definition xml:lang="en">ISO/IEC 15938-3 Binary Contour Shape
            Codec</Definition>
```

© ISO/IEC 2004 — All rights reserved

Documents
Document Sharing Hub
Full document details: ISO_IEC 15938-3_2002_Amd 1_2004

```
    </Term>
    <Term termID="7">
        <Name xml:lang="en">MPEG7DominantColor</Name>
        <Definition xml:lang="en">ISO/IEC 15938-3 Binary Dominant Color
              Codec</Definition>
    </Term>
    <Term termID="8">
        <Name xml:lang="en">MPEG7EdgeHistogram</Name>
        <Definition xml:lang="en">ISO/IEC 15938-3 Binary Edge Histogram
              Codec</Definition>
    </Term>
    <Term termID="9">
        <Name xml:lang="en">MPEG7FaceRecognition</Name>
        <Definition xml:lang="en">ISO/IEC 15938-3 Binary Face Recognition
              Codec</Definition>
    </Term>
    <Term termID="10">
        <Name xml:lang="en">MPEG7FoFGoPColor</Name>
        <Definition xml:lang="en">ISO/IEC 15938-3 Binary GoFGoP Color
              Codec</Definition>
    </Term>
    <Term termID="11">
        <Name xml:lang="en">MPEG7GridLayout</Name>
        <Definition xml:lang="en">ISO/IEC 15938-3 Binary Grid Layout
              Codec</Definition>
    </Term>
    <Term termID="12">
        <Name xml:lang="en">MPEG7HomogeneousTexture</Name>
        <Definition xml:lang="en">ISO/IEC 15938-3 Binary Homogeneous Texture
              Codec</Definition>
    </Term>
    <Term termID="13">
        <Name xml:lang="en">MPEG7IrregularVisualTimeSeries</Name>
        <Definition xml:lang="en">ISO/IEC 15938-3 Binary Irregular Time Series
              Codec</Definition>
    </Term>
    <Term termID="14">
        <Name xml:lang="en">MPEG7MotionActivity</Name>
        <Definition xml:lang="en">ISO/IEC 15938-3 Binary Motion Activity
              Codec</Definition>
    </Term>
    <Term termID="15">
        <Name xml:lang="en">MPEG7MotionTrajectory</Name>
        <Definition xml:lang="en">ISO/IEC 15938-3 Binary Motion Trajectory
              Codec</Definition>
    </Term>
    <Term termID="16">
        <Name xml:lang="en">MPEG7MultipleView</Name>
        <Definition xml:lang="en">ISO/IEC 15938-3 Binary Multiple View
              Codec</Definition>
    </Term>
    <Term termID="17">
        <Name xml:lang="en">MPEG7ParametricMotion</Name>
        <Definition xml:lang="en">ISO/IEC 15938-3 Binary Parametric Motion
              Codec</Definition>
    </Term>
    <Term termID="18">
        <Name xml:lang="en">MPEG7RegionLocator</Name>
        <Definition xml:lang="en">ISO/IEC 15938-3 Binary Region Locator
              Codec</Definition>
```


© ISO/IEC 2004 — All rights reserved
Documents
Document Sharing Hub
Full document details: ISO_IEC 15938-3_2002_Amd 1_2004

```
    </Term>
    <Term termID="19">
        <Name xml:lang="en">MPEG7RegionShape</Name>
        <Definition xml:lang="en">ISO/IEC 15938-3 Binary Region Shape
              Codec</Definition>
    </Term>
    <Term termID="20">
        <Name xml:lang="en">MPEG7RegularVisualTimeSeries</Name>
        <Definition xml:lang="en">ISO/IEC 15938-3 Binary Regular Time Series
              Codec</Definition>
    </Term>
    <Term termID="21">
        <Name xml:lang="en">MPEG7ScalableColor</Name>
        <Definition xml:lang="en">ISO/IEC 15938-3 Binary Scalable Color
              Codec</Definition>
    </Term>
    <Term termID="22">
        <Name xml:lang="en">MPEG7Shape3D</Name>
        <Definition xml:lang="en">ISO/IEC 15938-3 Binary Shape 3D
              Codec</Definition>
    </Term>
    <Term termID="23">
        <Name xml:lang="en">MPEG7Spatial2DCoordinateSystem</Name>
        <Definition xml:lang="en">ISO/IEC 15938-3 Binary Spatial 2D Coordinate
              System Codec</Definition>
    </Term>
    <Term termID="24">
        <Name xml:lang="en">MPEG7SpatioTemporalLocator</Name>
        <Definition xml:lang="en">ISO/IEC 15938-3 Binary SpatioTemporal Locator
              Codec</Definition>
    </Term>
    <Term termID="25">
        <Name xml:lang="en">MPEG7TemporalInterpolation</Name>
        <Definition xml:lang="en">ISO/IEC 15938-3 Binary Temporal Interpolation
              Codec</Definition>
    </Term>
    <Term termID="26">
        <Name xml:lang="en">MPEG7TextureBrowsing</Name>
        <Definition xml:lang="en">ISO/IEC 15938-3 Binary Texture Browsing
              Codec</Definition>
    </Term>
    <Term termID="27">
        <Name xml:lang="en">MPEG7GofGopFeature</Name>
        <Definition xml:lang="en">ISO/IEC 15938-3 Binary Gof Gop Feature
Codec</Definition>
    </Term>
    <Term termID="28">
        <Name xml:lang="en">MPEG7ColorTemperature</Name>
        <Definition xml:lang="en">ISO/IEC 15938-3 Binary Color Temperature
Codec</Definition>
    </Term>
    <Term termID="29">
        <Name xml:lang="en">MPEG7ShapeVariation</Name>
        <Definition xml:lang="en">ISO/IEC 15938-3 Binary Shape Variation
Codec</Definition>
    </Term>
    <Term termID="30">
        <Name xml:lang="en">MPEG7IlluminationInvariantColor</Name>
        <Definition xml:lang="en">ISO/IEC 15938-3 Binary Illumination Invariant
Color Codec</Definition>
```

Documents
Document Sharing Hub

© ISO/IEC 2004 — All rights reserved

Full document details: ISO_IEC 15938-3_2002_Amd 1_2004

```
    </Term>
    <Term termID="31">
        <Name xml:lang="en">MPEG7AdvancedFaceRecognition</Name>
        <Definition xml:lang="en">ISO/IEC 15938-3 Binary Advanced Face Recognition
Codec</Definition>
    </Term>
</ClassificationScheme>
```

Replace Table 1 in subclause 5.2.4 with:

Table 1 – Assignment of IDs to descriptors

ID	Descriptor
0	Forbidden
1	CameraMotion
2	ColorLayout
3	ColorSpace
4	ColorStructure
5	ColorQuantization
6	ContourShape
7	DominantColor
8	EdgeHistogram
9	FaceRecognition
10	GoFGoPColor
11	GridLayout
12	HomogeneousTexture
13	IrregularVisualTimeSeries
14	MotionActivity
15	MotionTrajectory
16	MultipleView
17	ParametricMotion
18	RegionLocator
19	RegionShape
20	RegularVisualTimeSeries
21	ScalableColor
22	Shape3D
23	Spatial2DCoordinateSystem
24	SpatioTemporalLocator
25	TemporalInterpolation
26	TextureBrowsing
27	GofGopFeature
28	ColorTemperature
29	ShapeVariation
30	IlluminationInvariantColor
31	AdvancedFaceRecognition
32-255	Reserved

Add after subclause 5.6:

5.7 GofGopFeature

5.7.1 Introduction

This container is a generic and extensible container to use several description tools defined in ISO/IEC 15938-3 to describe the representative feature over Group of Frames (GoF)/Group of Pictures (GoP). For the use to describe the transition of the feature through a video frame, VisualTimeSeries is much preferable.

© ISO/IEC 2004 — All rights reserved
Documents
Document Sharing Hub
Full document details: ISO_IEC 15938-3_2002_Amd 1_2004

5.7.2 DDL representation syntax

```
<!-- ################################################## -->
<!--  Definition of MPEG-7 GofGopFeature                 -->
<!-- ################################################## -->
<complexType name="GofGopFeature">
   <sequence>
      <element name="Descriptor" xsi:type="mpeg7:VisualDType"/>
   <sequence>
   <attribute name="aggregation" use="optional">
   <simpleType>
      <restriction base="string">
         <enumeration value="Average"/>
         <enumeration value="Median"/>
         <enumeration value="SplitMerge"/>
      </restriction>
   </simpleType>
   </attribute>
</complexType>
```

5.7.3 Binary representation syntax

GofGopFeature {	**Number of bits**	**Mnemonic**
AggregationFlag	1	bsbf
if(AggregationFlag){		
AggregationType	3	bsbf
}		
DescriptorID	8	uimsbf
SizeOfDescriptor	8	uimsbf
Descriptor	see subclauses 5 to 8	bsbf
}		

5.7.4 Descriptor component semantics

DescriptorID
This field, which is only present in the binary representation, specifies a descriptor identifier. The descriptor identifier indicates the descriptor type accommodated in this container. The assignment of IDs to the descriptors is specified in Table 1 in subclause 5.2.4. The available value of this field is 2 for Color Layout, 7 for Dominant Color, 8 for Edge Histogram, and 12 for Homogeneous Texture. The other values are prohibited.

SizeOfDescriptor
This field, which is only present in the binary representation, specifies a size of following descriptor in bytes.

Descriptor
This element represents the elementary feature using several description tools defined in ISO/IEC 15938-3. The applicable tools are Dominant Color, Color Layout, Edge Histogram and Homogeneous Texture which are specified in subclause 6.4, 6.6, 7.4 and 7.2, respectively. The size of this element shall be a multiple of 8 bits, and be equal to the value of SizeOfDescriptor element in bits. For the alignment of byte boundary, ‘0’ bits should be staffed just after the Descriptor bitstream.

AggregationFlag
This field signals the presence of aggregation attribute. If it is set to “1”, the aggregation attribute is following.

© ISO/IEC 2004 — All rights reserved

Documents
Document Sharing Hub
Full document details: ISO_IEC 15938-3_2002_Amd 1_2004

aggregation

This optional field specifies the aggregation method to create representative feature from the ones extracted from group of frames/pictures. The aggregation is performed over all the elementary descriptions of the group of video frames or images. One of the three types of aggregation presented below is allowed. If the aggregation is not explicitly specified, one of the allowed aggregation methods for the embeded descriptor is used.

Average

The average aggregation means that each element of the Descriptor is computed by accumulating the corresponding elements over group of frame/picture and subsequently normalizing each accumulated value by the number of the frames/pictures.

Median

The median aggregation means that each element of the Descriptor is obtained by constructing the ascending list of element values over the frame/picture, and assigning the median of this list to the representative value.

SplitMerge

The SplitMerge aggregation is allowed to be used only for Dominant Color. When this method is used, the descriptors are first extracted from all frames/pictures and then merged into a single descriptor consisting of all representative color values (“Value” elements in subclause 6.3). The size of the resulting descriptor is then brought down to the limit imposed by the syntax of DominantColor descriptor by iterative merging of the closest dominant color “Value” elements, where closeness is defined by Euclidean distance in color space. The values of the merged “Value” element fields are as follows:

$$W = \frac{w_1 + w_2}{N}$$

$$M = \frac{w_1 * m_1 + w_2 * m_2}{w_1 + w_2}$$

$$V = \frac{w_1 * v_1 + w_2 * v_2}{w_1 + w_2} + \frac{w_1 * w_2 * (m_1 - m_2)^2}{(w_1 + w_2)^2}$$

Where W , M , and V are the values of the “Percentage”, “Index”, and “ColorVariance” fields of the merged “Value” element, w_1, w_2, m_1, m_2, and v_1, v_2 are the corresponding fields of the elements being merged and N is the total number of frame/pictures. If SpatialCoherency field is used, it is simply averaged over all frames/pictures.

Note, the use of some of the aggregation methods is prohibited. The applicable methods for each description tool are specified using “Y” mark in Table Amd1-1.

Table Amd1-1 - Applicable Aggregation Methods

Description Tools	Average	Medium	SplitMerge
Color Layout	Y	Y	n/a
Edge Histogram	Y	Y	n/a
Homogeneous Texture	Y	Y	n/a
Dominant Color	n/a	n/a	Y

© ISO/IEC 2004 — All rights reserved

Documents
Document Sharing Hub
Full document details: ISO_IEC 15938-3_2002_Amd 1_2004

In the binary description, the following mapping table is used

AggregationType	Aggregation
000	Reserved
001	Average
010	Medium
011	SplitMerge
100-111	Reserved

Add after subclause 6.8:

6.9 Color Temperature

6.9.1 Introduction

This descriptor specifies the perceptual temperature feeling of illumination color in an image for browsing and display preference control purposes. Four perceptual temperature browsing categories are provided; hot, warm, moderate, and cool. Each category is used for browsing images based upon its perceptual meaning. This descriptor can be used to control the display quality of images or videos to either warmer or cooler direction so as to gratify user's preference.

6.9.2 DDL representation syntax

```
<!-- ##########################################################-->
<!--  Definition of MPEG-7 ColorTemperatureType            -->
<!-- ##########################################################-->

<complexType name="ColorTemperatureType" final="#all">
 <complexContent>
  <extension base="mpeg7:VisualDType">
   <sequence>
      <element name="BrowsingCategory">
         <simpleType>
            <restriction base="string">
               <enumeration value="hot"/>
               <enumeration value="warm"/>
               <enumeration value="moderate"/>
               <enumeration value="cool"/>
            </restriction>
         </simpleType>
      </element>
      <element name="SubRangeIndex" type="mpeg7:unsigned6"/>
   </sequence>
  </extension>
 </complexContent>
</complexType>
```

6.9.3 Binary representation syntax

ColorTemperature {	**Number of bits**	**Mnemonic**
BrowsingCategory	2	bslbf
SubRangeIndex	6	uimsbf
}		

© ISO/IEC 2004 — All rights reserved

Documents
Document Sharing Hub
Full document details: ISO_IEC 15938-3_2002_Amd 1_2004

6.9.4 Descriptor component semantics

BrowsingCategory
This element specifies the category of perceptual temperature. The color temperature in the range from 1667K (Kelvin) to 25000K estimates the illumination color of an image. The temperture value out of this range shall be clipped to the corresponding range boundary value. A color temperature value is rounded with the first digit under the decimal pointto be an integer. This color temperature range is divided and mapped into the 4 corresponding categories as defined in Table Amd1-2. The mapping between binary representation and semantics is also provided in Table Amd1-2.

Table Amd1-2- Semantics of the Browsing Category field

Browsing Category	Semantics	Temperature Range
00	Hot	Temperature < 2251K
01	Warm	2251K ≤ Temperature < 4171K
10	Moderate	4171K ≤ Temperature < 8061K
11	Cool	8061K ≤ Temperature

SubrangeIndex
This element specifies the sub-range index inside each browsing category. The temperature range for each category is uniformly quantized into 64 sub-ranges in MIRED (M/K^{-1}). The color temperature range corresponding to each subrangeindex is provided in Table Amd1-3. A color temperature value is rounded with the first digit under the decimal point to be an integer.

Table Amd1-3 - SubrangeIndex and its color temperature range for each category

Index	Hot	Warm	Moderate	Cool
000000	[1667,1674)	[2251,2267)	[4171,4203)	[8061,8147)
000001	[1674,1681)	[2267,2284)	[4203,4235)	[8147,8235)
000010	[1681,1687)	[2284,2301)	[4235,4268)	[8235,8325)
000011	[1687,1694)	[2301,2318)	[4268,4301)	[8325,8417)
000100	[1694,1701)	[2318,2335)	[4301,4334)	[8417,8512)
000101	[1701,1709)	[2335,2352)	[4334,4369)	[8512,8608)
000110	[1709,1716)	[2352,2370)	[4369,4403)	[8608,8706)
000111	[1716,1723)	[2370,2388)	[4403,4439)	[8706,8807)
001000	[1723,1730)	[2388,2407)	[4439,4475)	[8807,8910)
001001	[1730,1737)	[2407,2425)	[4475,4511)	[8910,9015)
001010	[1737,1745)	[2425,2444)	[4511,4548)	[9015,9123)
001011	[1745,1752)	[2444,2464)	[4548,4586)	[9123,9234)
001100	[1752,1760)	[2464,2483)	[4586,4624)	[9234,9347)
001101	[1760,1767)	[2483,2503)	[4624,4663)	[9347,9464)
001110	[1767,1775)	[2503,2523)	[4663,4703)	[9464,9583)
001111	[1775,1782)	[2523,2544)	[4703,4743)	[9583,9705)
010000	[1782,1790)	[2544,2564)	[4743,4784)	[9705,9830)
010001	[1790,1798)	[2564,2586)	[4784,4826)	[9830,9959)
010010	[1798,1806)	[2586,2607)	[4826,4868)	[9959,10091)
010011	[1806,1814)	[2607,2629)	[4868,4912)	[10091,10226)
010100	[1814,1822)	[2629,2651)	[4912,4956)	[10226,10366)
010101	[1822,1830)	[2651,2674)	[4956,5000)	[10366,10509)
010110	[1830,1838)	[2674,2697)	[5000,5046)	[10509,10656)
010111	[1838,1846)	[2697,2720)	[5046,5092)	[10656,10807)
011000	[1846,1855)	[2720,2744)	[5092,5140)	[10807,10962)
011001	[1855,1863)	[2744,2769)	[5140,5188)	[10962,11123)

© ISO/IEC 2004 — All rights reserved
Documents
Document Sharing Hub
Full document details: ISO_IEC 15938-3_2002_Amd 1_2004

011010	[1863,1872)	[2769,2793)	[5188,5237)	[11123,11287)
011011	[1872,1880)	[2793,2818)	[5237,5287)	[11287,11457)
011100	[1880,1889)	[2818,2844)	[5287,5338)	[11457,11632)
011101	[1889,1897)	[2844,2870)	[5338,5390)	[11632,11813)
011110	[1897,1906)	[2870,2897)	[5390,5443)	[11813,11999)
011111	[1906,1915)	[2897,2924)	[5443,5497)	[11999,12191)
100000	[1915,1924)	[2924,2951)	[5497,5552)	[12191,12389)
100001	[1924,1933)	[2951,2979)	[5552,5609)	[12389,12594)
100010	[1933,1942)	[2979,3008)	[5609,5666)	[12594,12806)
100011	[1942,1951)	[3008,3037)	[5666,5725)	[12806,13025)
100100	[1951,1961)	[3037,3067)	[5725,5785)	[13025,13252)
100101	[1961,1970)	[3067,3097)	[5785,5846)	[13252,13487)
100110	[1970,1980)	[3097,3128)	[5846,5908)	[13487,13730)
100111	[1980,1989)	[3128,3160)	[5908,5972)	[13730,13982)
101000	[1989,1999)	[3160,3192)	[5972,6037)	[13982,14244)
101001	[1999,2009)	[3192,3225)	[6037,6104)	[14244,14515)
101010	[2009,2018)	[3225,3259)	[6104,6172)	[14515,14797)
101011	[2018,2028)	[3259,3293)	[6172,6241)	[14797,15090)
101100	[2028,2038)	[3293,3328)	[6241,6313)	[15090,15396)
101101	[2038,2049)	[3328,3364)	[6313,6385)	[15396,15713)
101110	[2049,2059)	[3364,3400)	[6385,6460)	[15713,16044)
101111	[2059,2069)	[3400,3437)	[6460,6536)	[16044,16390)
110000	[2069,2080)	[3437,3476)	[6536,6615)	[16390,16750)
110001	[2080,2090)	[3476,3515)	[6615,6695)	[16750,17127)
110010	[2090,2101)	[3515,3554)	[6695,6777)	[17127,17521)
110011	[2101,2112)	[3554,3595)	[6777,6861)	[17521,17934)
110100	[2112,2122)	[3595,3637)	[6861,6947)	[17934,18367)
110101	[2122,2133)	[3637,3680)	[6947,7035)	[18367,18821)
110110	[2133,2145)	[3680,3724)	[7035,7126)	[18821,19298)
110111	[2145,2156)	[3724,3768)	[7126,7219)	[19298,19799)
111000	[2156,2167)	[3768,3814)	[7219,7314)	[19799,20328)
111001	[2167,2179)	[3814,3861)	[7314,7412)	[20328,20886)
111010	[2179,2190)	[3861,3910)	[7412,7513)	[20886,21475)
111011	[2190,2202)	[3910,3959)	[7513,7616)	[21475,22098)
111100	[2202,2214)	[3959,4010)	[7616,7722)	[22098,22758)
111101	[2214,2226)	[4010,4062)	[7722,7832)	[22758,23459)
111110	[2226,2238)	[4062,4115)	[7832,7944)	[23459,24205)
111111	[2238,2251)	[4115,4171)	[7944,8061)	[24205,25001)

6.10 Illumination Invariant Color

6.10.1 Introduction

This descriptor wraps the color descriptors in ISO/IEC 15938-3 that are Dominant Color, Scalable Color, Color Layout, and Color Structure. Before extracting one of the DominantColor, ScalableColor, ColorLayout, and ColorStructure from an image, the pixel values shall be converted using a tranformation which correspons to changing the illumination to 6500K on the daylight locus.

© ISO/IEC 2004 — All rights reserved

Documents
Document Sharing Hub
Full document details: ISO_IEC 15938-3_2002_Amd 1_2004

6.10.2 DDL representation syntax

```
<!-- ################################################ -->
<!-- Definition of MPEG-7 IlluminationInvariantColorType -->
<!-- ################################################ -->
<complexType name="IlluminationInvariantColorType" >
   <choice>
      <element name="DominantColor" type="mpeg7:DominantColorType"/>
      <element name="ScalableColor" type="mpeg7:ScalableColorType"/>
      <element name="ColorLayout" type="mpeg7:ColorLayoutType"/>
      <element name="ColorStructure" type="mpeg7:ColorStructureType"/>
   </choice>
</complexType>
```

6.10.3 Binary representation syntax

IlluminationInvariantColor {	**Number of bits**	**Mnemonic**
DescriptorID	**8**	**uimsbf**
SizeOfDescriptor	**8**	**uimsbf**
Descriptor	**see subclauses 6.4 to 6.7**	**bsbf**
}		

6.10.4 Descriptor component semantics

DescriptorID
This field, which is only present in the binary representation, specifies a descriptor identifier. The descriptor identifier indicates the descriptor type accommodated in this container. The assignment of IDs to the descriptors is specified in Table 1 in subclause 5.2.4. The available value of this field is 2 for Color Layout, 4 for Color Structure, 7 for Dominant Color, 21 for Scalable Color. The other values are prohibited.

SizeOfDescriptor
This field, which is only present in the binary representation, specifies a size of following descriptor in bytes.

Descriptor
This element represents the elementary feature using several description tools defined in ISO/IEC 15938-3. The applicable tools are Dominant Color, Scalable Color, Color Layout, and Color Structure which are specified in subclause 6.4, 6.5, 6.6, and 6.7, respectively. If DominantColor is instantiated in this tool, the ColorReferenceFlag shall be set to the default value. The size of this element shall be a multiple of 8 bits, and be equal to the value of **SizeOfDescriptor** element in bits. For the alignment of byte boundary, ‘0’ bits should be staffed just after the **Descriptor** bitstream.

© ISO/IEC 2004 — All rights reserved
Documents
Document Sharing Hub
Full document details: ISO_IEC 15938-3_2002_Amd 1_2004

Add after subclause 8.4:

8.5 Shape Variation

The descriptor can describe shape variations in terms of Shape Variation Map and the statistics of the region shape description of each binary shape image in the collection. Shape Variation Map consists of StaticShapeVariation and DynamicShapeVariation. The former corresponds to 35 quantized ART coefficients on a 2-dimensional histogram of group of shape images and the latter to the inverse of the histogram except the background. For the statistics, a set of standard deviations of 35 coefficients of the Region Shape, which is defined in ISO/IEC 15938-3 are used.

8.5.1 DDL representation syntax

```
<!-- ################################################## -->
<!--  Definition of MPEG-7 ShapeVariationType   -->
<!-- ################################################## -->

<complexType name="ShapeVariationType" final="#all">
   <complexContent>
      <extension base="mpeg7:VisualDType">
         <sequence>
            <element name="StaticShapeVariation">
               <simpleType>
                  <restriction>
                     <simpleType>
                        <list itemType="mpeg7:unsigned4"/>
                     </simpleType>
                     <length value="35"/>
                  </restriction>
               </simpleType>
            </element>
            <element name="DynamicShapeVariation">
               <simpleType>
                  <restiction>
                     <simpleType>
                        <list itemType="mpeg7:unsigned4"/>
                     </simpleType>
                     <length value="35"/>
                  </restriction>
               </simpleType>
            </element>
            <element name="StatisticalVariation">
               <simpleType>
                  <resitiction>
                     <simpleType>
                        <list itemType="mpeg7:unsigned4"/>
                     </simpleType>
                     <length value="35"/>
                  </restriction>
               </simpleType>
            </element>
         </sequence>
      </extension>
   </complexContent>
</complexType>
```

© ISO/IEC 2004 — All rights reserved

Documents
Document Sharing Hub
Full document details: ISO_IEC 15938-3_2002_Amd 1_2004

8.5.2 Binary representation syntax

Shape Variation {	**Number of bits**	**Mnemonic**
for(k=0; k<35; k++) {		
StaticShapeVariation[k]	4	uimsbf
}		
for(k=0; k<35; k++) {		
DynamicShapeVariation[k]	4	uimsbf
}		
for(k=0; k<35; k++) {		
StatisticalVariation[k]	4	uimsbf
}		
}		

8.5.3 Descriptor component semantics

StaticShapeVariation
This is an array of 35 normalized and quantized magnitudes of the ART coefficients on the accumulated binary shape images (called Shape Variation Map: SVM) which can be considered as a two-dimensional histogram. The number of each bin in the histogram corresponds to the frequency how often the object appears at the pixel location throughout the sequence. The maximum number in the bin implies that a part of the object appears at the location all the time, or becomes static through out the whole sequence. Higher is the value of a pixel in SVM, the degree of being static of the object at the pixel location. Hence the name StaticShapeVariation is used for the array to describe the histogram. The relationship between the order of k and the order of radial and angular indices (n,m) is as follows:

k	0	1	2	3	4	5	6	…	31	32	33	34
n	1	2	3	0	1	2	3	…	0	1	2	3
m	0	0	0	1	1	1	1	…	8	8	8	8

StaticShapeVariation[k] is obtained by quantizing of the ART coefficient into 4 bits. Quantization range and reconstruction values are listed in Table Amd1-4 and Table Amd1-, respectively.

DynamicShapeVariation
Similar to the StaticShapeVariation, this is an array of 35 normalized and quantized magnitudes of the region shape coefficients on the inverted cumulated image (NSVM: Negative Shape Variation Map) or 2-D histogram except the background. Hence the term DynamicShapeVariation is used to contrast with the StaticShapeVariation. Normalization, quantization and indexing scheme are the same as in StaticShapeVariation.

StatisticalVariation
This is an array of 35 quantized values of the set of standard deviations of each coefficients described by the region shape descriptor in each frame. Quantization and indexing scheme are the same as in StaticShapeVariation.

Table Amd1-4 - Quantization table

Range	index
0.000000000 ≤ value < 0.003073263	0000
0.003073263 ≤ value < 0.006358638	0001
0.006358638 ≤ value < 0.009887589	0010
0.009887589 ≤ value < 0.013699146	0011
0.013699146 ≤ value < 0.017842545	0100
0.017842545 ≤ value < 0.022381125	0101

© ISO/IEC 2004 — All rights reserved
Documents
Document Sharing Hub
Full document details: ISO_IEC 15938-3_2002_Amd 1_2004

0.022381125 ≤ value < 0.027398293	0110
0.027398293 ≤ value < 0.033007009	0111
0.033007009≤ value < 0.039365646	1000
0.039365646≤ value < 0.046706155	1001
0.046706155≤ value < 0.055388134	1010
0.055388134≤ value < 0.066014017	1011
0.066014017≤ value < 0.079713163	1100
0.079713163≤ value < 0.099021026	1101
0.099021026≤ value < 0.132028034	1110
0.132028034≤ value	1111

Table Amd1-5 - Reconstruction value for 4bit quantized value

Quantization index	Reconstruction value
0000	0.001511843
0001	0.004687623
0010	0.008090430
0011	0.011755242
0100	0.015725795
0101	0.020057784
0110	0.024823663
0111	0.030120122
1000	0.036080271
1001	0.042894597
1010	0.050849554
1011	0.060405301
1100	0.072372655
1101	0.088395142
1110	0.112720172
1111	0.165035042

Add after subclause 11.1:

11.2 AdvancedFaceRecognition

11.2.1 Introduction

Advanced Face Recognition Descriptor is a descriptor of face identity robust to variations in pose and illumination conditions.

11.2.2 DDL representation syntax

```
<complexType name="AdvancedFaceRecognitionType" final="#all">
   <complexContent>
      <extension base="mpeg7:VisualDType">
         <sequence>
            <element name="FourierFeature">
               <simpleType>
                  <restriction>
                     <simpleType>
                        <list itemType="mpeg7:unsigned5"/>
                     </simpleType>
                     <minLength value="24"/>
```

© ISO/IEC 2004 — All rights reserved

Documents
Document Sharing Hub
Full document details: ISO_IEC 15938-3_2002_Amd 1_2004

```
                        <maxLength value="63"/>
                    </restriction>
                </simpleType>
            </element>
            <element name="CentralFourierFeature">
                <simpleType>
                    <restriction>
                        <simpleType>
                            <list itemType="mpeg7:unsigned5"/>
                        </simpleType>
                        <minLength value="24"/>
                        <maxLength value="63"/>
                    </restriction>
                </simpleType>
            </element>
            <sequence minOccurs="0">
                <element name="CompositeFeature">
                    <simpleType>
                        <restriction>
                            <simpleType>
                                <list itemType="mpeg7:unsigned5"/>
                            </simpleType>
                            <minLength value="0"/>
                            <maxLength value="63"/>
                        </restriction>
                    </simpleType>
                </element>
                <element name="SubregionCompositeFeature">
                    <simpleType>
                        <restriction>
                            <simpleType>
                                <list itemType="mpeg7:unsigned5"/>
                            </simpleType>
                            <minLength value="0"/>
                            <maxLength value="63"/>
                        </restriction>
                    </simpleType>
                </element>
            </sequence>
        </sequence>
    </complexContent>
  </extension>
</complexType>
```


© ISO/IEC 2004 — All rights reserved
Documents
Document Sharing Hub
Full document details: ISO_IEC 15938-3_2002_Amd 1_2004

11.2.3 Binary representation syntax

AdvancedFaceRecognition{	Number of bits	Mnemonic
numOfFourierFeature	**6**	**uimsbf**
numOfCentralFourierFeature	**6**	**uimsbf**
extensionFlag	**1**	**bsblf**
for(k=0; k<numOfFourierFeature; k++){		
FourierFeature[k]	**5**	**uimsbf**
}		
for(k=0; k<numOfCentralFourierFeature; k++){		
CentralFourierFeature[k]	**5**	**uimsbf**
}		
if (extensionFlag==”1”){		
numOfCompositeFeature	**6**	**uimsbf**
numOfSubregionCompositeFeature	**6**	**uimsbf**
for (k=0; k< numOfCompositeFeature; k++){		
CompositeFeature[k]	**5**	**uimsbf**
}		
for (k=0; k< numOfSubregionCompositeFeature; k++){		
SubregionCompositeFeature[k]	**5**	**uimsbf**
}		
}		
}		

11.2.4 Descriptor component semantics

numOfFourierFeature
This field specifies the number of components in FourierFeature. The allowed range is from 24 to 63.

numOfCentralFourierFeature
This field specifies the number of components in CentralFourierFeature. The allowed range is from 24 to 63.

extensionFlag
This field specifies existence of CompositeFeature and SubregionCompositeFeature. “1” indicates their presence, “0” does their absence. If extensionFlag is set to 1, either numOfCompositeFeature or numOfSubregionCompositeFeature shall be non-zero value.

FourierFeature
This element represents a facial feature based on the cascaded LDA of the Fourier characteristics of a normalized face image. The normalized face image is obtained by scaling an original image into 56 lines with 46 luminance values in each line. The center positions of two eyes in the normalized face image shall be located on the 24th row and the 16th and 31st columns for the right and left eyes respectively.

The FourierFeature element is derived from two feature vectors; one is a Fourier Spectrum Vector $\boldsymbol{x}_1^f$, and the other is a Multi-block Fourier Amplitude Vector $\boldsymbol{x}_2^f$. Figure Amd1-1 illustrates the extraction process of FourierFeature. Given a normalized face image, five steps should be performed to extract the element;

(1) Extraction of a Fourier Spectrum Vector $\boldsymbol{x}_1^f$,

© ISO/IEC 2004 — All rights reserved

Documents
Document Sharing Hub
Full document details: ISO_IEC 15938-3_2002_Amd 1_2004

(2) Extraction of a Multi-block Fourier Amplitude Vector $\boldsymbol{x}_2^f$,

(3) Projections of the feature vectors using PCLDA basis matrices $\boldsymbol{\Psi}_1^f$, $\boldsymbol{\Psi}_2^f$, and their normalization to unit vectors $\boldsymbol{y}_1^f$, $\boldsymbol{y}_2^f$,

(4) Projection of a Joint Fourier Vector $\boldsymbol{y}_3^f$ of the unit vectors using an LDA basis matrix $\boldsymbol{\Psi}_3^f$,

(5) Quantization of the projected vector $\boldsymbol{z}^f$.

© ISO/IEC 2004 — All rights reserved
Documents
Document Sharing Hub
Full document details: ISO_IEC 15938-3_2002_Amd 1_2004

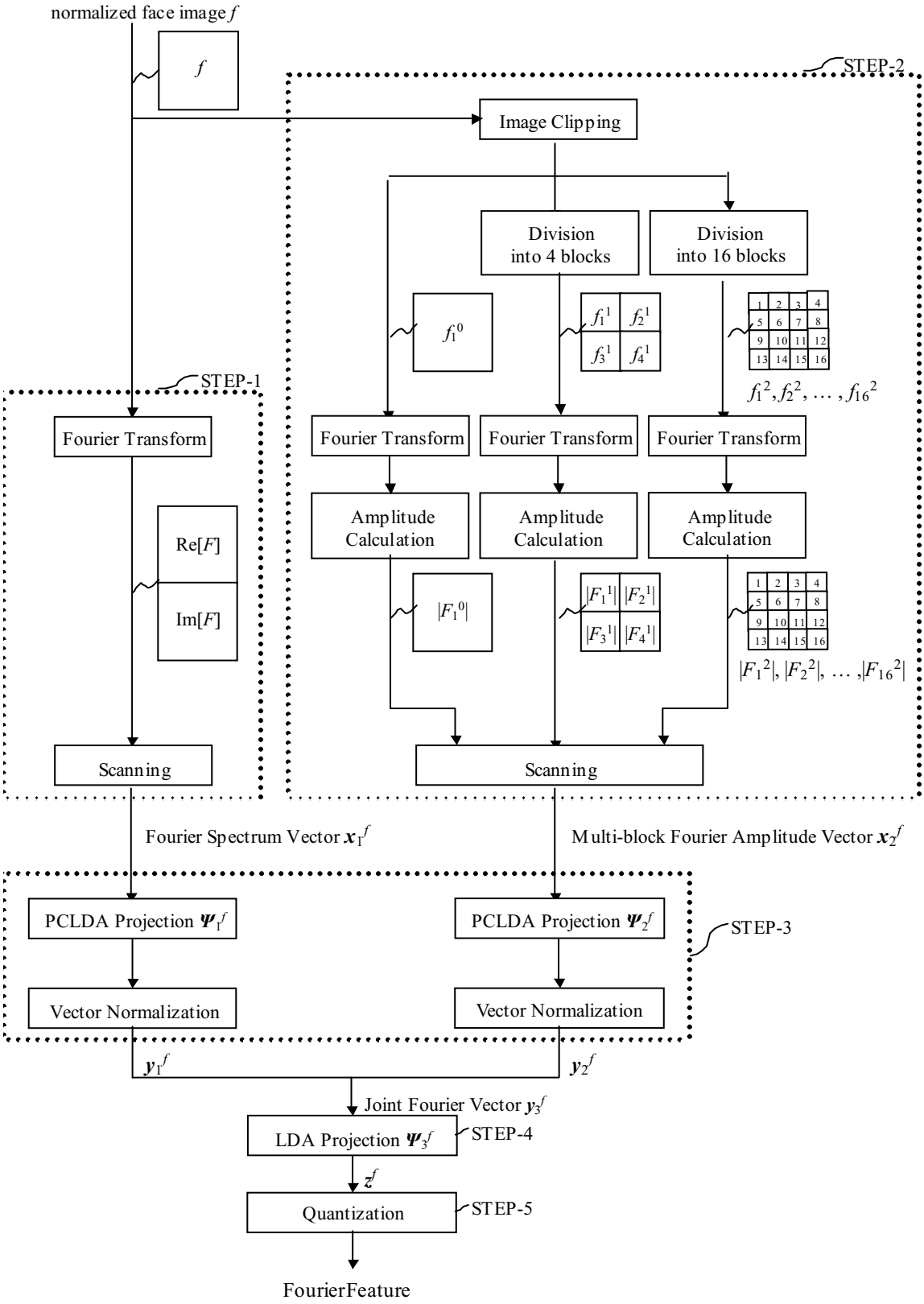

Figure Amd1-1 - Extraction of FourierFeature.

© ISO/IEC 2004 — All rights reserved

Documents
Document Sharing Hub
Full document details: ISO_IEC 15938-3_2002_Amd 1_2004

STEP 1) Extraction of Fourier Spectrum Vector

Given a normalized face image $f(x,y)$, the Fourier spectrum $F(u,v)$ of $f(x,y)$ is calculated by

$$F(u,v)=\sum_{x=0}^{M-1}\sum_{y=0}^{N-1} f(x,y)\exp\left(-2\pi i\left(\frac{xu}{M}+\frac{yv}{N}\right)\right) \quad (u=0,\cdots,M-1; v=0,\cdots,N-1).$$

Here, M =46, N =56. A Fourier Spectrum Vector $\boldsymbol{x}_1^f$ is defined as a set of scanned components of the Fourier spectrum. Figure Amd1-2 shows the scanning method of the Fourier spectrum. The scanning shall be performed only on two rectangle regions, region A and region B, in the Fourier domain. The scanning rule is concluded in Table Amd1-6. Here, S_R (u, v) denotes the top-left coordinate of region R and E_R (u,v) does the bottom-right point of region R, respectively. Therefore, the Fourier Spectrum Vector $\boldsymbol{x}_1^f$ is expressed by

$$\boldsymbol{x}_1^f=\begin{pmatrix} \Re e[F(0,0)] \\ \vdots \\ \Re e[F(11,0)] \\ \Re e[F(35,0)] \\ \vdots \\ \Re e[F(45,0)] \\ \vdots \\ \Re e[F(45,13)] \\ \Im m[F(0,0)] \\ \vdots \\ \Im m[F(11,0)] \\ \Im m[F(35,0)] \\ \vdots \\ \Im m[F(45,0)] \\ \vdots \\ \Im m[F(45,13)] \end{pmatrix}.$$

The dimension of $\boldsymbol{x}_1^f$ is $2*(M/2)*(N/4)$, i.e., 644.

STEP 2) Extraction of Multi-block Fourier Amplitude Vector

A Multi-block Fourier Amplitude Vector is extracted from the Fourier amplitudes of partial images in the normalized face image. As the partial images, three types of images are used; (a) a holistic image, (b) quarter images, and (c) 1/16 images.

(a) holistic image

A holistic image $f_1^0(x,y)$ is obtained by clipping the normalized face image $f(x,y)$ into 44x56 image size removing boundary columns in both sides. It is given by

$$f_1^0(x,y)=f(x+1,y) \qquad (x=0,1,\cdots,43;\ y=0,1,\cdots,55).$$

(b) quarter images

Quarter images are obtained by dividing the holistic image $f_1^0(x,y)$ equally into 4 blocks $f_k^1(x,y)$ (k =1,2,3,4) given by

$$f_k^1(x,y)=f_1^0(x+22s_k^1, y+28t_k^1) \qquad (x=0,1,\cdots,21; y=0,1,\cdots,27),$$

where $s_k^1=(k-1)\%2$ and $t_k^1=(k-1)/2$.

© ISO/IEC 2004 — All rights reserved

Documents
Document Sharing Hub
Full document details: ISO_IEC 15938-3_2002_Amd 1_2004

(c) one-sixteenth images

One-sixteenth images are obtained by dividing $f_1^0(x,y)$ equally into 16 blocks $f_k^2(x,y)$ (k =1,2,3, …, 16) given by

$$f_k^2(x,y) = f_1^0(x+11s_k^2, y+14t_k^2) \quad (x=0,1,\cdots,10; y=0,1,\cdots,13),$$

where $s_k^2 = (k-1)\%4$ and $t_k^2 = (k-1)/4$.

From these images, Fourier amplitudes $\left|F_k^j(u,v)\right|$ are calculated as follows:

$$F_k^j(u,v) = \sum_{x=0}^{M^j-1}\sum_{y=0}^{N^j-1} f_k^j(x,y)\exp\left(-2\pi i\left(\frac{xu}{M^j}+\frac{yv}{N^j}\right)\right),$$

$$\left|F_k^j(u,v)\right| = \sqrt{\Re e\left[F_k^j(u,v)\right]^2 + \Im m\left[F_k^j(u,v)\right]^2}.$$

M^j denotes the width of each partial image, that is, M^0 =44, M^1 =22, and M^2 =11. N^j denotes the height of each partial image, that is, N^0 =56, N^1 =28, and N^2 =14.

The Multi-block Fourier Amplitude Vector is obtained by scanning low frequency regions of each amplitude $\left|F_k^j(u,v)\right|$ in order as 1) the holistic image (k=1), 2) the quarter images (k=1,2,3,4), and 3) the one-sixteenth images (k=1,2,…,16). The scan regions are defined in Table Amd1-6.

Therefore, the Multi-block Fourier Amplitude Vector $\boldsymbol{x}_2^f$ is expressed as follow:

$$\boldsymbol{x}_2^f = \begin{pmatrix} \left|F_1^0(0,0)\right| \\ \vdots \\ \left|F_1^0(43,13)\right| \\ |F_1^1(0,0)| \\ \vdots \\ |F_1^1(21,6)| \\ |F_2^1(0,0)| \\ \vdots \\ |F_2^1(21,6)| \\ |F_3^1(0,0)| \\ \vdots \\ |F_4^1(21,6)| \\ |F_1^2(0,0)| \\ \vdots \\ |F_{16}^2(10,2)| \end{pmatrix}.$$

The dimension of $\boldsymbol{x}_2^f$ is $(M^0/2)*(N^0/4)+4*(M^1/2)*(N^1/4)+16*(M^2/2)*(N^2/4)$, i.e., 856.

© ISO/IEC 2004 — All rights reserved

Documents
Document Sharing Hub
Full document details: ISO_IEC 15938-3_2002_Amd 1_2004

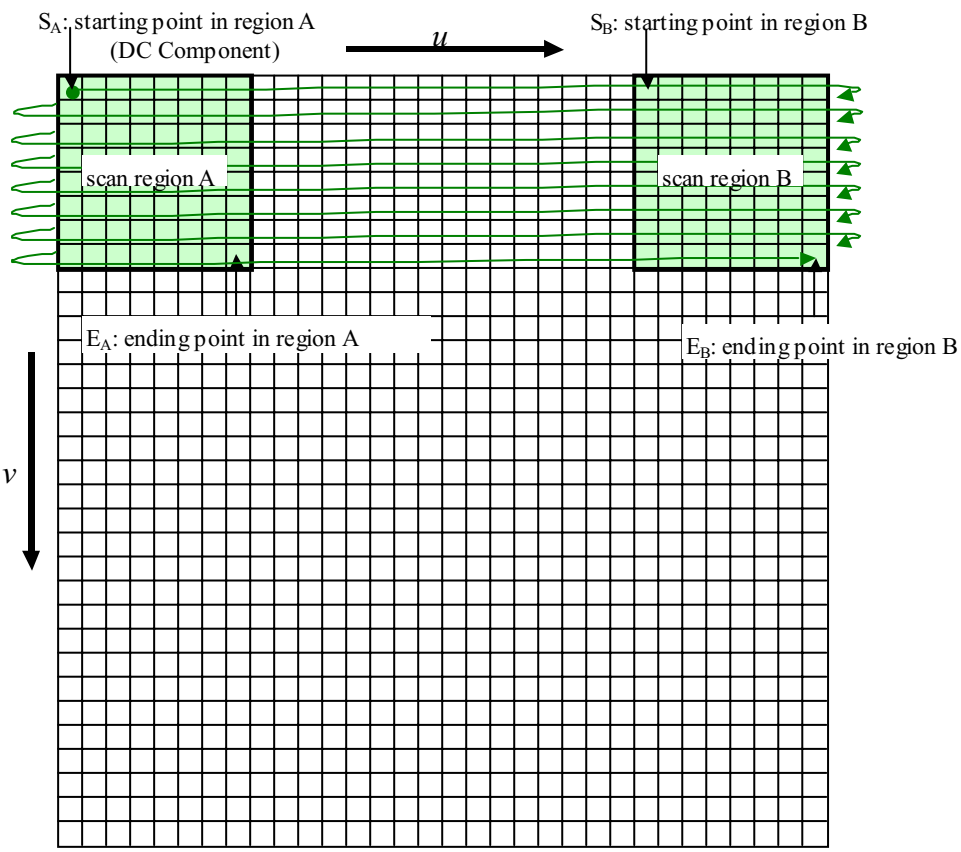

Figure Amd1-2 - Definition of scanning in the Fourier domain.

Table Amd1-6 - Scan regions in Fourier domain for the FourierFeature element.

feature vector	elements of feature vector	scan region A		scan region B		vector dimension		
		S_A	E_A	S_B	E_B	subtotal	# of blocks	total
Fourier Spectrum vector $\boldsymbol{x}_1^f$	$\Re e[F(u,v)]$	(0,0)	(11,13)	(35,0)	(45,13)	322	-	644
	$\Im m[F(u,v)]$	(0,0)	(11,13)	(35,0)	(45,13)	322	-	
Multi-block Fourier Amplitude vector $\boldsymbol{x}_2^f$	$\lvert F_1^0(u,v)\rvert$	(0,0)	(10,13)	(33,0)	(43,13)	308	1	856
	$\lvert F_k^1(u,v)\rvert$	(0,0)	(5,6)	(17,0)	(21,6)	77	4	
	$\lvert F_k^2(u,v)\rvert$	(0,0)	(2,2)	(9,0)	(10,2)	15	16	

STEP 3) PCLDA projection and normalization

The Fourier Spectrum Vector $\boldsymbol{x}_1^f$ and the Multi-block Fourier Amplitude Vector $\boldsymbol{x}_2^f$ shall be respectively projected using PCLDA basis matrices $\boldsymbol{\Psi}_1^f$ and $\boldsymbol{\Psi}_2^f$, and normalized to unit vectors $\boldsymbol{y}_1^f$ and $\boldsymbol{y}_2^f$. The normalized vector $\boldsymbol{y}_k^f$ (k=1,2) is given by

© ISO/IEC 2004 — All rights reserved
Documents
Document Sharing Hub
Full document details: ISO_IEC 15938-3_2002_Amd 1_2004

$$\boldsymbol{y}_k^f = \frac{\boldsymbol{\Psi}_k^{f^T} \boldsymbol{x}_k^f - \boldsymbol{m}_k^f}{\left| \boldsymbol{\Psi}_k^{f^T} \boldsymbol{x}_k^f - \boldsymbol{m}_k^f \right|},$$

where the PCLDA basis matrices $\boldsymbol{\Psi}_k^f$ and the mean vectors $\boldsymbol{m}_k^f$ are defined in Annex D. The dimensions of $\boldsymbol{y}_1^f$ and $\boldsymbol{y}_2^f$ are 70 and 80, respectively.

STEP 4) LDA projection of Joint Fourier vector

The normalized Vectors $\boldsymbol{y}_1^f$ and $\boldsymbol{y}_2^f$ are combined to form a 150-dimensional Joint Fourier Vector $\boldsymbol{y}_3^f$, and projected using the LDA basis matrix $\boldsymbol{\Psi}_3^f$ defined in Annex D. The projected vector $\boldsymbol{z}^f$ is given by

$$\begin{aligned} \boldsymbol{z}^f &= \boldsymbol{\Psi}_3^{f^T} \boldsymbol{y}_3^f \\ &= \boldsymbol{\Psi}_3^{f^T} \begin{pmatrix} \boldsymbol{y}_1^f \\ \boldsymbol{y}_2^f \end{pmatrix}. \end{aligned}$$

STEP 5) Quantization

Each element of $\boldsymbol{z}^f$ is clipped in the range of 5bit-unsigned integer using the following equation:

$$w_i^f = \begin{cases} 0, & \text{if} \quad z_i^f < -16 \\ 31, & \text{if} \quad z_i^f > 15 \\ \text{floor}(z_i^f + 16). & \text{otherwise} \end{cases}$$

The quantized elements are stored as FourierFeature. FourierFeature[0] represents the first quantized element w_0^f, and FourierFeature[numOfFourierFeature-1] corresponds to the *numOfFourierFeature*-th element $w_{\text{numOfFourierFeature}-1}^f$.

CentralFourierFeature

This element represents a facial feature based on the cascaded LDA of the Fourier characteristics of the central part in the normalized face image. CentralFourierFeature is extracted in the similar way as FourierFeature.

The central part $g(x, y)$ is obtained by clipping the image $f(x, y)$ into 32x32 image size starting at (7,12) as follows:

$$g(x, y) = f(x + 7, y + 12) \quad (x = 0,1,\cdots,31; y = 0,1,\cdots,31).$$

STEP 1) Extraction of Central Fourier Spectrum Vector

The Fourier spectrum $G(u, v)$ of $g(x, y)$ is calculated by

$$G(u, v) = \sum_{x=0}^{M-1} \sum_{y=0}^{N-1} g(x, y) \exp\left(-2\pi i \left(\frac{xu}{M} + \frac{yv}{N} \right) \right) \quad (u = 0, \cdots, M-1; v = 0, \cdots, N-1),$$

where, M =32, and N =32. A 256-dimensional Central Fourier Spectrum Vector $\boldsymbol{x}_1^g$ is produced by scanning the Fourier spectrum $G(u, v)$ as defined in Table Amd1-7.

© ISO/IEC 2004 — All rights reserved

Documents
Document Sharing Hub
Full document details: ISO_IEC 15938-3_2002_Amd 1_2004

Table Amd1-7 - Scan regions in Fourier domain for the CentralFourierFeature element.

feature vector	elements of feature vector	scan region A		scan region B		vector dimension		
		S_A	E_A	S_B	E_B	subtotal	# of blocks	total
Central Fourier Spectrum Vector $\boldsymbol{x}_1^g$	$\Re e[G(u,v)]$	(0,0)	(7,7)	(24,0)	(31,7)	128	-	256
	$\Im m[G(u,v)]$	(0,0)	(7,7)	(24,0)	(31,7)	128	-	
Central Multi-block Fourier Amplitude Vector $\boldsymbol{x}_2^g$	$\lvert G_1^0(u,v)\rvert$	(0,0)	(7,7)	(24,0)	(31,7)	128	1	384
	$\lvert G_k^1(u,v)\rvert$	(0,0)	(3,3)	(12,0)	(15,3)	32	4	
	$\lvert G_k^2(u,v)\rvert$	(0,0)	(1,1)	(6,0)	(7,1)	8	16	

STEP 2) Extraction of Central Multi-block Fourier Amplitude Vector

A Central Multi-block Fourier Amplitude Vector $\boldsymbol{x}_2^g$ is extracted from the Fourier amplitudes of (a) the central part $g_1^0(x,y)$, (b) quarter images $g_k^1(x,y)$ (k =1,2,3,4), and (c) 1/16 images $g_k^2(x,y)$ (k =1,2,3,…,16).

(a) central part

$$g_1^0(x,y) = g(x,y) \quad (x = 0,1,\cdots,31; y = 0,1,\cdots,31).$$

(b) quarter images

$$g_k^1(x,y) = g(x+16s_k^1, y+16t_k^1) \quad (x = 0,1,\cdots,15; y = 0,1,\cdots,15),$$

where $s_k^1 = (k-1)\%2$ and $t_k^1 = (k-1)/2$.

(c) one-sexteenth images

$$g_k^2(x,y) = g_1^0(x+8s_k^2, y+8t_k^2) \quad (x = 0,1,\cdots,7; y = 0,1,\cdots,7),$$

where $s_k^2 = (k-1)\%4$ and $t_k^2 = (k-1)/4$.

The Fourier amplitude $\lvert G_k^j(u,v)\rvert$ of each image is calculated as follows:

$$G_k^j(u,v) = \sum_{x=0}^{M^j-1}\sum_{y=0}^{N^j-1} g_k^j(x,y)\exp\left(-2\pi i\left(\frac{xu}{M^j}+\frac{yv}{N^j}\right)\right),$$

$$\lvert G_k^j(u,v)\rvert = \sqrt{\Re e\left[G_k^j(u,v)\right]^2 + \Im m\left[G_k^j(u,v)\right]^2}.$$

where M^0 =32, M^1 =16, M^2 =8, N^0 =32, N^1 =16, and N^2 =8. A Multi-block Central Fourier Amplitude Vector $\boldsymbol{x}_2^g$ is obtained by scanning each amplitude $\lvert G_k^j(u,v)\rvert$ as defined in Table Amd1-7.

STEP 3-5) are the same as those of FourierFeature, for example, the Joint Central Fourier Vector $\mathbf{y}_3^g$ consists of the normalized vectors $\mathbf{y}_1^g$ and $\mathbf{y}_2^g$. The basis matrices $\boldsymbol{\Psi}_1^g$, $\boldsymbol{\Psi}_2^g$, $\boldsymbol{\Psi}_3^g$ and the mean vectors $\boldsymbol{m}_1^g$, $\boldsymbol{m}_2^g$ for CentralFourierFeature are defined in Annex D.

The size of CentralFourierFeature is indicated by numOfCentralFourierFeature.

© ISO/IEC 2004 — All rights reserved

Documents
Document Sharing Hub
Full document details: ISO_IEC 15938-3_2002_Amd 1_2004

numOfCompositeFeature
This field specifies the number of components in CompositeFeature. The allowed range is from 0 to 63.

numOfSubregionCompositeFeature
This field specifies the number of components in CentralCompositeFeature. The allowed range is from 0 to 63.

CompositeFeature

This element represents a facial feature based on the cascaded LDA of Joint Fourier Vector $\mathbf{y}_3^f$ and Luminance Vector $\mathbf{y}^k$ of a normalized face image. Figure Amd1-3 illustrates its extraction process.

© ISO/IEC 2004 — All rights reserved

Documents
Document Sharing Hub
Full document details: ISO_IEC 15938-3_2002_Amd 1_2004

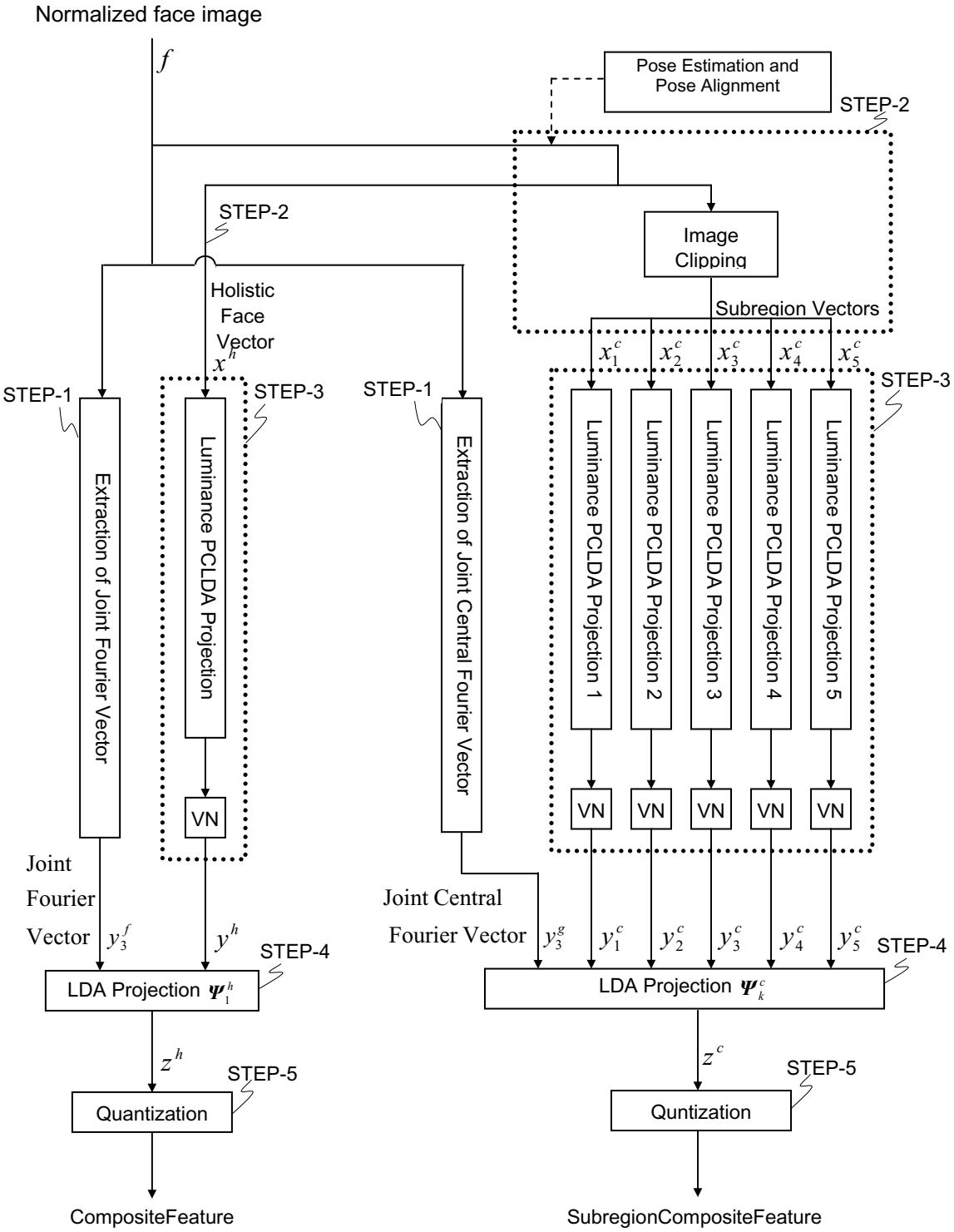

Figure Amd1-3 - Extraction of CompositeFeature and CentralCompositeFeature.

© ISO/IEC 2004 — All rights reserved

Documents
Document Sharing Hub
Full document details: ISO_IEC 15938-3_2002_Amd 1_2004

STEP 1) Extraction of Joint Fourier Vector

A 150-dimensional Joint Fourier Vector $\boldsymbol{y}_3^f$ is extracted from the normalized face image as defined in the Component semantics of FourierFeature

STEP 2) Extraction of Holistic Face Vector

A 2576-dimensional Holistic Face Vector $\boldsymbol{x}^h$ is extracted from the normalized face image using a row-wise raster-scan starting at the top-left corner and finishing at the bottom-right corner. Pose compensation process can be applied before or after the normalization process as optional. In case of pose compensated image, the eye positions are also restricted as defined in the normalized face image.

STEP 3) PCLDA projection and normalization of Holistic Face Vector

The Holistic Face Vector $\boldsymbol{x}^h$ is projected using a PCLDA basis matrix, and normalized to a 40-dimensional Luminance Vector $\boldsymbol{y}^h$ given by

$$\boldsymbol{y}^h = \frac{\boldsymbol{\Psi}_1^{h^T} \boldsymbol{x}^h - \boldsymbol{m}^h}{\left| \boldsymbol{\Psi}_1^{h^T} \boldsymbol{x}^h - \boldsymbol{m}^h \right|},$$

where the PCLDA basis matrix $\boldsymbol{\Psi}_1^h$ and the mean vector $\boldsymbol{m}^h$ are specified in Annex D.

STEP 4) LDA projection

The Joint Fourier Vector $\boldsymbol{y}_3^f$ and the Luminance Vector $\boldsymbol{y}^h$ are combined to form a 190-dimensional vector. The combined vector shall be projected using the LDA basis matrix $\boldsymbol{\Psi}_2^h$ specified in Annex D. The projected vector $\boldsymbol{z}^h$ is given by

$$\boldsymbol{z}^h = \boldsymbol{\Psi}_2^{h^T} \begin{pmatrix} \boldsymbol{y}_3^f \\ \boldsymbol{y}^h \end{pmatrix}.$$

STEP 5) Quantization

Each element of $\boldsymbol{z}^h$ is clipped in the range of 5-bit unsigned integer, and stored as CompositeFeature. The size of CompositeFeature is indicated by numOfCompositeFeature.

SubregionCompositeFeature

This element represents a facial feature based on the cascaded LDA of Joint Central Fourier Vector $\mathbf{y}_3^g$ and Subregion Vectors $\mathbf{y}_k^c (k = 1,2,\ldots 5)$ of a normalized face image as shown in Figure 6. The Subregions are designed to decompose the normalized face image into five parts as shown in Figure Amd1-4.

© ISO/IEC 2004 — All rights reserved

Documents
Document Sharing Hub
Full document details: ISO_IEC 15938-3_2002_Amd 1_2004

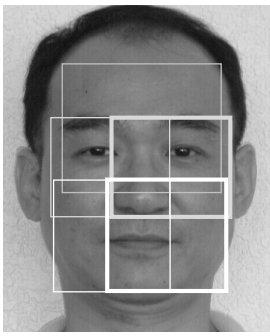

Figure Amd1-4 - The five subregions of a normalized face image

The extraction process is described below.

STEP 1) Extraction of Joint Central Fouirer Vector

A 150-dimensional Joint Central Fourier Vector $\boldsymbol{y}_3^g$ is extracted as defined in the Component semantics of CentralFourierFeature.

STEP 2) Extraction of Face Subregion Vectors

Five Face Subregion Vectors $x_k^c (k = 1,2,\cdots 5)$ are extracted from the normalized face image using the row-wise raster-scan defined in Table Amd1-8. A pose-compensated image can be used instead of the normalized face image as in CompositeFeature.

STEP 3) PCLDA projection of Face Subregion Vectors

Each vector $\boldsymbol{x}_k^c$ is projected using a PCLDA basis matrix, and normalized to a 40-dimensional Subregion Vector $\boldsymbol{y}_k^c$ given by

$$\boldsymbol{y}_k^c = \frac{\boldsymbol{\Psi}_k^{c^T} \boldsymbol{x}_k^c - \boldsymbol{m}_k^c}{\left| \boldsymbol{\Psi}_k^{c^T} \boldsymbol{x}_k^c - \boldsymbol{m}_k^c \right|},$$

where the PCLDA basis matrices $\boldsymbol{\Psi}_k^c$ (k =1,2,…,5) and the mean vectors $\boldsymbol{m}_k^c$ (k =1,2,…,5) are specified in Annex D.

STEP 4) LDA projection

The Joint Central Fourier Vector $\boldsymbol{y}_3^g$ and the Subregion Vectors $\boldsymbol{y}_k^c$ (k =1,2,…,5) are combined to form a 350-dimensional vector. The combined vector shall be projected using the LDA basis matrix $\boldsymbol{\Psi}_6^c$ specified in Annex D. The projected vector $\boldsymbol{z}^c$ is given by

$$\boldsymbol{z}^c = \boldsymbol{\Psi}_6^{c^T} \begin{pmatrix} \boldsymbol{y}_3^g \\ \boldsymbol{y}_1^c \\ \boldsymbol{y}_2^c \\ \boldsymbol{y}_3^c \\ \boldsymbol{y}_4^c \\ \boldsymbol{y}_5^c \end{pmatrix}.$$

STEP 5) Quantization

© ISO/IEC 2004 — All rights reserved

Documents
Document Sharing Hub
Full document details: ISO_IEC 15938-3_2002_Amd 1_2004

Each element of z^c is clipped in the range of 5-bits unsigned integer, and stored as SubregionCompositeFeature. The size of SubregionCompositeFeature is indicated by numOfSubregionCompositeFeature.

Table Amd1-8 - Scan regions for CompositeFeature and SubregionCompositeFeature.

Feature vector	Top-left		size		Vector Dimension
	x	y	Width	Height	
Holistic Face Vector $\boldsymbol{x}^h$	0	0	46	56	2576
Subregion Vector $\boldsymbol{x}_1^c$	9	4	29	27	783
Subregion Vector $\boldsymbol{x}_2^c$	6	16	24	21	504
Subregion Vector $\boldsymbol{x}_3^c$	17	16	24	21	504
Subregion Vector $\boldsymbol{x}_4^c$	7	25	24	24	576
Subregion Vector $\boldsymbol{x}_5^c$	16	25	24	24	576

Add a new subclause 12:

12 Visual Description Schemes

12.1 Media-centric description schemes

12.1.1 Introduction

This subclause specifies three visual description schemes designed to describe different types of visual contents. The StillRegionFeatureType contains several elementary descriptors to describe the signal-level characteristics of arbitrary shaped still regions. The VideoSegmentFeatureType and MovingRegionFeatureType are designed to describe those of moving pictures. The former supports ordinary video without shape and the latter does arbitrary shaped video sequences. Note that these visual description schemes include features associated with vsisual-signal characteristics (eg., color, texture, shape and motion) and that other features such as spatial or temporal localization shall be specified in the corresponding Segment DSs (defined in ISO/IEC 15938-5).

12.1.2 Media-centric DS Syntax

```
<!-- ######################################### -->
<!--  Definition of media-centric visual DSs  -->
<!-- ######################################### -->

<!-- ################################################### -->
<!--  Definition of MPEG-7 Still Region Feature Type   -->
<!-- ################################################### -->

<complexType name="StillRegionFeatureType">
  <complexContent>
    <extension base="mpeg7:VisualDSType">
      <sequence>
      <!-- List of features available -->
      <!-- Color Distribution -->
      <choice minOccurs="0">
        <!-- for the region with limited number of colors -->
```

© ISO/IEC 2004 — All rights reserved

Documents
Document Sharing Hub
Full document details: ISO_IEC 15938-3_2002_Amd 1_2004

```
          <element name="DominantColor" type="mpeg7:DominantColorType">
          <!-- for generic applications -->
          <element name="ScalableColor" type="mpeg7:ScalableColorType">
          <!-- for high-level applications requesting precise retrieval -->
          <element name="ColorStructure" type="mpeg7:ColorStructureType">
        </choice>
        <!-- Spatial Distribution of Color -->
        <element name="ColorLayout" type="mpeg7:ColorLayoutType" minOccurs="0">
        <!-- Color Temperature -->
        <element name="ColorTemperature" type="mpeg7:ColorTemperatureType"
                minOccurs="0">
        <!—Illumination Independent Color -->
        <element name="IlluminationCompensatedColor"
                  type="mpeg7:IlluminationInvariantColorType" minOccurs="0">
        <!-- Spatial Distribution of edges -->
        <element name="Edge" type="mpeg7:EdgeHistogramType" minOccurs="0">
        <!-- Homogeneous Patterns -->
        <!-- It is applicable only to the picture with homogeneous pattern -->
        <choice minOccurs="0">
          <element name="HomogeneousPattern" type="mpeg7:HomogenousTextureType">
          <!-- In case only rough browsing is requested -->
          <element name="TextureBrowsing" type="mpeg7:TextureBrowsingType">
        </choice>
        <!-- Shape -->
        <choice minOccurs="0">
          <!-- for shape mask-->
          <element name="ShapeMask" type="mpeg7:RegionShapeType">
          <!-- for contour -->
          <element name="Contour" type="mpeg7:ContourShapeType">
        </choice>
        </sequence>
      </extension>
    </complexContent>
  </complexType>

  <!-- ################################################## -->
  <!--  Definition of MPEG-7 VideoSegmentFeatureType   -->
  <!-- ################################################## -->

  <complexType name="VideoSegmentFeatureType">
    <complexContent>
      <extension base="mpeg7:VisualDSType">
        <sequence>
        <!-- List of features available -->
        <!-- Temporal transition of frame feature -->
        <element name="TemporalTransition" type="mpeg7:VisualTimeSeriesType"
                   minOccurs="0" maxOccurs="unbounded"/>
        <!-- Representative feature over all frame in the sequence -->
        <element name="RepresentativeFeature" type="mpeg7:GofGopFeature"
          minOccurs="0" maxOccurs="unbounded"/>
        <!-- motion activity -->
        <element name="MotionActivity" type="mpeg7:MotionActivityType"
                   minOccurs="0"/>
        </sequence>
      </extension>
    </complexContent>
  </complexType>

  <!-- ################################################## -->
  <!--  Definition of MPEG-7 MovingRegionFeatureType   -->
```


© ISO/IEC 2004 — All rights reserved
Documents
Document Sharing Hub
Full document details: ISO_IEC 15938-3_2002_Amd 1_2004

```
<!-- ################################################### -->

<complexType name="MovingRegionFeatureType">
  <complexContent>
    <extension base="mpeg7:VideoSegmentFeatureType">
      <sequence>
      <!-- List of features available -->
      <!-- description of statistical characteristics of shape changes -->
      <element name="ShapeVariation" type="mpeg7:ShapeVariationType"
                minOccurs="0"/>
      <!-- description of motion characteristics -->
      <choice minOccurs="0">
        <element name="ParametricMotion" type="mpeg7:ParametricMotionType">
        <element name="MotionTrajectory" type="mpeg7:MotionTrajectoryType">
      </choice>
      </sequence>
    </extension>
  </complexContent>
</complexType>
```

12.1.3 Semantics

Semantics of the `StillRegionFeatureType`:

Name	*Definition*
`StillRegionFeatureType`	Describes visual characteristics of an arbitrary-shaped still region. StillPicture`Type` extends Visual`DSType`.
`DominantColor`	Describes the color distribution of a still region. This element is useful for the pictures which have limited number of colors like an animation or a piece of natural pictures.
`ScalableColor`	Describes the color distribution of a still region. This element is useful for the applications which request the interoperability between the conventional systems which are not mpeg-7 conformant, but uses a histogram-based color-distribution description tool.
`ColorStructure`	Describes the color distribution of a still region. This tool is useful for the applications which expect high accuracy rather than low description storage cost as well as low complexity.
`ColorLayout`	Describes the spatial distribution of colors of a still region.
`ColorTemperature`	Describes the perceptual temperature feeling of illumination color in a still region.
`IlluminationCompensatedColor`	Describe the color distribution or spatial-distribution of color of a still region in where illumination condition is compensated for illumination independent color retrieval.
`Edge`	Describes the spatial distribution of edges of a still region.
`HomogeneousPattern`	Describes the homogeneous pattern of a still region.

© ISO/IEC 2004 — All rights reserved

Documents
Document Sharing Hub
Full document details: ISO_IEC 15938-3_2002_Amd 1_2004

Name	*Definition*
`TextureBrowsing`	Describes the homogeneous pattern of a still region using predefined terms.
`ShapeMask`	Describe the shape mask of an arbitrary shaped region. This element is useful in case the region is disconnected or has holes inside.
`Contour`	Describes the contour characteristic of an arbitrary shaped region. This element is useful to describe a contour instead of a mask pattern.

Semantics of the `VideoSegmentFeatureType`:

Name	*Definition*
`VideoSegmentFeatureType`	Describes visual characteristics of ordinary moving pictures. VideoSequence`Type` extends Visual`DSType`.
`TemporalTransition`	Describe temporal transition of an elementary feature.
`RepresentativeFeature`	Describe a representative value of an elementary feature.
`MotionActivity`	Describe motion variation over a segment.

Semantics of the `MovingRegionFeatureType`:

Name	*Definition*
`MovingRegionFeatureType`	Describes visual characteristics of arbitrary shaped video sequeces. VideoObject`Type` extends Visual`DSType`.
`ShapeVariation`	Describes shape variation over a video segment.
`ParametricMotion`	Describe model parameters representing the motion over the attached moving region.
`MotionTrajectory`	Describe the trajectory of the attached region.

© ISO/IEC 2004 — All rights reserved
Documents
Document Sharing Hub
Full document details: ISO_IEC 15938-3_2002_Amd 1_2004

Add new Annex after Annex C:

Annex D
(normative)

Model parameters for Advanced Face Recognition

Tables D-1, D-2, D-3 and D-4 summarize the model parameters used by the Advanced Face Recognition descriptor described in Section 11.2. All the parameter values are defined bellow the Tables; using C language like syntax. For example, if a model parameter $\boldsymbol{\Psi}$ is described in this annex as follows:

$$\boldsymbol{\Psi}[2][3]=\{\{1,2,3\},\{4,5,6\}\};$$

it means that:

$$\boldsymbol{\Psi} = \begin{pmatrix} 1 & 4 \\ 2 & 5 \\ 3 & 6 \end{pmatrix}$$

Table D-1 - Model parameters for FourierFeature element used in Advanced Face Recognition

model parameter	meaning of model parameter
PCLDA basis matrix $\boldsymbol{\Psi}_1^f$	70x644 basis matrix obtained by PCLDA of Fourier Spectrum Vector $\boldsymbol{x}_1^f$
mean vector $\boldsymbol{m}_1^f$	70-dimensional mean vector of projected vector $\boldsymbol{\Psi}_1^{fT}\boldsymbol{x}_1^f$
PCLDA basis matrix $\boldsymbol{\Psi}_2^f$	80x856 basis matrix obtained by PCLDA of Multi-block Fourier Amplitude Vector $\boldsymbol{x}_2^f$
mean vector $\boldsymbol{m}_2^f$	80-dimensional mean vector of projected vector $\boldsymbol{\Psi}_2^{fT}\boldsymbol{x}_2^f$
LDA basis matrix $\boldsymbol{\Psi}_3^f$	63x150 basis matrix obtained by LDA of Joint Fourier Vector $\boldsymbol{y}_3^f$

Table D-2 - Model parameters for CentralFourierFeature used in Advanced Face Recognition

model parameter	meaning of model parameter
PCLDA basis matrix $\boldsymbol{\Psi}_1^g$	70x256 basis matrix obtained by PCLDA of Central Fourier Spectrum Vector $\boldsymbol{x}_1^g$
mean vector $\boldsymbol{m}_1^g$	70-dimensional mean vector of projected vector $\boldsymbol{\Psi}_1^{gT}\boldsymbol{x}_1^g$
PCLDA basis matrix $\boldsymbol{\Psi}_2^g$	80x384 basis matrix obtained by PCLDA of Central Multi-block Fourier Amplitude Vector $\boldsymbol{x}_2^g$
mean vector $\boldsymbol{m}_2^g$	80-dimensional mean vector of projected vector $\boldsymbol{\Psi}_2^{gT}\boldsymbol{x}_2^g$
LDA basis matrix $\boldsymbol{\Psi}_3^g$	63x150 basis matrix obtained by LDA of Joint Central Fourier Vector $\boldsymbol{y}_3^g$

Table D-3 - Model parameters for CompositeFeature used in Advanced Face Recognition

model parameter	meaning of model parameter
PCLDA basis matrix $\boldsymbol{\Psi}_1^h$	40x2576 basis matrix obtained by PCLDA of Holistic Face Vector $\boldsymbol{x}^h$
mean vector $\boldsymbol{m}^h$	40-dimensional mean vector of projected vector $\boldsymbol{\Psi}_1^{hT}\boldsymbol{x}^h$
LDA basis matrix $\boldsymbol{\Psi}_2^h$	63x190 basis matrix obtained by LDA of combined vector of $\boldsymbol{y}_3^f$ and $\boldsymbol{y}^h$

Table D-4 - Model parameters for SubregionCompositeFeature used in Advanced Face Recognition

model parameter	meaning of model parameter
PCLDA basis matrix $\boldsymbol{\Psi}_1^c$	40x783 basis matrix obtained by PCLDA of Face Subregion Vector $\boldsymbol{x}_1^c$
PCLDA basis matrix $\boldsymbol{\Psi}_2^c$	40x504 basis matrix obtained by PCLDA of Face Subregion Vector $\boldsymbol{x}_2^c$
PCLDA basis matrix $\boldsymbol{\Psi}_3^c$	40x504 basis matrix obtained by PCLDA of Face Subregion Vector $\boldsymbol{x}_3^c$
PCLDA basis matrix $\boldsymbol{\Psi}_4^c$	40x576 basis matrix obtained by PCLDA of Face Subregion Vector $\boldsymbol{x}_4^c$
PCLDA basis matrix $\boldsymbol{\Psi}_5^c$	40x576 basis matrix obtained by PCLDA of Face Subregion Vector $\boldsymbol{x}_5^c$
mean vector $\boldsymbol{m}_1^c$	40-dimensional mean vector of projected vector $\boldsymbol{\Psi}_1^{cT}\boldsymbol{x}_1^c$
mean vector $\boldsymbol{m}_2^c$	40-dimensional mean vector of projected vector $\boldsymbol{\Psi}_2^{cT}\boldsymbol{x}_2^c$
mean vector $\boldsymbol{m}_3^c$	40-dimensional mean vector of projected vector $\boldsymbol{\Psi}_3^{cT}\boldsymbol{x}_3^c$
mean vector $\boldsymbol{m}_4^c$	40-dimensional mean vector of projected vector $\boldsymbol{\Psi}_4^{cT}\boldsymbol{x}_4^c$
mean vector $\boldsymbol{m}_5^c$	40-dimensional mean vector of projected vector $\boldsymbol{\Psi}_5^{cT}\boldsymbol{x}_5^c$
LDA basis matrix $\boldsymbol{\Psi}_6^c$	63x350 basis matrix obtained by LDA of combined vector of $\boldsymbol{y}_3^g, \boldsymbol{y}_1^c, \boldsymbol{y}_2^c, \boldsymbol{y}_3^c, \boldsymbol{y}_4^c, \boldsymbol{y}_5^c$

© ISO/IEC 2004 — All rights reserved

Documents
Document Sharing Hub

Full document details: ISO_IEC 15938-3_2002_Amd 1_2004

PCLDA basis matrix Ψ_1^{f} [70][644]={

{2.928142e-002, 1.719657e-001, -4.431209e-002, 1.431678e-002, 9.404494e-002, -2.425928e-002, 4.765720e-002, 1.479648e-002, 2.928023e-004, 5.470493e-002, -3.046105e-002, 3.502573e-002, 3.502573e-002, -3.046105e-002, 5.470493e-002, 2.928023e-004, 1.479648e-002, 4.765720e-002, -2.425928e-002, 9.404494e-002, 1.431678e-002, -4.431209e-002, 1.719657e-001, 4.842488e-002, -1.008709e-001, 2.226921e-001, -6.170412e-002, 8.626641e-002, -2.506170e-002, 2.019665e-002, -2.703654e-003, 3.422383e-002, -5.832668e-002, 3.697568e-002, 4.341332e-004, 2.983990e-002, 5.227782e-002, -1.534924e-002, 4.036130e-002, 3.783265e-002, 3.399130e-002, -3.111502e-002, 3.267962e-002, 4.210681e-002, 1.196126e-001, -5.267082e-002, 2.398889e-002, 8.602008e-002, -6.629223e-002, 2.209730e-002, 2.229748e-002, 2.584037e-002, 6.588156e-004, 1.132942e-002, 2.245798e-002, 6.417187e-002, -3.879746e-002, -5.227759e-003, 2.769614e-003, 8.290947e-003, 4.675062e-002, 1.412390e-002, -1.534332e-002, -7.683035e-003, 1.020499e-001, -3.925166e-002, 4.785850e-002, -1.094535e-001, 8.274209e-002, 4.504214e-002, -1.817646e-002, 1.166661e-001, 6.097985e-002, -4.827652e-002, 8.919261e-002, 4.427936e-002, -1.105109e-002, 5.285195e-002, 2.421766e-003, 4.707541e-002, 2.924441e-002, 1.895663e-002, 1.356471e-004, -1.790212e-003, 7.941514e-003, -7.192989e-003, 6.274009e-003, 2.283336e-003, 6.729050e-003, -5.127053e-002, 1.051507e-001, 4.503916e-002, -5.841115e-002, 2.603932e-002, -4.670765e-002, 3.396085e-002, 3.983563e-002, 4.443092e-002, -2.484549e-002, 4.711532e-002, 1.508593e-002, 4.201075e-002, -2.066626e-003, -3.866731e-002, -5.988993e-003, 4.027007e-002, -1.523774e-003, 1.595520e-002, 7.042017e-002, -2.634239e-002, 2.532085e-002, 5.677276e-002, 6.509260e-002, -1.082861e-002, 3.327327e-002, 4.220668e-002, -1.561912e-002, 8.038052e-002, 2.340617e-002, 3.666640e-002, 7.200849e-003, 6.870737e-002, -1.777832e-003, 1.553079e-002, -8.208426e-003, -2.321398e-002, 2.445433e-003, -2.726799e-002, -2.791122e-002, 2.417603e-002, -8.741110e-003, -1.845534e-002, 1.189513e-001, -4.590476e-003, -2.052539e-003, 3.205180e-002, 1.459760e-001, 3.547427e-002, 2.680840e-002, 3.992865e-002, 6.269639e-002, 3.696668e-002, -3.244331e-002, 8.547534e-002, -4.207478e-002, 1.351396e-002, -3.398529e-003, -8.046674e-003, 5.811366e-003, -1.666645e-002, -2.323962e-002, -7.236192e-003, -8.148130e-003, 1.538433e-002, 1.010369e-002, -5.468572e-002, 3.142811e-002, 2.330009e-002, -2.080412e-002, 1.387783e-001, 1.948067e-002, 8.921116e-002, 3.262514e-002, -8.258636e-002, 6.005106e-002, -3.548484e-003, 3.616212e-003, 5.876242e-002, -1.808209e-002, 2.138555e-002, 2.983253e-002, -1.319066e-002, -1.501944e-002, -1.019477e-002, -4.018774e-002, 2.029407e-003, 2.284629e-002, -9.027509e-003, 4.400758e-002, -3.056263e-002, -3.432101e-002, 9.717422e-002, -5.985118e-002, 1.476761e-002, -6.119363e-002, 5.131605e-002, 2.446677e-002, -2.650960e-002, 2.546457e-002, 8.759276e-003, -4.797285e-002, 4.538432e-002, 9.605836e-003, -1.668006e-002, -1.772051e-002, -2.736696e-002, 6.851678e-003, -2.046165e-003, -3.857791e-002, -2.928202e-002, 4.805542e-002, -3.133418e-003, -2.538183e-002, 2.172448e-002, 1.546931e-002, 4.598113e-002, 2.283818e-002, 8.661684e-003, 3.383235e-002, 5.905397e-002, 8.643810e-003, -3.547162e-002, -3.258100e-003, 1.532459e-002, -1.864142e-002, 1.722424e-002, -1.171515e-002, -2.970899e-002, -1.616431e-002, 1.123617e-002, 6.772148e-003, -2.117760e-002, -1.045900e-002, -1.498204e-002, 8.908662e-003, 1.268856e-002, -2.904782e-002, -2.978640e-002, 4.916459e-002, 4.690168e-002, 5.619050e-002, 8.020360e-003, 3.720805e-002, -3.016525e-003, 1.190253e-002, 3.819415e-003, -2.319658e-002, -6.856196e-003, 1.289163e-002, -2.501261e-002, -2.776890e-002, -4.972681e-003, 5.119079e-003, -7.981111e-003, 5.809963e-003, -1.018658e-002, 5.371414e-003, -2.592355e-003, -1.994785e-002, -7.397682e-003, 2.177879e-002, 2.924424e-003, 4.221390e-002, -6.441957e-003, 1.726997e-002, 1.456628e-002, 4.901712e-003, 3.528113e-002, 1.926344e-002, -1.808985e-002, 1.021286e-002, -1.109246e-002, -2.335846e-002, -4.067626e-003, 4.029135e-003, 1.284967e-003, 1.838665e-002, -6.860565e-003, 2.114314e-003, 8.503163e-003, -2.350975e-002, -7.794201e-003, 1.536111e-002, 1.420203e-002, 2.314845e-002, 6.244320e-003, 1.096820e-002, -1.439276e-003, 2.584791e-002, -5.489382e-003, 1.495002e-002, 1.592999e-002, 8.121851e-003, -9.563546e-003, -5.739768e-003, -1.278827e-002, -5.588983e-003, 1.308182e-003, 5.196910e-003, -4.139638e-004, 1.748569e-002, 2.708094e-004, -1.619654e-002, 1.451333e-002, -3.727321e-003, 1.941171e-004, -1.988147e-003, 3.000748e-002, 1.668786e-002, -9.269694e-003, 1.897441e-002, 1.736901e-002, -2.332687e-002, 2.721933e-002, 1.857813e-002, -1.777435e-002, 1.643169e-002, -1.598888e-003, -1.738384e-002, 1.190701e-003, 5.286855e-003, 3.487196e-004, 6.666230e-003, 4.687781e-003, 6.076918e-004, 2.243805e-002, -1.839224e-002, 9.342994e-003, 8.630246e-003, -3.952570e-003, 1.644494e-002, 1.690965e-002, 1.267699e-017, -6.815579e-003, 2.644735e-002, -2.551720e-002, 3.852634e-002, 5.649824e-003, -3.216271e-003, -1.603590e-002, 4.285660e-002, 8.981522e-003, 1.551337e-002, 3.655094e-002, -3.655094e-002, -1.551337e-002, -8.981522e-003, -4.285660e-002, 1.603590e-002, 3.216271e-003, -5.649824e-003, -3.852634e-002, 2.551720e-002, -2.644735e-002, 6.815579e-003, -9.225577e-002, 1.036860e-001, -1.630799e-002, 6.683128e-002, 2.373192e-002, 8.029718e-002, 7.197275e-003, 2.918706e-002, 7.218083e-003, -2.660391e-002, 5.917282e-003, -3.408560e-002, -5.899893e-002, -4.715534e-002, -2.850076e-002, 4.701692e-002, 4.193763e-002, -2.011415e-002, 2.894306e-002, 3.777705e-003, 3.282757e-002, -4.831474e-002, 1.210848e-001, -

© ISO/IEC 2004 – All rights reserved

Documents
Document Sharing Hub

Full document details: ISO_IEC 15938-3_2002_Amd 1_2004

1.377055e-001, -5.792044e-002, 5.325722e-002, -4.948085e-002, -7.446835e-002, 4.785602e-002, -1.825273e-002, -3.383690e-003, -6.336581e-004, 5.915947e-002, -2.278132e-002, 2.651507e-002, 1.450842e-002, -4.156814e-002, 4.173056e-002, 5.903495e-003, -3.045556e-002, -9.873950e-003, -1.112008e-002, -3.745951e-002, -9.065576e-002, 1.044670e-001, -2.634437e-002, 1.178992e-001, -5.560025e-002, -1.099136e-001, 7.960356e-002, -3.913083e-002, 4.061430e-002, -9.016647e-002, 9.486736e-003, 3.242317e-002, -7.412747e-002, 9.122073e-003, -8.676661e-003, 2.164974e-002, 2.342047e-002, -8.956029e-002, 1.559508e-002, 5.469436e-003, -1.256066e-001, -2.371166e-002, -1.360972e-002, -4.988991e-003, -2.063319e-002, -9.891970e-002, -8.577971e-002, 9.749025e-002, -2.539530e-002, 1.123935e-002, 4.578883e-002, -3.736719e-002, 9.828974e-002, 7.304753e-003, -3.283976e-002, 7.151275e-002, -2.242837e-002, 8.444321e-005, 2.232252e-002, -5.363266e-003, 6.871066e-003, -6.758540e-002, -1.814016e-002, 5.975538e-002, -4.870198e-002, 4.117262e-002, 4.026363e-002, -3.116752e-002, 8.019010e-002, 1.869799e-002, -3.463284e-002, 4.875188e-002, -3.776397e-002, -4.965823e-002, 4.641636e-002, -7.452860e-002, -1.535235e-003, 1.122951e-002, -5.423695e-002, -1.134586e-002, -5.709689e-002, -4.348204e-002, 9.614492e-003, -2.340142e-002, -1.089901e-002, 3.290045e-003, -6.264088e-002, 3.429398e-002, -4.663417e-002, -2.412714e-002, 3.522797e-002, -9.733648e-002, 2.427057e-002, 3.124237e-002, -2.350285e-002, -5.753743e-002, 5.843489e-002, -3.188425e-002, 1.751512e-002, -3.313050e-002, -1.730371e-002, -1.280812e-002, -6.491695e-002, -1.631806e-002, -6.176201e-004, -3.753628e-002, -1.193893e-002, -4.991019e-002, -4.135850e-002, 8.685620e-003, -3.023587e-002, 6.300155e-002, -3.817855e-003, -7.969032e-002, -3.630739e-002, 2.438657e-002, 1.697686e-002, 5.624706e-004, 3.864146e-003, -6.112880e-003, -1.932450e-003, -2.073453e-002, -1.448116e-003, -1.462729e-002, -5.909637e-002, -2.365651e-002, -1.238565e-003, 1.200054e-002, 1.877144e-003, 2.200273e-003, -5.463106e-003, -5.426353e-002, -5.709379e-003, -3.089491e-002, -5.402753e-002, 5.217873e-002, 1.361624e-002, -1.311584e-005, -5.162799e-002, -4.468758e-002, 1.408601e-002, -4.005611e-002, -1.272323e-002, 1.899633e-002, -3.402836e-003, 3.500757e-003, -2.417994e-002, -1.053848e-002, 5.781910e-003, 1.787546e-002, 1.130225e-002, 1.272319e-002, 1.034391e-002, 4.466087e-003, -5.349199e-003, -3.027226e-002, 5.020536e-003, -2.663148e-002, -4.592810e-002, 4.944268e-002, -5.135575e-002, 1.814029e-002, -3.469256e-002, 2.666215e-002, -5.673812e-002, 2.863562e-003, -1.985748e-002, 6.705326e-003, -1.646400e-002, -1.114912e-002, -6.906089e-003, 4.760390e-003, 3.751592e-003, 7.957988e-003, 1.224197e-002, 1.609386e-002, 2.625428e-004, -2.114638e-002, 1.065042e-002, -2.094706e-002, -1.386527e-002, -2.862858e-002, -1.913870e-002, -2.265236e-002, 3.050753e-002, -7.700262e-003, 1.331161e-002, -4.310730e-002, -6.957547e-003, -1.833992e-002, -4.812091e-002, 2.429754e-002, 2.370666e-003, -1.571802e-002, 9.438792e-003, 5.456266e-003, 4.160758e-004, 1.342100e-002, -1.098708e-002, 6.463484e-003, 2.862323e-002, -1.596825e-002, -2.922476e-002, -1.827541e-002, -5.290378e-003, -9.796140e-003, -4.884255e-002, 9.385489e-003, -5.426462e-003, -8.496038e-003, 2.263530e-002, -2.300182e-002, -3.359065e-002, 1.165231e-002, -2.424937e-002, -8.558967e-003, 1.025743e-002, 6.417671e-004, 7.733810e-003, -1.586514e-003, -6.695982e-003, 1.249955e-002, 7.488279e-004, -2.668262e-003, 1.606921e-002, -1.976984e-002, -4.535107e-002, -4.797351e-003, 7.284657e-003, -1.380080e-002, -1.350901e-002, 1.952836e-002, 7.664908e-003, -2.228245e-002, 2.012225e-002, -1.136928e-002, -2.851439e-002, -2.536665e-003, -9.340015e-003, -6.135796e-003, 6.447102e-003, 8.303082e-003, -8.927898e-003, 3.926125e-003, 2.711561e-003, 3.187306e-003, 3.671245e-003, 7.554640e-003, -1.922989e-002, 8.232853e-004, -1.033098e-002, -4.987093e-003, 9.748818e-004, 3.141614e-002, -6.194808e-003, -2.322626e-002, 1.077620e-002, 7.508646e-003, -8.175928e-003, -8.563582e-003, 2.634149e-003, -1.336602e-002, 9.916510e-004, 1.901532e-003, -3.280710e-003, -4.699687e-003, -2.246669e-003, 7.433593e-004, 6.035441e-003, 5.487317e-003, -7.703005e-004, -1.129779e-002, -1.902235e-002, 1.397909e-002, -9.808698e-003, -4.655858e-002},
{2.609012e-002, -3.400346e-002, -4.636973e-002, 8.649676e-003, 1.291042e-002, -5.190591e-002, -2.221065e-002, 5.880639e-002, -5.029656e-002, -1.129796e-003, -1.341616e-002, -1.825489e-002, -1.825489e-002, -1.341616e-002, -1.129796e-003, -5.029656e-002, 5.880639e-002, -2.221065e-002, -5.190591e-002, 1.291042e-002, 8.649676e-003, -4.636973e-002, -3.400346e-002, 1.031982e-001, -6.645174e-002, -7.192515e-003, 3.200457e-002, 2.719218e-002, -1.617471e-002, 2.256992e-002, -3.904313e-003, 2.736825e-002, -2.789549e-003, -2.940253e-002, 2.601179e-002, -4.753599e-002, -1.330588e-002, -4.571227e-003, 6.587701e-002, -4.138727e-002, 1.903302e-002, 6.617125e-002, -7.941725e-002, 3.196617e-002, -3.652845e-002, -3.054720e-002, -2.743135e-001, 6.667821e-002, 9.668086e-002, -1.754049e-001, 1.342121e-001, -3.220909e-002, -1.317327e-002, -1.789822e-002, -7.062092e-004, -3.872714e-002, 3.040198e-002, 6.275693e-004, 2.914538e-002, -1.883505e-002, 1.012218e-002, -4.363617e-003, 4.218000e-002, -9.960298e-003, -2.841923e-002, -2.614179e-002, 1.633081e-002, 6.861537e-002, 4.409723e-002, 5.440564e-002, 1.611411e-003, -1.215511e-001, 1.059194e-001, -7.180855e-002, -1.053644e-003, -4.428414e-002, -1.379327e-002, -3.666854e-002, 9.230615e-003, -4.288796e-002, 1.452025e-002, 9.938245e-003, 2.023558e-002, -3.537888e-002, 1.151773e-002, -5.637657e-002, -2.352593e-002, 3.957386e-002, -7.555570e-002, 1.484879e-001, -1.547225e-001, 2.746142e-002, -2.219653e-003, -1.200090e-001, 6.825818e-002, 1.021792e-002, -3.033795e-004, -1.794212e-002, 2.813774e-002, -1.757361e-002, 4.687322e-002, -4.243013e-003, -2.327763e-003, -2.116016e-002,

© ISO/IEC 2004 — All rights reserved

Documents
Document Sharing Hub
Full document details: ISO_IEC 15938-3_2002_Amd 1_2004

5.545127e-003, -2.508917e-002, 1.219195e-002, -3.360897e-002, 3.037759e-003, 6.254855e-003, -3.709841e-002, 1.268553e-001, -1.213637e-001, 4.832694e-002, -4.552643e-002, -9.525580e-003, -1.417307e-002, -5.209847e-002, 6.287693e-003, -4.295810e-002, 1.661446e-003, -3.862984e-002, 3.878859e-002, -2.100849e-002, -1.955081e-002, -1.693939e-002, 1.786036e-002, 7.052459e-003, 2.763150e-002, -3.875323e-002, 1.811073e-002, 3.124676e-002, -1.679836e-003, 1.730000e-002, -1.350043e-001, 1.994600e-002, -5.161206e-002, 6.494761e-003, 6.868034e-002, -2.185938e-002, 2.546499e-003, -4.706297e-002, 4.498404e-002, 1.884382e-003, -3.352049e-002, -5.659010e-002, 4.361101e-004, 9.567302e-003, 1.929949e-002, 2.868982e-003, 1.505874e-002, 4.016198e-002, 5.845135e-002, -1.795826e-002, -6.265418e-002, -1.936496e-002, 4.481764e-002, 4.975592e-002, -7.741862e-002, -1.188888e-002, -1.651537e-002, -3.564749e-002, 1.215735e-002, -1.192477e-001, 3.926975e-002, 3.955861e-002, -7.148233e-002, -1.907350e-002, 5.361402e-002, 2.254171e-002, -1.478759e-002, 9.398222e-003, 1.352957e-002, -7.324629e-003, -1.202864e-003, -2.931086e-003, -1.574907e-003, -7.341386e-003, 1.799658e-002, -5.883186e-002, 1.851327e-002, 5.406238e-002, -8.998542e-002, -6.414133e-003, -3.716436e-002, -7.501980e-003, 1.735201e-002, -4.521944e-003, -4.568373e-002, 3.723633e-003, 1.904571e-002, -4.034496e-003, -3.317965e-002, -1.137339e-002, 2.407289e-002, 1.853065e-002, -1.581862e-002, 2.269620e-002, 1.350141e-002, -1.327251e-002, 2.616930e-002, -3.106247e-002, 6.013802e-002, -6.534649e-002, -2.633633e-002, 2.558771e-002, -2.978157e-002, 1.343216e-002, -2.732239e-002, -1.033161e-002, -7.729785e-003, 1.497074e-002, 7.601716e-003, 1.532800e-002, -3.312666e-002, -1.890068e-002, 3.504828e-002, 1.383802e-002, -4.090854e-003, -4.413351e-003, -2.152218e-002, -3.251190e-003, 1.144831e-002, -5.478631e-002, 1.147230e-002, 2.416438e-002, -4.836659e-003, 4.768204e-002, -4.643431e-002, -1.524202e-003, -2.351314e-002, 2.182196e-002, -1.439098e-002, -2.611845e-002, 3.714256e-002, 2.847094e-003, -2.225043e-002, 1.554773e-002, 1.713973e-002, -8.089263e-003, 5.079544e-004, -6.010161e-003, 1.471794e-002, 4.099575e-004, -2.599171e-002, -9.171364e-003, 2.757992e-002, -2.470806e-002, -3.543643e-002, 5.402992e-002, -1.292353e-002, 1.821024e-004, -3.512615e-002, -1.703471e-002, 3.090088e-004, -1.570040e-002, 2.847552e-002, -2.828805e-002, -7.135899e-003, 2.600467e-002, 9.697538e-003, -9.390221e-003, 5.059550e-003, -6.900437e-003, 4.538847e-003, -7.396316e-003, 4.722397e-003, 9.498096e-003, -7.411272e-003, -6.725100e-003, 1.378718e-002, 1.517912e-002, -2.947127e-002, 5.985309e-003, 1.330339e-002, -1.280263e-002, -1.051999e-002, -4.969217e-003, 7.215630e-003, -3.823290e-002, 5.182645e-003, -4.017181e-003, -9.370002e-004, 6.287717e-003, -1.617456e-003, -9.628045e-003, -4.226707e-003, -7.745409e-005, -1.297127e-003, -3.860581e-003, -1.521703e-002, 1.484144e-002, 1.108175e-002, -1.952925e-002, 3.061151e-003, 2.534043e-002, -2.946991e-003, -1.656131e-002, -4.355340e-003, -1.530467e-002, 2.170698e-002, -2.238116e-002, -1.674629e-003, 8.600232e-004, -2.148923e-002, 3.595482e-003, 1.074210e-002, -5.570500e-003, -5.846788e-003, 1.569113e-004, 8.315252e-003, 5.608677e-003, -1.186611e-002, -1.904413e-003, 9.876335e-004, 1.904761e-002, 2.319659e-003, -3.431697e-002, 5.306295e-003, 1.719847e-002, -1.802802e-002, -6.730919e-003, -3.027569e-017, -5.219546e-003, 8.126209e-003, -2.131815e-002, 1.772904e-002, -9.845230e-003, -1.075815e-002, 1.342016e-002, -7.873224e-003, -1.217985e-002, 1.237900e-002, -3.879746e-002, 3.879746e-002, -1.237900e-002, 1.217985e-002, 7.873224e-003, -1.342016e-002, 1.075815e-002, 9.845230e-003, -1.772904e-002, 2.131815e-002, -8.126209e-003, 5.219546e-003, -2.490408e-001, 6.371772e-002, 6.113634e-002, -8.416228e-002, -1.785281e-002, -3.572265e-002, 2.174548e-002, -3.940369e-002, -4.544323e-002, 6.865405e-003, -3.405772e-002, -1.798920e-002, 3.266857e-002, 4.916491e-002, 2.204726e-002, -3.656958e-002, -4.540258e-002, 2.337377e-002, 1.359872e-002, -7.442230e-002, -2.389874e-002, 5.493176e-003, 1.167588e-001, 2.206967e-003, -2.487952e-003, -4.448351e-002, 4.132105e-002, 8.786276e-004, 3.689602e-002, -2.734480e-002, 2.397189e-002, -4.228820e-003, -2.717990e-002, -1.702633e-003, -2.607452e-002, 5.572590e-004, 7.405988e-003, 1.763538e-004, 2.240716e-002, 7.171874e-002, -7.407629e-002, 1.556280e-002, 8.245596e-003, 5.361073e-002, -5.926724e-002, -3.084605e-002, -9.324517e-002, 6.229717e-002, -8.945789e-002, 7.488433e-002, -4.497961e-002, 4.139814e-002, 5.053152e-002, -5.649677e-002, -1.821903e-003, -4.798981e-003, -5.828058e-002, 1.972349e-003, 1.925814e-002, 1.835124e-002, 1.585391e-002, -2.810167e-002, -9.350637e-002, 3.861362e-002, 3.146980e-002, 3.625339e-002, -4.778096e-002, -4.096912e-002, 8.384900e-002, 5.675457e-002, -2.962950e-002, -1.737467e-003, 6.209548e-002, -5.997189e-003, 8.361954e-003, -4.447547e-002, 2.962110e-002, -3.026552e-002, -6.217729e-002, -1.114100e-002, 2.347958e-002, -1.992497e-002, -1.401697e-002, 5.284468e-002, -3.849674e-003, 2.082467e-002, 3.359796e-002, -4.796201e-002, -3.194028e-003, 8.317141e-003, 4.255000e-002, -2.428172e-002, -4.282195e-002, 2.598506e-002, 8.930848e-002, -7.736930e-002, -3.750922e-002, 6.651301e-002, -1.836952e-002, -1.362180e-002, 5.429079e-003, -1.241842e-002, 2.464593e-002, 3.389235e-002, -1.569635e-002, -1.016016e-002, 3.823973e-003, 8.171837e-002, -4.794622e-003, -8.311831e-002, 9.231190e-002, -1.328919e-001, -4.912869e-002, 5.247937e-002, -3.659903e-002, -1.615645e-002, 5.955229e-002, -2.753069e-002, -1.555446e-002, 1.036139e-001, -6.913117e-002, 2.477135e-003, 1.381715e-002, -5.457798e-003, 2.637659e-002, 1.646472e-002, -6.843515e-003, -6.042768e-005, -4.045487e-002, 1.267621e-002, 2.997162e-002, 8.615888e-003, 4.390437e-002, -4.558310e-002, 1.074897e-001, 4.514965e-002, -4.439050e-002, 8.777358e-002, -4.968071e-002, 7.209807e-003, 1.952898e-002, 4.916371e-002, -2.593318e-002, -

© ISO/IEC 2004 – All rights reserved
Documents
Document Sharing Hub
Full document details: ISO_IEC 15938-3_2002_Amd 1_2004

3.257732e-002, 1.320433e-002, 3.102045e-002, 6.390975e-003, 4.956603e-004, 2.577630e-002, 2.485193e-002, 6.464236e-003, 2.857153e-002, -3.648557e-002, -1.725966e-003, 3.357825e-002, -2.916357e-002, 6.300038e-002, -3.445584e-002, 1.910267e-002, 2.432706e-002, -1.992368e-002, -1.396636e-002, -1.129348e-002, 4.266869e-002, -5.104131e-003, -4.120375e-002, 5.570009e-002, 1.431299e-002, -3.953564e-002, -7.633102e-004, 3.899429e-002, 2.059113e-002, -2.681337e-003, -1.002444e-002, -1.813061e-002, 6.452605e-002, 7.472549e-003, -6.182904e-002, 1.696266e-002, 3.386623e-002, -2.747880e-002, -2.911501e-002, -2.739741e-002, 4.394785e-002, 2.829354e-002, -2.931991e-003, -9.088025e-003, -1.932570e-003, 2.537754e-002, -2.282086e-002, -3.864231e-002, 1.416277e-002, 2.378756e-002, 5.640192e-003, -8.864870e-003, -2.747059e-003, -5.145814e-004, 1.067231e-002, -2.885120e-002, 1.463676e-002, 3.725614e-002, -5.967728e-002, -1.467923e-002, 2.526829e-002, -7.453437e-003, 3.470368e-003, -2.388420e-002, -6.514743e-002, 2.939453e-002, 3.017456e-002, -2.971944e-004, 5.173214e-003, 4.531945e-003, 1.062255e-003, 8.150402e-003, -1.386642e-002, 9.106732e-005, 4.393446e-003, 4.704562e-003, 3.092589e-003, 3.274329e-003, 2.505189e-003, -7.074347e-003, -9.038939e-003, -3.042685e-003, 1.774403e-002, -3.984520e-002, -1.446189e-002, 2.724328e-002, 1.743638e-002, 1.365871e-002, -3.301547e-002, 1.456613e-002, 2.466964e-003, -9.133843e-003, 1.326609e-002, 1.482756e-002, -8.970157e-003, -6.277046e-003, -7.684994e-004, 7.396316e-003, 4.469844e-003, -6.037405e-003, -8.649701e-003, 4.726857e-003, -7.045907e-003, -3.598773e-002, 1.481163e-002, 1.022669e-002, 3.715312e-003, 1.327146e-003, -1.091133e-002, 1.489280e-003, -3.656753e-002, 4.376339e-002, -2.941054e-002, -1.051216e-002, 2.815436e-002, 1.559640e-002, -1.161540e-002, 8.398105e-003, -2.168610e-003, 5.442156e-003, 7.619545e-003, 7.648030e-003, 8.543875e-003, 1.220465e-002, -8.446644e-003, -8.627661e-003, 2.839136e-002, -3.139332e-002, -9.237592e-003, 2.848873e-002, -7.374983e-003, -3.504928e-004, -6.380931e-003, 2.509438e-002, -3.071986e-002, -5.540358e-003, 1.527540e-002, -6.012222e-003, -1.351094e-002, 2.872701e-002, -4.978090e-003, -1.596707e-002, 8.799972e-003, 1.211557e-002, 8.514311e-003, 1.263320e-004, -2.988661e-003, 2.853864e-003, -5.499403e-003, -1.271427e-002, 1.368775e-002, 1.295867e-002, -3.138146e-002, 6.812305e-003, 2.035560e-002, -2.608804e-002},
{8.764901e-002, -3.719054e-002, 5.693143e-002, -8.800662e-003, 1.537052e-002, -2.853375e-002, 7.303968e-002, -6.085449e-002, 7.140970e-002, -9.500253e-003, 6.290275e-003, 3.205225e-003, 3.205225e-003, 6.290275e-003, -9.500253e-003, 7.140970e-002, -6.085449e-002, 7.303968e-002, -2.853375e-002, 1.537052e-002, -8.800662e-003, 5.693143e-002, -3.719054e-002, 2.262586e-002, -1.154812e-002, 7.742916e-002, -4.809260e-002, 6.321464e-002, -1.298142e-002, -2.859463e-002, 8.246435e-002, -1.562446e-002, 4.139586e-002, 7.018539e-003, 1.891304e-003, 2.033309e-002, 1.959093e-002, 2.706249e-002, -1.994845e-002, 8.374075e-002, -1.110487e-002, 5.790823e-004, -3.889051e-004, 1.309572e-002, 8.467421e-002, -4.939836e-002, -3.649713e-002, 1.430233e-002, -7.124131e-002, 1.088712e-001, -1.052888e-002, -1.965910e-002, 4.886755e-002, -1.751305e-002, 4.342338e-002, -3.296294e-003, 5.231364e-003, -4.067066e-005, -1.408593e-002, 6.445326e-003, 2.242071e-002, 2.454967e-002, -3.426880e-002, 6.175475e-002, -3.938324e-002, 4.629808e-002, 1.185916e-001, -1.489548e-001, 6.930698e-002, 1.049902e-001, -6.742262e-002, 3.416204e-002, -8.157847e-002, -6.579877e-002, 7.090425e-002, -1.152682e-002, 4.343112e-002, -2.239557e-003, 2.531105e-002, 1.249959e-002, -2.513829e-003, 1.645498e-002, 2.592911e-002, 2.337786e-002, -4.215387e-003, 5.063761e-002, -2.610767e-002, 6.159060e-002, -6.146899e-002, -2.726888e-002, 1.052357e-001, -1.005373e-003, -1.469751e-001, 1.221656e-001, -4.121529e-002, 7.657291e-002, 1.757447e-002, -8.250113e-002, 3.339960e-003, -2.425565e-002, 1.643673e-002, -4.211237e-002, -3.637853e-002, -1.332960e-002, -1.298227e-003, 5.239516e-004, 1.225365e-002, 8.485693e-003, -5.652252e-002, -2.311295e-004, -2.350142e-002, -4.741357e-002, 1.563054e-001, -1.247954e-001, 1.416274e-001, 3.264013e-002, 5.586406e-002, -1.632503e-002, 2.142931e-002, -1.099972e-002, 7.658852e-002, -3.023222e-002, 2.811951e-002, 1.526873e-002, 5.249038e-002, 3.299350e-002, 3.183875e-003, 3.205956e-002, 1.110875e-002, 2.326746e-002, 1.366404e-002, 1.761617e-002, -2.941550e-002, 1.658628e-002, -2.840314e-003, -3.187381e-002, -6.004148e-002, -1.907911e-002, 5.401233e-003, -7.584363e-002, 6.330879e-002, -8.601338e-003, 8.497900e-004, -1.440721e-002, 4.664263e-002, 5.168869e-004, 3.134501e-002, -6.420530e-003, -1.081300e-002, -2.304104e-002, 2.817589e-002, 1.469760e-002, -3.686121e-002, -7.508108e-003, 2.110072e-002, 2.070555e-002, -2.482467e-002, 2.701674e-002, -2.933786e-002, 8.866181e-002, -5.845708e-002, -4.632831e-003, 3.654060e-002, -1.797328e-002, -3.031389e-002, 6.175334e-002, 3.007292e-002, -3.623541e-002, 1.887781e-002, -1.081898e-002, 7.702540e-003, -7.840128e-003, -2.642331e-002, 1.742231e-003, -5.552668e-003, -7.851627e-003, -2.046862e-002, 6.169732e-002, 7.753546e-003, -1.988437e-002, 6.998897e-002, -7.467107e-003, -4.976502e-002, 1.189728e-002, -1.924276e-003, 2.309839e-003, 3.536964e-002, 3.027733e-002, -5.437500e-002, 3.876186e-002, 3.297988e-002, -2.241946e-002, 6.270531e-003, -3.158401e-003, -1.900287e-002, -6.753301e-004, 1.109567e-002, 2.267971e-002, -1.727361e-002, -2.055514e-002, -3.039897e-002, 3.589695e-002, -4.272149e-003, -3.455746e-002, 1.262143e-002, 6.294711e-002, -1.981903e-002, 3.504363e-002, 2.353170e-002, 1.544104e-002, -2.804467e-002, 3.905289e-002, -9.544785e-003, 5.780432e-003, 8.307026e-003, 3.674917e-003, -3.433968e-003, -1.425990e-002, -2.640269e-002, -7.609299e-003, 9.505042e-003, 4.929314e-002, -2.052227e-002, -2.583253e-002,

© ISO/IEC 2004 — All rights reserved

Documents
Document Sharing Hub
Full document details: ISO_IEC 15938-3_2002_Amd 1_2004

1.520895e-002, -1.424053e-002, 2.835951e-002, 1.987963e-002, -3.341528e-002, 5.345634e-002, -1.931766e-002, 2.938333e-002, 1.521714e-003, -2.644581e-002, 2.383726e-002, 1.866615e-002, -1.530457e-002, 2.955534e-002, 6.953451e-003, -1.623369e-002, -1.847396e-002, -2.061111e-003, -1.733402e-002, 3.860286e-003, 2.065610e-002, 1.371817e-002, 5.060975e-003, -8.576042e-003, 7.097371e-003, 1.423490e-002, -1.452285e-002, -3.954800e-003, 2.806410e-002, 6.543909e-002, -3.460633e-002, 3.049071e-003, 4.081980e-002, -2.758902e-002, 3.873219e-003, 2.636286e-003, -5.115197e-003, 1.583570e-002, -1.259723e-002, -1.140583e-002, -1.683078e-003, 5.297020e-004, -7.323947e-003, 6.906304e-003, 9.074478e-003, -1.440051e-002, 2.600070e-002, 7.353256e-003, -4.467440e-002, 5.828331e-002, 2.563589e-002, -2.913859e-002, -1.428382e-002, 3.913254e-003, -2.891239e-003, -1.071383e-003, 3.129976e-002, -7.836079e-003, -8.387939e-003, 9.625530e-003, 8.873924e-003, 5.598841e-003, -4.564944e-003, -6.652696e-003, -5.137772e-003, -1.561717e-002, 1.143637e-002, 1.454100e-002, 1.836411e-003, -1.143785e-002, 3.723314e-003, 2.047469e-002, 6.268059e-003, -1.169377e-002, 3.437298e-002, 4.740761e-002, -2.979230e-002, 1.688656e-002, -1.845293e-002, 2.858940e-002, -1.838786e-002, -7.548891e-003, 2.325936e-002, -8.337607e-004, -1.032037e-002, -6.161538e-003, 4.075602e-003, 2.452885e-003, -5.638793e-003, -1.110258e-002, 6.915727e-003, 1.085918e-002, 9.812522e-003, -1.187076e-002, 1.184623e-002, 1.243175e-003, 3.224772e-002, -3.393018e-002, 1.390651e-017, 5.860608e-003, -4.181574e-003, -6.076899e-003, 2.237239e-002, -3.403119e-002, 3.879241e-002, -6.949406e-003, 7.813644e-003, 5.019799e-003, 2.608116e-002, -1.191745e-003, 1.191745e-003, -2.608116e-002, -5.019799e-003, -7.813644e-003, 6.949406e-003, -3.879241e-002, 3.403119e-002, -2.237239e-002, 6.076899e-003, 4.181574e-003, -5.860608e-003, 1.483417e-001, -1.598611e-001, 7.056297e-002, -6.111901e-002, 4.712175e-002, 1.015858e-002, -9.646745e-003, 6.685473e-002, -1.596819e-002, -2.648836e-003, -4.264241e-003, 4.065986e-002, 5.854092e-003, -1.714962e-002, -4.218820e-002, -1.995872e-002, 2.061723e-002, -1.882375e-002, -3.317627e-002, 3.258922e-002, -2.868027e-002, 4.596965e-002, -1.532464e-001, -1.603061e-001, 1.536258e-001, -1.204048e-001, -5.969550e-003, -8.775519e-002, -1.066509e-002, 6.365091e-002, -5.824981e-002, -8.601540e-004, -1.118962e-002, 1.593182e-002, -4.610811e-002, -2.930472e-002, -1.404546e-003, -2.269734e-002, -2.763743e-002, -6.985222e-002, 4.254612e-002, -1.026574e-002, -5.078230e-002, -2.188914e-002, -6.316357e-002, 1.395251e-001, 7.591609e-002, -1.096531e-001, 1.191900e-001, -5.961532e-002, 1.265124e-001, -6.457621e-002, 4.859081e-003, 6.298874e-002, -4.130715e-002, -5.954405e-003, -3.320755e-002, -3.510082e-003, 1.526067e-003, -3.762629e-002, -1.010584e-002, -4.221562e-002, 4.532915e-002, -1.139654e-002, -5.868198e-002, 9.931995e-002, -1.266250e-002, -1.449667e-002, -1.025443e-001, -7.778317e-002, 6.355846e-002, 2.135869e-002, 1.210461e-002, -5.486129e-002, 9.120560e-002, -6.346855e-002, -2.241487e-002, 3.845350e-002, -2.857905e-002, -1.076061e-002, -3.667564e-002, -2.944725e-002, 3.229492e-002, 2.726255e-002, 5.522364e-002, -2.667771e-002, -2.725076e-002, 7.066765e-002, -4.625164e-002, -4.103670e-002, 1.027960e-002, 3.358318e-002, -2.047837e-003, -7.173062e-002, 6.455560e-002, -1.625633e-002, -4.278992e-003, -8.880879e-002, 5.051053e-002, -8.961090e-003, -3.535825e-002, 1.705245e-002, -2.216533e-002, 1.687778e-002, -4.342774e-003, -1.983631e-002, 3.399285e-002, -9.399046e-003, -1.023718e-002, 6.303842e-002, -3.214686e-002, 3.250881e-002, -8.102469e-002, 6.085844e-002, -5.389252e-002, 7.035215e-002, -1.830435e-002, -9.506116e-002, 4.636277e-002, -1.875524e-002, 6.221112e-002, -4.607708e-002, 1.293539e-002, 9.336606e-003, -6.724127e-002, -1.759571e-002, -2.094238e-002, 2.587514e-003, 1.136268e-002, -4.851210e-003, -1.248343e-002, -3.750054e-002, -8.200007e-002, 2.263377e-002, 1.428609e-002, 3.721280e-002, 2.258504e-003, -1.926210e-002, -3.613520e-002, 1.142564e-002, 7.799322e-003, -2.289589e-002, 1.877562e-002, -3.754131e-002, -1.313526e-002, -5.422992e-003, -5.427236e-002, -3.612599e-003, -1.782084e-002, -2.017571e-003, 7.967764e-003, -1.274609e-002, 2.787837e-004, 8.063906e-003, 1.923965e-002, 2.254637e-002, -5.030661e-002, -2.354609e-002, -4.274278e-002, -5.082801e-002, 8.120952e-003, 4.050836e-002, -7.093704e-002, 2.882460e-002, -3.919687e-003, -2.181513e-002, -2.937882e-002, -2.880022e-002, -3.237467e-002, 6.047046e-003, -2.585645e-002, 4.820470e-003, -1.644282e-002, -9.318765e-003, 2.297950e-002, -1.836466e-002, -1.126177e-002, -5.410144e-003, 8.383424e-003, -1.564404e-002, -8.791375e-003, 4.769215e-002, -2.062617e-002, -2.262240e-002, -6.609678e-003, 2.514249e-002, -3.191403e-002, 1.039310e-002, 9.641326e-003, 7.765209e-003, -8.274665e-003, -1.831802e-002, -2.377264e-002, 1.438760e-002, -2.951483e-002, 7.002840e-003, 4.053484e-004, -2.627295e-002, 9.871852e-003, 1.446563e-002, -9.894612e-003, -1.465466e-002, -3.233593e-003, -1.497604e-002, 3.099887e-002, -6.690693e-002, -1.566164e-003, 6.346398e-003, 2.610380e-002, 1.550973e-002, -3.180357e-002, -6.485081e-003, -2.913269e-002, 5.203428e-003, -2.304383e-003, -1.673967e-002, -2.248467e-002, 1.068006e-002, -1.318982e-003, -5.679745e-003, 3.777168e-003, -8.342468e-003, -4.969563e-003, -1.524079e-002, 1.810125e-002, -2.501326e-003, -3.306631e-002, -1.975801e-003, 2.060019e-002, -2.187639e-002, 2.726297e-002, -1.249341e-003, -3.822489e-003, -1.483634e-002, -2.639614e-002, 1.516279e-002, -1.034562e-003, 3.865291e-003, -2.784944e-003, -2.188899e-002, -1.264908e-002, 1.709525e-002, 7.654458e-003, -1.161560e-002, -7.847091e-003, 3.769777e-003, -5.997898e-003, -5.048329e-003, 2.650454e-002, -1.085259e-002, -1.439977e-002, -1.231834e-002, 2.652901e-003, -2.778606e-002, 3.332192e-002, -8.123350e-003, 4.960824e-003, -1.140792e-002, -1.517797e-002, 2.596941e-003, -4.032181e-003, -1.569679e-002, -7.525230e-003, -

© ISO/IEC 2004 – All rights reserved
Documents
Document Sharing Hub
Full document details: ISO_IEC 15938-3_2002_Amd 1_2004

2.590415e-003, 6.068579e-003, 8.808047e-003, 1.974104e-003, -1.409473e-002, -5.110098e-003, 3.397720e-003, -8.292438e-003, 5.795528e-003, -1.720434e-004, -2.398065e-002, -3.460195e-003, 3.490046e-002, 2.152861e-002, 7.408193e-003, -9.528130e-003, 4.625314e-003, -2.282549e-002, -1.442756e-002, 8.239960e-004, 2.996419e-003, -1.312838e-002, -8.974942e-003, 1.207457e-002, -2.739886e-003, 4.491308e-003, 8.766152e-003, -1.588243e-002, -3.446205e-003, -6.275729e-003, 8.407393e-003, -6.034146e-004, -3.229856e-002, 2.074986e-002, 6.505330e-003, -1.327507e-002},
{-8.479876e-003, 6.085839e-003, 1.705423e-002, -2.815145e-003, -3.097318e-002, 3.681167e-002, -5.301159e-002, 7.975517e-003, 5.573362e-002, -5.082351e-002, -2.321904e-003, 2.890324e-002, 2.890324e-002, -2.321904e-003, -5.082351e-002, 5.573362e-002, 7.975517e-003, -5.301159e-002, 3.681167e-002, -3.097318e-002, -2.815145e-003, 1.705423e-002, 6.085839e-003, 2.342352e-001, -1.264315e-001, 9.961995e-002, -6.411764e-003, 7.129924e-002, 9.836148e-003, -2.366098e-002, 4.337254e-002, -3.386341e-002, 7.767258e-003, -1.413209e-002, 1.349417e-002, -4.132924e-002, -9.372237e-003, 4.253990e-002, -4.329770e-003, -2.507415e-002, 3.621602e-003, 3.666354e-002, 2.625273e-002, -2.014437e-002, 6.862224e-002, -8.202159e-002, -2.569175e-002, 9.124943e-002, 2.085551e-002, -3.811906e-003, 1.706445e-002, -3.701336e-002, 1.065068e-001, -4.276261e-002, -1.756126e-003, -4.666666e-004, 2.966125e-002, -1.228128e-002, -1.210399e-003, 2.417324e-003, 1.120355e-002, 8.452762e-004, 3.982764e-002, 6.096462e-002, -8.120403e-002, 1.319980e-002, 3.430840e-002, 1.768988e-003, 4.037976e-002, 8.443064e-002, 3.148961e-002, -9.211135e-002, 1.029357e-001, -5.750463e-002, 4.540194e-002, -1.751943e-002, 1.245521e-002, -2.086542e-002, 5.553443e-003, -2.717906e-002, 2.475632e-002, -8.655895e-003, 4.994023e-003, 3.069625e-002, -7.531488e-003, -7.328395e-002, 2.990677e-002, 4.633541e-002, -4.031418e-002, 7.988632e-002, -1.293101e-001, 6.930691e-002, -7.753066e-002, 1.544782e-001, -1.896991e-002, 3.684488e-002, 5.590298e-003, -3.932334e-003, 5.281800e-003, 3.022416e-002, 5.941382e-002, -3.179971e-002, 7.508419e-003, 1.009866e-002, -1.462047e-002, -3.705886e-002, -6.280052e-002, -7.395988e-003, 1.855373e-002, -5.523698e-002, -4.667466e-003, 2.426748e-002, 1.150052e-002, -1.355020e-002, 1.155524e-001, -4.150133e-002, -8.394556e-002, 5.387893e-002, 1.215444e-002, 3.276261e-002, 2.734946e-003, 5.130556e-002, 3.298479e-002, -1.014906e-002, 1.815448e-002, 1.534620e-002, 2.424975e-002, 1.517826e-002, -9.419727e-003, -3.936993e-002, -3.714639e-002, -1.504173e-002, 3.649352e-002, -1.364625e-002, 1.672175e-002, -2.766686e-002, 1.029065e-001, -1.156579e-002, 1.668943e-001, -4.157666e-002, 2.474393e-002, -2.541272e-002, 1.400349e-002, 4.056820e-002, -5.488422e-002, 1.392282e-002, -1.216168e-002, -3.289914e-002, -5.738041e-003, -1.725662e-002, -7.898862e-003, 2.668823e-002, -1.216222e-002, -2.761781e-002, 5.317164e-003, -4.403309e-002, 7.214734e-002, 9.541290e-003, -1.367917e-002, -8.155526e-004, -9.932395e-002, -2.872799e-002, 9.014415e-003, -1.676178e-002, 3.155581e-002, 1.321920e-002, -4.782917e-002, 8.431240e-002, -1.524909e-002, -2.865275e-002, 1.540560e-002, 1.826845e-002, 2.729976e-002, -1.865916e-002, -2.329953e-003, 3.398037e-002, -4.094531e-003, -4.085864e-002, 2.893388e-002, -5.214125e-002, 1.829271e-002, 6.599892e-002, -8.457716e-003, 4.469204e-002, -8.537813e-002, 9.998080e-003, 4.051012e-002, 5.394287e-003, 1.019494e-002, 5.199035e-002, -3.079445e-002, -2.373419e-003, 1.107606e-002, -9.102706e-003, -4.688702e-003, -3.287615e-003, -3.719190e-002, -2.114159e-002, -1.116025e-002, 1.326860e-002, 7.040212e-003, -5.527394e-002, 3.015061e-002, 6.005705e-003, 2.870645e-002, -1.253969e-002, 7.387719e-002, -5.550068e-002, 5.942807e-002, -6.059807e-003, 4.119264e-003, 1.111093e-002, -5.446797e-002, 9.303797e-003, 1.416311e-002, 1.467969e-002, 2.058330e-002, -1.390987e-003, 9.415306e-003, 1.966374e-002, -1.244523e-002, -1.607212e-002, -9.243218e-003, -4.122244e-003, 1.005531e-002, -3.475368e-002, 1.266834e-002, 3.201481e-002, 6.027112e-004, 4.206428e-002, 1.173707e-002, 9.691941e-003, 1.391218e-002, 3.199439e-002, -3.622382e-002, 2.409758e-002, 1.954229e-002, 5.645702e-003, 1.882462e-002, 1.326091e-002, 3.356909e-003, -1.049579e-002, -9.694574e-004, 5.321101e-003, 1.655949e-002, -1.804301e-002, -3.165405e-002, 1.384818e-002, -3.295422e-003, -4.502316e-002, -9.565799e-003, 8.578072e-002, -4.850419e-002, 1.018568e-002, -3.752633e-003, 6.232651e-003, 1.275132e-003, 1.295408e-002, 3.087233e-002, -1.814538e-002, 1.951805e-002, 2.761033e-002, -2.588143e-003, -1.316232e-002, 6.402757e-003, 2.188126e-003, 3.607286e-003, -3.833809e-003, 5.482866e-003, -6.798594e-003, -5.515910e-002, -6.870077e-003, 9.082804e-003, -1.527259e-002, 1.386128e-002, -9.468245e-003, -1.582675e-002, 3.318563e-002, 1.136125e-002, 2.399108e-002, -1.750859e-002, -3.650952e-002, 2.571672e-002, 1.827889e-002, -6.793112e-003, -3.439537e-003, 2.991787e-003, 9.027567e-003, 4.858331e-004, 8.053295e-003, 5.499287e-003, 1.677039e-004, -3.053289e-002, -5.540067e-003, -2.205770e-002, -2.855357e-002, 1.627048e-002, 3.744830e-002, 1.925122e-002, -6.610991e-002, 5.928129e-002, 4.728250e-002, -5.017271e-002, -2.289296e-003, 2.667869e-002, -8.503505e-003, 1.646717e-002, 5.762552e-003, -1.020672e-002, 4.113258e-003, 2.732644e-003, -1.567479e-003, -3.855625e-003, 6.948214e-003, 1.277251e-003, -1.809952e-002, -4.131597e-002, 5.717486e-003, 5.222029e-003, -3.574598e-002, 4.701546e-002, 3.208639e-002, -1.857200e-017, -1.114625e-002, 1.607624e-002, 3.476889e-003, -8.564744e-003, -1.089859e-002, 9.544291e-003, 1.985458e-002, -1.278514e-002, -7.476246e-003, 2.281793e-002, -4.824127e-003, 4.824127e-003, -2.281793e-002, 7.476246e-003, 1.278514e-002, -1.985458e-002, -9.544291e-003, 1.089859e-002, 8.564744e-003, -3.476889e-003, -1.607624e-002,

© ISO/IEC 2004 — All rights reserved

Documents
Document Sharing Hub
Full document details: ISO_IEC 15938-3_2002_Amd 1_2004

1.114625e-002, 7.864232e-003, -1.854830e-001, 8.783518e-002, 6.204525e-002, -9.427994e-002, 4.956323e-002, 1.984580e-002, -2.350230e-002, 3.535267e-002, 3.179341e-002, 8.966251e-003, -6.399587e-003, -1.603070e-004, 1.430027e-002, -3.954114e-002, -1.169577e-002, -4.660350e-002, -4.634057e-002, 8.730090e-002, -1.530925e-001, 5.852746e-002, 4.459956e-002, -1.569389e-001, 4.199610e-002, 3.739260e-002, -5.400937e-002, -3.281267e-002, 6.948945e-003, 3.680737e-003, 4.362765e-003, 1.478877e-002, 8.018086e-003, 3.358563e-002, 1.755314e-002, -4.895705e-003, -3.256715e-002, -6.553383e-002, 1.856298e-003, -8.154277e-003, 1.623083e-002, -4.338615e-002, 2.554939e-003, 1.733152e-002, 3.435596e-005, -6.648400e-002, -1.952846e-003, -1.938966e-001, -4.068863e-002, 4.317786e-002, 3.670357e-003, -3.999308e-002, 2.705071e-002, 5.673957e-004, -4.865557e-002, -9.826801e-003, 2.043642e-003, -1.738677e-002, -1.570745e-002, 1.353174e-002, 1.674168e-002, -7.721138e-004, 5.808257e-003, -3.379768e-002, 2.863465e-002, 2.288447e-002, 1.792674e-002, -5.932377e-002, 4.789011e-002, 5.496216e-002, 2.424423e-002, -1.345333e-001, 2.053503e-002, -3.014559e-002, -4.252565e-002, 1.754351e-002, 4.183737e-002, 6.844948e-003, 9.325326e-004, 2.409771e-002, 3.928187e-003, 4.268537e-003, -1.578706e-002, -1.236106e-002, 1.734916e-002, -1.518211e-002, -6.001637e-003, 1.260326e-002, -3.264084e-002, -3.423005e-003, -6.573349e-002, 5.906615e-002, -9.944994e-002, 3.339715e-002, -5.392383e-002, -5.212928e-002, 7.395616e-002, 6.157591e-002, 2.200523e-002, -2.984402e-002, 2.188618e-002, 3.553518e-002, -1.979988e-002, -2.370890e-002, 1.288678e-002, 1.898419e-002, -1.517178e-003, -2.366099e-002, 3.367182e-002, -2.342739e-002, -3.016362e-002, -1.598379e-002, -5.672554e-002, 4.311454e-002, 4.104135e-003, -4.224882e-002, -8.303167e-002, -2.830548e-002, 6.231585e-003, 1.185271e-002, 2.340063e-003, -4.414828e-002, 3.624860e-003, -6.061939e-003, -4.570794e-003, 5.737474e-003, 4.138701e-003, -2.740602e-003, 2.933972e-002, -4.966335e-003, -5.044628e-002, -6.591882e-002, -5.475324e-003, 1.016652e-002, -2.311276e-003, 4.421270e-002, 1.432460e-002, -2.618261e-002, -4.981483e-002, -1.692070e-003, -5.477300e-003, -3.915065e-003, 2.796154e-002, -1.153029e-001, -2.367995e-002, 6.083476e-003, -2.720277e-002, 8.938655e-003, 2.375372e-002, 1.044125e-002, -3.625435e-004, -4.315148e-003, 1.903308e-002, -2.394875e-003, -1.164939e-002, -4.035367e-002, 2.323518e-002, 3.815419e-002, -6.490550e-002, 6.380671e-002, -1.239400e-001, 5.513347e-002, -3.156594e-002, 1.637142e-002, -2.483621e-002, -6.865289e-002, 4.923033e-002, 3.048737e-002, -3.243007e-002, 4.334307e-002, 1.607918e-002, -1.200244e-002, -1.416473e-002, -8.243709e-004, 7.268872e-003, 1.384307e-003, 6.119009e-003, -2.401106e-002, 2.098126e-002, -6.198803e-002, -2.246038e-002, 7.943169e-002, -7.191314e-002, -1.528057e-003, -2.497897e-002, 7.602727e-002, -7.308626e-002, -4.748485e-002, 3.245896e-002, -3.557638e-002, -3.253820e-002, 5.492338e-002, 7.828254e-003, -5.611726e-003, -2.109894e-002, -2.250353e-003, 1.143198e-002, 3.606140e-003, 1.720751e-002, -4.492353e-003, -7.461332e-003, -2.278533e-002, 2.540917e-002, 1.513431e-002, -5.663243e-002, 4.248150e-002, 4.108334e-002, -1.137457e-001, 4.533949e-002, -4.498166e-002, -1.245738e-002, -1.882766e-002, -1.893409e-002, 3.503052e-002, -8.948832e-003, 2.096276e-002, 2.841494e-003, -1.553293e-002, -9.111328e-003, 2.675185e-004, 4.437616e-003, -3.756394e-003, 1.496565e-002, 5.436752e-003, 3.334819e-003, -2.146337e-002, 1.161632e-002, -2.219552e-003, -1.213433e-002, -2.581764e-002, -3.728284e-002, 1.470611e-002, -3.964644e-002, -5.801366e-002, 2.438040e-002, 1.759561e-002, -2.875715e-002, 4.644082e-002, 2.402824e-002, -1.427642e-002, -1.955130e-002, 4.190266e-003, 4.002090e-003, 4.821447e-003, 1.004164e-002, 6.506883e-003, 9.573180e-003, 1.451646e-002, 1.898950e-002, -3.633143e-002, 2.107291e-002, -6.533914e-003, -2.220628e-002, -4.813198e-002, -3.124145e-002, -4.107375e-003, 2.525435e-003, -2.743631e-002, -6.197502e-003, 4.232585e-002, 2.418233e-002, -3.319468e-003, -1.863732e-002, 4.277920e-003, 7.808367e-003, 4.973022e-003, -2.720433e-003, 7.764561e-003, 1.725195e-002, 1.247449e-002, -3.333588e-003, -8.999853e-003, 2.313225e-002, -3.935527e-002, -3.568797e-002, 2.588891e-002, -3.520144e-002, 3.437361e-002, -2.925437e-002, -5.201338e-002, 9.643992e-003, -8.881486e-003, 1.901364e-002, 6.275919e-003, -3.511063e-003, 6.571086e-003, 7.744822e-003, -6.520534e-003, -4.711611e-003, 3.595648e-003, -4.638720e-003, 5.968889e-003, 1.818065e-002, 6.284261e-003, -1.970317e-002, -8.179505e-003, 6.087713e-004, 1.885820e-002, -6.724105e-002, -1.616969e-002},

{1.642398e-002, -1.474730e-002, 2.494143e-002, -2.800930e-002, 2.312739e-002, -1.708360e-002, -2.054174e-002, 9.840845e-003, -7.747190e-003, 2.077454e-002, -1.248306e-002, 1.234835e-002, 1.234835e-002, -1.248306e-002, 2.077454e-002, -7.747190e-003, 9.840845e-003, -2.054174e-002, -1.708360e-002, 2.312739e-002, -2.800930e-002, 2.494143e-002, -1.474730e-002, -1.505556e-001, 1.817482e-001, -7.785622e-002, 3.920904e-002, 3.086896e-002, 2.050556e-002, 3.658213e-002, 1.385230e-002, 4.395900e-002, 2.167050e-002, 4.629847e-002, 4.206591e-002, -1.218354e-002, 1.435751e-002, -1.368529e-003, 2.862895e-002, 1.975699e-002, 1.160116e-003, 6.049630e-003, 1.830971e-002, 5.357015e-002, -6.134528e-002, 1.638677e-001, 1.279727e-001, -1.869151e-001, 1.274949e-001, -2.589055e-002, 6.823611e-002, -1.915670e-002, -3.548011e-002, 2.943526e-002, -2.344737e-002, -1.260033e-002, -1.258759e-002, -1.221769e-003, 1.977908e-003, 1.151271e-002, 4.365195e-002, 1.308007e-002, -1.636591e-003, -5.195364e-002, -5.385111e-003, 9.951158e-003, -1.947743e-002, 6.029615e-002, -1.389494e-001, -9.005847e-002, 3.275121e-002, 7.966889e-003, -4.023512e-002, 5.016740e-002, -8.771301e-003, 7.159279e-002, -4.701839e-003, 3.141288e-002, 2.285023e-002, 1.548967e-002,

© ISO/IEC 2004 – All rights reserved
Documents
Document Sharing Hub
Full document details: ISO_IEC 15938-3_2002_Amd 1_2004

1.685804e-002, 2.186597e-002, 3.198542e-002, -1.044135e-002, 1.122886e-003, 1.493033e-002, 4.559072e-002, -2.762328e-002, 4.374798e-002, -1.477842e-002, -4.475519e-003, 8.637051e-002, 4.229388e-002, 2.827025e-002, -6.167335e-003, 6.883607e-002, -3.659478e-002, 4.486454e-002, -5.369708e-002, -1.861605e-002, -6.367578e-003, 1.729731e-002, -2.911814e-003, -3.483564e-002, -2.681184e-002, -1.990388e-002, -1.561509e-003, -1.406306e-002, -8.720302e-003, -1.057000e-002, 9.082074e-002, -2.152606e-002, 3.491512e-002, 7.548621e-002, -1.430136e-002, -7.907856e-002, 1.163167e-002, 6.806971e-002, -7.742653e-002, 1.991268e-002, 4.811572e-003, 6.249194e-002, -1.231113e-002, 2.259683e-002, 2.287603e-002, -8.097790e-003, 1.327580e-003, -8.807614e-003, -1.670989e-002, -1.183304e-003, 2.425570e-002, -1.310938e-002, 3.517035e-002, -3.058070e-002, 2.254176e-002, -7.862589e-002, 9.763220e-002, 3.103680e-002, 8.715180e-002, -4.407034e-002, -3.589550e-002, 4.080381e-002, 3.710688e-002, -3.468477e-002, -5.487621e-002, 4.714205e-002, 2.753510e-002, 4.753541e-003, 3.511363e-003, -2.601869e-002, -4.370158e-003, -9.579063e-003, -1.917201e-002, 3.304736e-003, 8.109788e-002, -7.755196e-002, -8.919601e-003, 2.942749e-002, 6.238133e-002, 3.847139e-003, -6.232860e-002, -2.303874e-002, -1.416646e-002, 2.385675e-002, 6.700543e-002, -2.150939e-002, 1.064255e-002, 8.323527e-002, -1.559006e-002, 2.282769e-003, 1.327981e-002, -3.553120e-003, 3.233825e-003, 1.008470e-002, 4.748414e-003, 3.374933e-003, -1.460819e-002, -3.698393e-002, 6.575560e-002, -3.447925e-003, -3.254066e-002, 3.008369e-003, -7.190196e-003, -2.634961e-002, 1.047605e-002, 3.922938e-003, 4.302789e-003, -1.332330e-003, 3.896699e-002, 2.027588e-002, -2.850736e-002, 1.097407e-004, 2.740799e-002, 3.586482e-003, -1.293347e-002, -1.430405e-002, -1.836571e-002, -1.242189e-002, 1.000683e-002, 1.424086e-002, 3.258768e-002, -3.488431e-002, -1.729324e-002, 2.804417e-002, -2.705541e-002, -1.778503e-002, -2.539281e-002, 9.324469e-003, 7.551404e-004, -1.348331e-004, 5.731009e-002, -1.321360e-002, -1.247872e-002, 1.029213e-002, 2.210872e-002, -5.874707e-004, -1.060184e-002, -4.294466e-003, 4.828880e-003, 5.901225e-004, -1.002069e-002, -2.245644e-002, -2.673706e-003, 4.054396e-004, 5.691954e-004, -8.337538e-003, -3.084680e-002, 7.332143e-003, -1.289942e-002, 3.043173e-002, 2.722488e-002, -1.619101e-002, 5.275923e-002, -3.261136e-003, -2.559732e-002, 3.700989e-002, 1.575420e-002, -3.225447e-002, -3.324147e-003, 2.132533e-003, -4.454107e-004, 2.433003e-003, -5.772466e-003, -2.299152e-002, -7.292779e-003, -1.252231e-003, -1.109478e-002, 5.554797e-003, 4.519481e-003, 6.653136e-003, -4.166041e-003, 3.014461e-002, -4.923473e-003, -2.257213e-002, 5.074709e-002, -1.937247e-002, -1.360578e-002, 5.579171e-002, 2.540421e-003, -3.177878e-002, -6.678208e-004, 1.253606e-002, -7.584973e-003, -6.276465e-003, 2.793211e-003, -2.141397e-003, -1.580257e-002, -1.777972e-002, 7.283029e-004, 1.263320e-002, -2.459761e-002, -1.811104e-002, 4.044990e-002, 1.599064e-002, -1.170222e-002, 3.413373e-002, 9.365268e-003, -1.949875e-002, 2.603459e-002, 2.184846e-002, -1.914273e-002, -1.267928e-002, 1.609071e-002, 2.239951e-003, -1.096427e-002, -9.612819e-003, -7.896667e-004, 4.728993e-003, 6.324638e-003, 2.993426e-003, -7.508448e-003, -1.393781e-002, -2.634236e-003, 2.416117e-002, 5.264669e-003, 6.385172e-003, 6.719870e-003, -1.858304e-003, 1.029575e-002, -2.515851e-002, 2.882069e-002, 8.039703e-003, -1.387648e-002, 2.937897e-003, 3.089416e-002, -1.674068e-002, -1.091781e-002, 1.269143e-003, -3.862157e-003, -4.800134e-003, -5.308743e-003, -1.404932e-003, -2.683241e-003, -2.737735e-003, 1.855153e-003, -1.835655e-003, -6.277612e-003, 2.793606e-002, 1.108347e-002, 3.356207e-003, 1.328654e-002, 1.205637e-002, -5.992882e-018, -1.780286e-003, 9.316438e-003, -9.094879e-003, -1.455171e-003, -6.050491e-003, 1.646369e-002, -1.577886e-002, -2.437980e-002, 1.250586e-002, 1.752600e-002, -7.118383e-003, 7.118383e-003, -1.752600e-002, -1.250586e-002, 2.437980e-002, 1.577886e-002, -1.646369e-002, 6.050491e-003, 1.455171e-003, 9.094879e-003, -9.316438e-003, 1.780286e-003, -1.331514e-001, 3.953565e-003, -5.371582e-002, 5.550125e-002, 2.834660e-002, 3.033686e-003, -1.774271e-003, 7.614363e-003, 3.604789e-002, -9.829696e-004, 2.008276e-002, 2.673740e-002, -1.041474e-002, -2.645972e-002, -4.497423e-002, 9.539100e-004, -9.753701e-003, -2.028766e-002, 3.523577e-003, -3.217185e-002, 5.222510e-002, -5.092980e-002, 3.367589e-002, 6.213262e-002, -1.190481e-001, 1.452063e-001, -1.504961e-001, -4.628309e-002, 2.465432e-002, 2.571179e-002, -1.829653e-002, -4.675618e-002, 3.205428e-003, -2.165298e-002, -3.894100e-003, -1.741818e-002, -2.875089e-002, 2.611539e-003, -2.261514e-002, 1.514434e-003, 2.107597e-002, -3.856416e-002, -3.114143e-004, -1.153714e-001, 9.114854e-002, -9.951708e-002, -1.176673e-001, 6.193330e-002, -1.962691e-001, 1.074893e-001, -1.124493e-002, -1.316644e-002, -5.029544e-002, -2.072329e-003, 2.787180e-002, -1.614774e-002, 1.903825e-003, -2.087159e-002, 1.339162e-003, 2.182049e-002, -1.292829e-002, -7.477693e-003, -3.147941e-002, -2.766320e-002, -1.670161e-002, -1.039019e-002, 1.043771e-001, -1.137544e-001, 7.952114e-003, -6.767483e-002, -1.874833e-002, 1.780198e-001, -1.262820e-001, 2.664712e-002, 1.252060e-002, 2.406702e-002, 3.692445e-003, -2.026650e-002, 2.984567e-002, -1.807145e-002, -1.093675e-002, 6.555496e-003, 5.420351e-003, 2.819797e-002, -4.059559e-002, -3.990670e-002, 2.126456e-002, -4.243044e-003, 3.619836e-002, -1.947143e-001, 1.870393e-001, -2.771761e-002, 5.204518e-002, -9.533354e-002, -5.618173e-002, 8.750277e-002, -1.954140e-002, -1.223879e-004, -2.749395e-002, -4.260498e-003, 3.302246e-002, -4.133529e-002, -3.734226e-002, -2.386442e-002, -4.129523e-003, -6.580133e-003, -7.361120e-003, 3.415846e-002, -1.062105e-003, -2.898531e-002, -4.765811e-002, -6.916751e-002, 7.427590e-002, -5.806620e-002, -1.102451e-001, 2.032305e-002, 1.912052e-002, 1.031009e-002, -3.508545e-002, -

© ISO/IEC 2004 — All rights reserved

Documents
Document Sharing Hub
Full document details: ISO_IEC 15938-3_2002_Amd 1_2004

1.921976e-002, -8.182058e-003, 6.640122e-003, -7.533745e-004, -4.842589e-002, -1.047390e-002, -1.298995e-002, 6.631405e-003, 5.149524e-003, -8.960832e-003, -2.533214e-003, -2.851917e-002, -7.163115e-003, 3.296271e-002, 2.559236e-002, -5.183700e-002, 3.912789e-002, -4.269846e-002, 2.738943e-002, -9.655327e-002, 3.998422e-003, 2.804147e-002, -9.552746e-002, 2.971126e-002, 1.771013e-002, -1.948537e-002, -3.752635e-002, 7.480595e-003, -1.452483e-002, -7.944907e-003, -1.264975e-002, -4.148308e-003, 7.955462e-003, -5.912083e-003, 2.607675e-002, -1.832383e-002, -1.210245e-002, 3.077586e-002, 9.561164e-003, 3.283923e-003, -2.011842e-002, -1.726772e-002, -3.351215e-002, -2.697398e-002, -1.167663e-002, 2.786520e-002, 7.656070e-002, -2.813741e-002, -5.202178e-002, 3.195837e-002, -9.706156e-003, -4.678294e-003, -1.445704e-002, 1.271623e-002, 1.360769e-002, -1.916010e-002, -1.408767e-003, -5.223629e-004, 3.126802e-002, -3.374997e-002, -2.071899e-002, 3.458776e-002, 7.573148e-003, -1.258510e-002, -6.414333e-002, 7.991472e-003, -5.682320e-002, 2.478103e-002, 3.986701e-002, -5.719615e-002, -2.906275e-002, 4.066556e-002, -1.497326e-002, 1.850793e-004, -4.789198e-003, 1.692511e-002, 7.024299e-005, 7.058174e-003, 2.476529e-002, -1.275293e-002, -5.043609e-003, 5.026108e-003, 3.387545e-002, -2.310132e-004, -6.471469e-002, 5.635728e-003, -2.402187e-003, -6.535867e-002, -3.138408e-002, 1.595978e-002, -1.688275e-003, -3.460914e-002, 5.484577e-002, -7.901001e-003, -4.099541e-002, 7.681480e-003, 8.412006e-003, 5.182994e-003, -1.230967e-002, 4.980756e-003, 1.394471e-002, -5.951573e-003, -9.449116e-003, -4.975916e-003, 1.732202e-002, -3.340295e-002, -1.797889e-002, 6.088873e-003, -1.936593e-002, -1.031854e-002, -3.470747e-002, 2.240430e-002, -2.793046e-002, -4.066228e-003, 5.433790e-002, -3.870854e-003, -4.432736e-002, 7.976030e-003, 1.527476e-002, -9.180518e-003, -3.090373e-003, 1.233073e-002, 1.135055e-002, 6.369819e-003, 1.768220e-002, -3.304777e-003, -1.742955e-002, -3.658406e-003, 6.219281e-003, -3.866142e-002, -3.107776e-002, 1.340687e-002, -1.768874e-003, -3.750837e-002, -2.287998e-002, 3.696973e-003, 3.089395e-002, -3.177323e-003, -2.013318e-002, -3.635377e-003, 1.872244e-002, -2.076924e-002, 3.025219e-003, 6.635904e-003, 4.495074e-003, 1.075018e-002, -1.739360e-003, 3.795720e-004, -7.975302e-004, -8.299860e-003, -1.864009e-002, -1.159232e-003, 1.167936e-003, -1.172878e-002, -9.815939e-003, 1.416719e-002, -1.917144e-002, 2.620014e-002, -1.365546e-002, -8.852105e-003, 7.525450e-003, 1.979690e-002, -1.031915e-002, -2.284164e-002, 2.386851e-003, 3.093332e-003, 5.218685e-003, -1.978042e-003, 6.315361e-003, -9.882496e-004, 5.598785e-004, 2.200537e-003, -9.448561e-003, 1.687532e-003, -1.632999e-002, -8.179373e-003, 4.270605e-004, 1.759141e-002, 8.203970e-003, -5.988282e-002},

{-3.003509e-002, -2.017493e-002, 8.574960e-002, -9.870159e-002, 5.314015e-002, -9.500481e-003, -2.250674e-002, 2.065038e-002, -1.545027e-002, 3.338636e-002, -1.158518e-002, 1.326954e-003, 1.326954e-003, -1.158518e-002, 3.338636e-002, -1.545027e-002, 2.065038e-002, -2.250674e-002, -9.500481e-003, 5.314015e-002, -9.870159e-002, 8.574960e-002, -2.017493e-002, -2.948365e-003, 1.351787e-003, 2.606094e-002, 7.517834e-002, -7.489626e-002, 2.823893e-002, 4.597426e-002, 1.856376e-002, -3.115870e-003, -6.661324e-003, 2.296591e-002, 4.531771e-002, -1.487983e-002, 1.352309e-002, -4.999717e-003, 4.416200e-002, -3.468372e-002, 5.256436e-002, 5.355554e-002, -1.388007e-001, 1.063164e-001, -1.200328e-003, 3.920799e-002, 1.368509e-001, 1.558517e-002, -1.509591e-002, -3.109856e-002, 8.041627e-002, 1.811263e-002, -2.236547e-002, 1.924655e-003, 2.816782e-002, -2.805559e-005, -2.931188e-003, -2.486483e-002, 3.327236e-004, -1.931294e-002, 3.367440e-002, -1.050897e-002, 4.163666e-002, -2.707460e-002, -2.581761e-002, 5.035347e-002, -1.626615e-002, 2.884559e-002, -6.439658e-002, -1.449989e-001, 3.785790e-002, 5.615150e-002, -3.123737e-002, 3.711394e-002, -4.745170e-002, -2.157577e-002, 9.092777e-003, 5.326548e-003, 1.945944e-002, 2.757566e-003, 3.723802e-002, -2.807423e-002, 1.738974e-002, 2.468537e-002, 4.401933e-002, 1.311162e-003, 2.607132e-002, -3.762007e-002, 7.272029e-002, -2.660291e-002, 3.121343e-002, 2.639312e-002, -5.770429e-002, 4.769916e-002, -1.730532e-002, 8.845959e-002, -2.779766e-002, -6.974945e-003, 3.733407e-003, 7.615776e-003, 1.754677e-003, -8.048480e-003, 1.702150e-002, -2.548412e-002, 1.061779e-002, 6.975184e-003, 1.381423e-002, -5.224461e-002, -2.413003e-002, 4.524196e-002, -2.698247e-002, -2.258994e-002, 9.949132e-002, -4.389094e-002, 5.948801e-002, 1.791159e-001, -1.646986e-001, 2.794658e-002, -4.270653e-002, 7.604161e-003, 3.303509e-002, -1.882853e-002, 1.084137e-003, -6.006145e-003, -1.302638e-002, -1.446861e-002, 2.130716e-002, -3.917402e-002, -1.337032e-002, 2.434941e-002, 1.907266e-002, -2.329165e-002, 1.061338e-002, 3.377501e-002, -2.193319e-002, -5.099933e-002, 3.015007e-002, -1.056888e-001, -1.174433e-001, 1.970108e-002, 7.320062e-002, -3.723802e-002, -2.062116e-003, -3.353967e-002, -1.191057e-002, 1.149621e-002, 1.848377e-002, -2.565555e-003, 2.089491e-002, 8.275710e-003, 5.851289e-003, -2.942236e-003, 1.559144e-002, 2.389676e-002, -9.231714e-003, -3.153910e-002, -1.330231e-002, -2.400414e-002, -1.633051e-002, 8.554784e-002, 4.324328e-002, 1.677859e-002, 4.065850e-002, -9.267914e-002, 2.052778e-002, 3.813126e-002, 3.082672e-002, 1.228625e-002, 4.954446e-003, 5.159316e-003, 9.303372e-003, 4.722140e-003, -6.249123e-003, 6.717778e-004, -1.291114e-002, 1.202954e-004, 4.365394e-003, -5.964581e-003, 1.159555e-002, 2.686570e-002, -2.191893e-002, 2.206959e-002, -8.320012e-002, -2.736683e-002, 5.554546e-003, 1.728864e-002, -3.259096e-002, 4.250575e-002, 8.546691e-003, -2.187787e-002, -1.316686e-002, 3.363520e-002, 1.138248e-002, -1.052557e-002, -1.017081e-002, -8.416647e-003, 4.598423e-004, 5.223355e-004, -6.309679e-003, 9.058582e-003,

© ISO/IEC 2004 – All rights reserved
Documents
Document Sharing Hub
Full document details: ISO_IEC 15938-3_2002_Amd 1_2004

7.728814e-003, -1.975846e-002, -2.740952e-002, -2.208527e-003, 7.542710e-003, -1.552633e-002, 2.415397e-002, 9.831145e-003, -4.658701e-002, 3.604566e-002, -4.300333e-003, -2.203609e-002, 7.743082e-003, 2.719734e-002, 5.607699e-003, -1.826241e-002, -9.447765e-003, 2.724328e-003, -2.864543e-003, 2.502813e-003, -1.698659e-003, 3.249867e-003, 1.018919e-002, 1.784340e-003, 1.157118e-002, 8.002486e-003, 2.257763e-003, 1.853877e-002, 3.001730e-002, -3.395867e-002, 7.378139e-002, -2.337169e-002, 1.518744e-002, 1.622413e-002, -9.254918e-003, 3.295257e-002, -2.182177e-002, -7.830597e-003, 8.042795e-003, -6.365356e-004, -7.818358e-003, -8.987910e-003, -1.469142e-004, -4.140661e-003, -9.469930e-003, 1.917224e-002, 2.234471e-002, -2.279446e-002, 2.776948e-002, -3.560323e-003, 1.908279e-002, 6.146542e-003, -7.423567e-002, -2.076098e-002, -1.257084e-002, 2.669881e-002, 9.689215e-004, 2.304111e-002, -2.641714e-002, 1.130554e-002, 2.428260e-003, 6.553225e-003, -6.269443e-003, -1.566409e-002, -1.049686e-002, 4.186366e-003, -9.779849e-003, 2.096532e-003, 9.943585e-003, 3.383329e-003, 2.927292e-002, -1.843276e-002, 3.559944e-002, -4.609458e-003, 1.085184e-002, -2.566223e-003, -9.909125e-003, 5.396598e-003, 1.340125e-002, -1.932002e-002, 1.765375e-002, 1.724649e-002, -1.385650e-002, 6.721239e-003, -4.660719e-003, -1.549647e-002, -1.608214e-004, 2.832621e-003, 8.833331e-004, 7.853206e-003, -1.669243e-003, -8.102434e-004, 1.396807e-002, 3.249858e-003, 1.744025e-002, -1.547211e-003, -6.784604e-003, 2.566042e-003, -2.215570e-002, 2.012851e-002, -8.620508e-003, -4.403567e-003, 1.718401e-002, 6.328388e-004, 1.254386e-002, -2.569975e-002, 2.798963e-003, 3.324508e-003, -5.623763e-003, -4.179585e-003, 2.464381e-003, 2.452801e-003, 1.820682e-003, -9.114937e-004, 1.150443e-002, 1.189821e-002, -5.606993e-003, 1.554340e-002, -1.172144e-002, 2.906854e-003, -1.210500e-002, -1.238225e-002, 9.408841e-018, -4.341091e-003, 9.288168e-003, -1.203907e-002, 1.526911e-002, -1.815992e-002, 3.347232e-002, -1.278968e-002, 1.066953e-002, 2.920290e-003, -2.765346e-002, 8.508947e-003, -8.508947e-003, 2.765346e-002, -2.920290e-003, -1.066953e-002, 1.278968e-002, -3.347232e-002, 1.815992e-002, -1.526911e-002, 1.203907e-002, -9.288168e-003, 4.341091e-003, -7.346485e-002, 9.792004e-002, -2.058972e-001, 9.791473e-002, 4.042882e-002, -8.431184e-002, 8.808647e-003, 1.480667e-002, 2.247900e-002, -1.088043e-002, -2.378972e-002, -4.804275e-002, 1.382127e-002, -2.898138e-002, -5.309345e-002, 1.093724e-002, -1.114604e-002, -2.762856e-002, -4.913604e-002, 8.844995e-003, 8.369683e-002, -2.341644e-001, 1.243078e-001, -1.141705e-001, 7.367553e-002, 6.934997e-002, -8.262026e-002, -1.527776e-003, 1.219531e-001, -3.954293e-002, 2.705273e-002, -8.333355e-003, 1.500011e-002, -1.609408e-002, -4.426423e-003, 1.271896e-002, -1.004685e-002, -2.436580e-003, -3.251412e-002, 1.651049e-002, -5.626693e-002, 4.659432e-002, -1.138235e-002, -6.915838e-002, 8.619679e-002, 1.594866e-002, 6.600259e-002, -1.530069e-001, 8.222484e-002, 4.629727e-002, -2.304771e-002, -6.065624e-002, 8.152044e-002, -6.825387e-003, 5.073240e-002, -1.412300e-002, -1.924862e-002, -8.582082e-003, -6.203883e-003, 1.179581e-003, -4.225514e-002, -1.312773e-002, -3.062109e-002, 9.860649e-003, 7.896695e-003, 2.222442e-002, -2.161989e-004, 4.155328e-002, -6.871876e-002, -1.361497e-002, 1.886603e-002, -1.786848e-001, 1.697424e-002, 3.636755e-003, 1.350028e-002, -1.875912e-004, 2.557823e-002, -5.764391e-002, 3.448600e-003, -1.177639e-002, -1.085599e-002, -1.451760e-003, -3.082561e-003, 2.305816e-002, -3.373242e-002, -6.847931e-003, -2.833213e-003, -4.501309e-002, 7.271356e-002, 4.239452e-003, -7.173633e-002, 1.722737e-002, 1.305492e-001, -1.254656e-001, 1.441699e-001, -2.169288e-002, 1.078987e-002, 3.029759e-002, 6.318735e-003, -1.100332e-002, 4.505489e-003, -3.972945e-002, -1.850775e-002, -1.694768e-003, -1.865926e-002, 8.946850e-005, -2.510850e-003, 3.851933e-002, 3.978328e-002, -1.106776e-002, 4.259077e-002, -8.578516e-002, -5.049737e-002, 4.775596e-002, -7.997624e-002, -1.536039e-001, 1.106009e-001, -1.054161e-001, 1.127860e-003, 1.635696e-002, -7.048648e-002, 1.643486e-002, -4.042562e-003, -1.901437e-002, 2.820571e-002, 2.305706e-002, 5.977469e-003, 7.329633e-003, -1.231193e-002, -6.621019e-004, -5.190427e-002, -3.465622e-002, 5.923230e-002, -5.555370e-002, 6.972975e-002, 1.452797e-002, -6.316942e-002, 9.918131e-002, 4.242474e-003, -2.982307e-002, -9.653996e-003, 2.640217e-002, 9.269048e-003, 4.013920e-002, -2.545595e-002, 2.304927e-002, 1.027534e-002, -3.363446e-002, -7.164798e-003, -5.092299e-003, -1.036713e-002, 2.794038e-002, 1.938776e-002, 1.514173e-002, -8.144064e-003, -5.330086e-002, 2.838057e-002, -1.325870e-002, -2.491189e-002, -5.852203e-002, -8.222135e-003, 4.044342e-003, -5.376975e-002, 5.663729e-002, 9.570006e-003, -2.697696e-002, -4.890422e-002, 5.891944e-002, -1.807547e-002, -2.236056e-002, -6.369780e-003, -8.656136e-003, 5.786715e-003, -5.871786e-003, -1.738536e-002, 1.389313e-002, 4.588410e-003, -1.223418e-002, 5.195494e-002, -2.230078e-002, -2.178701e-002, -7.986086e-003, 4.154295e-002, -3.243232e-002, 1.409527e-002, 3.327557e-003, -5.252854e-003, -4.723757e-002, 7.178462e-003, 2.934874e-002, -2.202147e-003, -7.003273e-003, -1.915674e-002, -5.599576e-004, 6.338664e-003, -2.548590e-003, -6.632964e-003, 1.148499e-003, -2.221581e-003, -7.662612e-003, -6.387891e-003, 1.019837e-002, -4.265387e-003, -1.472237e-002, -2.891658e-002, -6.744588e-003, 1.747949e-003, 7.920950e-003, -2.473166e-002, 8.039676e-003, 7.673356e-003, -8.415713e-003, -5.587340e-003, -3.325127e-002, 3.470306e-003, 4.314154e-003, -1.716347e-002, -4.220900e-003, 3.835909e-004, -6.649134e-003, -3.625781e-003, -6.366420e-003, 4.836437e-003, 9.045710e-003, -1.833857e-002, 7.202214e-003, -1.359739e-002, 1.729742e-002, -1.612059e-002, 1.099245e-002, -7.237126e-002, 3.644457e-002, -1.115681e-003, -9.442655e-003, 2.159053e-003, -3.698705e-002, 2.846936e-002, -1.233611e-002, -1.729387e-002, -

© ISO/IEC 2004 — All rights reserved

Documents
Document Sharing Hub
Full document details: ISO_IEC 15938-3_2002_Amd 1_2004

1.844263e-004, 7.641534e-004, 2.992242e-003, 8.151562e-004, -1.163331e-002, 9.077525e-004, -1.076495e-002, -2.345603e-002, 3.511798e-002, -1.466616e-002, -2.895024e-003, 9.581943e-003, 6.752213e-003, 2.729247e-002, -7.182968e-003, 1.512571e-002, -1.848007e-003, -6.055588e-003, 1.604630e-002, -1.229472e-002, -8.063456e-003, 2.850125e-003, -8.248494e-003, -4.463131e-003, -2.306629e-003, 1.521327e-004, -1.297021e-003, 2.312777e-003, -1.870753e-003, -2.723043e-003, 2.679093e-003, -5.726965e-003, 1.020364e-003, 1.970474e-002, -8.004701e-003, 8.685576e-003, -1.301112e-002, -4.456471e-002, 2.207442e-002, -1.407255e-002, 3.914423e-002, -2.047561e-002, -1.390693e-002, -3.528530e-004, -7.340298e-003, -6.799857e-003, -2.588175e-003, 7.485346e-004, 2.678900e-003, 1.160236e-003, -4.335524e-003, 2.266002e-003, 6.297353e-003, -2.893166e-004, 1.431063e-002, 7.694376e-003, -1.006225e-002, 3.240271e-002, -2.872615e-002, 2.620437e-002},
{-1.589862e-002, 2.566615e-003, 1.563226e-002, -7.689339e-003, 1.729790e-002, -1.777318e-002, 1.817595e-002, -1.278611e-002, -6.006678e-003, 4.851795e-003, 3.995665e-003, -1.407415e-002, -1.407415e-002, 3.995665e-003, 4.851795e-003, -6.006678e-003, -1.278611e-002, 1.817595e-002, -1.777318e-002, 1.729790e-002, -7.689339e-003, 1.563226e-002, 2.566615e-003, 7.348930e-002, 1.732156e-002, 7.324283e-002, -2.853987e-002, 1.800656e-002, 8.733586e-002, -5.999978e-004, 1.780004e-002, 2.139962e-002, -1.678120e-002, -1.686304e-002, -5.875879e-003, -1.759745e-002, -2.836128e-002, -1.146045e-002, -1.878011e-003, -1.254062e-002, 4.579472e-002, 5.409999e-002, -3.280620e-002, 5.794952e-002, -7.275579e-002, 9.760359e-002, -2.135687e-001, -1.999020e-003, 1.499631e-001, -2.222819e-002, -2.921720e-002, 6.206023e-002, 9.948787e-003, 3.946125e-002, 1.398796e-002, -8.409423e-003, -2.404633e-002, -7.231502e-003, 8.957087e-003, -2.566394e-002, -7.924739e-003, 1.292178e-002, -1.048101e-002, -7.536446e-002, 5.381989e-002, -2.565210e-002, -1.276210e-002, 1.035538e-001, 5.439520e-002, 1.328984e-001, -4.519717e-002, -1.434568e-001, 8.205165e-002, 2.833313e-002, -7.800168e-002, 3.141969e-002, 4.078398e-002, 3.079965e-002, 1.127899e-002, 2.572089e-002, 1.613382e-002, 2.926775e-002, 1.213907e-002, -3.401554e-002, -1.506701e-004, 7.167670e-003, 4.009152e-002, 8.425411e-003, 6.731587e-002, -1.137081e-002, -3.664174e-002, -1.008870e-002, 2.091665e-001, -3.548726e-002, 2.083363e-002, -1.614849e-002, 3.095673e-003, 2.206877e-002, -4.750736e-003, 1.571617e-002, 5.169705e-003, 4.766557e-003, -2.797636e-002, -1.620618e-002, 1.406822e-002, 1.932828e-002, 8.205970e-003, 8.242155e-003, 5.652489e-003, -2.616958e-002, -9.823910e-003, -4.001050e-002, -3.428152e-002, 7.589596e-002, -1.491289e-001, -8.291569e-002, 6.282161e-002, 1.604767e-002, 6.778334e-002, -2.857372e-002, 2.879186e-002, 1.748400e-002, 2.186423e-003, 3.579286e-003, -8.839906e-003, -8.851522e-004, -8.069024e-003, 9.138257e-003, 8.237845e-003, 2.487457e-002, -7.240666e-003, 1.817037e-002, 2.026120e-002, -1.117982e-002, 4.941315e-002, 3.840988e-002, 2.037058e-002, 7.239467e-002, -1.171213e-001, 1.348846e-001, -7.993857e-002, -2.795562e-002, 4.535900e-002, -3.071867e-002, 7.697853e-003, -5.963352e-004, -7.333821e-004, -4.593885e-003, 8.349041e-004, -7.628332e-003, -2.235589e-003, 9.693736e-003, -1.161650e-002, 3.022007e-003, -5.282326e-003, 6.350087e-003, -1.812486e-002, 1.126685e-002, 5.914517e-002, -1.473516e-001, 1.560945e-001, 5.216957e-002, -6.903995e-002, 1.057132e-001, -6.481105e-002, -3.582190e-002, 1.159511e-002, -4.363718e-002, -2.286468e-003, -7.632965e-003, 1.451463e-002, -1.023801e-002, -1.662549e-002, 1.440887e-003, -2.521535e-003, 3.462420e-002, -2.307100e-003, 1.077639e-002, -1.781757e-002, 5.722683e-002, 1.497863e-002, -8.316851e-002, 1.353422e-001, -7.109946e-002, 6.047903e-002, -7.001790e-002, 8.425943e-003, 2.717205e-002, -7.835835e-004, -1.850239e-002, 1.739174e-002, -1.687251e-002, 1.916283e-002, -2.683150e-003, -1.373979e-002, -1.539467e-002, -8.843267e-003, -3.235917e-003, 3.761124e-004, 4.607422e-002, -3.236669e-002, 8.617686e-003, 3.957953e-003, 5.301367e-003, -4.361567e-003, 1.853758e-004, -3.427944e-002, 2.734959e-003, 1.410201e-002, -3.786583e-002, -1.971059e-003, 3.730321e-002, -1.378782e-002, -1.088454e-002, 2.719315e-002, -1.373386e-002, -1.626045e-002, -1.200038e-002, 6.953825e-003, 1.328160e-002, 6.293032e-003, -2.212156e-003, -2.381149e-002, 3.622436e-002, -2.260382e-002, -3.061823e-002, 4.370576e-002, 2.414787e-002, -4.722504e-002, 3.352980e-002, -6.945137e-002, 1.364748e-002, 3.959760e-002, -1.802355e-002, -2.992432e-002, -8.065628e-003, 9.728270e-003, 9.813401e-003, -1.637414e-002, -6.943708e-003, 6.327471e-003, -4.287700e-003, 9.365730e-004, 1.852937e-002, -3.975960e-003, -8.876053e-003, -2.028995e-002, 7.749443e-003, 8.320821e-003, -2.216619e-002, -3.338854e-003, 3.950083e-002, 4.237716e-002, 2.088454e-002, 8.115419e-003, -1.100723e-002, 5.506942e-003, -1.567265e-002, -3.748214e-003, 3.534667e-002, -1.026680e-002, -9.505487e-003, -7.190665e-003, -7.354279e-003, 7.302309e-004, 6.243549e-003, 5.545028e-004, -5.284945e-003, -1.489691e-002, -8.112041e-003, 1.418233e-002, 2.197190e-003, -3.937318e-003, 2.352412e-002, -6.312860e-003, 1.633849e-002, 2.146345e-002, 2.561592e-003, -5.643416e-003, 1.478259e-002, -9.592885e-003, -1.984499e-002, 9.676362e-003, 1.054013e-002, -9.252876e-003, -2.789246e-003, -1.586968e-003, -5.270449e-003, -6.389763e-003, 9.841123e-004, 4.174176e-003, -1.710220e-002, 1.737458e-003, 1.373888e-002, -3.995722e-003, 4.305086e-003, 1.268258e-002, 1.136574e-002, 5.422762e-003, -1.571034e-002, -7.737902e-003, 3.089236e-002, -9.936702e-003, -1.625056e-002, 8.545397e-003, 1.916910e-002, -1.403240e-002, -3.790800e-003, -1.756248e-003, -2.837671e-003, 5.797248e-004, -5.372769e-004, 3.490828e-003, 6.447153e-003, 2.580831e-003, -1.728139e-002, 1.587251e-002, 1.576584e-002, 2.648968e-003, -1.559276e-002,

© ISO/IEC 2004 – All rights reserved
Documents
Document Sharing Hub
Full document details: ISO_IEC 15938-3_2002_Amd 1_2004

4.762589e-002, -9.460078e-003, 3.122996e-017, -6.058018e-003, 1.761953e-002, -3.557268e-002, 3.518668e-002, -2.618362e-002, -1.738577e-007, 1.870748e-002, 3.082844e-003, -2.126684e-002, -1.378721e-002, 2.681865e-002, -2.681865e-002, 1.378721e-002, 2.126684e-002, -3.082844e-003, -1.870748e-002, 1.738577e-007, 2.618362e-002, -3.518668e-002, 3.557268e-002, -1.761953e-002, 6.058018e-003, -1.131747e-001, -5.419139e-002, -1.913354e-002, 4.427044e-002, 3.259978e-003, -3.348091e-002, 7.648276e-003, -1.980494e-002, -1.801993e-002, 1.559947e-002, 1.870013e-002, -3.433074e-003, -5.915387e-003, -1.696113e-002, -1.100130e-002, 6.423853e-003, -5.957004e-003, -2.259424e-002, -2.881406e-002, -4.732523e-003, 5.203455e-002, -8.760538e-002, 1.783966e-002, 1.045210e-001, -5.064973e-002, -6.204782e-002, 1.077431e-002, -1.873578e-002, -2.013606e-002, 1.270800e-002, -2.483372e-002, -1.218995e-002, -1.972969e-002, -1.018245e-002, -8.510713e-003, -2.112175e-002, -1.657904e-002, 3.631594e-003, 8.600493e-003, 6.692216e-003, 5.999127e-002, -4.964941e-002, 3.355086e-002, -3.145028e-002, 6.862426e-002, -8.965315e-002, 1.934934e-001, -1.301045e-001, 2.619667e-002, -4.744085e-002, -5.372831e-003, -3.705137e-002, -7.668914e-003, -3.459150e-003, -5.720434e-003, -6.762932e-003, 1.065304e-003, 1.236361e-002, -2.908814e-002, -4.981398e-002, -1.936508e-002, -1.855046e-002, -1.403427e-003, -3.637753e-002, -4.239449e-002, 4.782918e-002, -1.125096e-001, 1.173368e-001, -1.229202e-001, -5.196196e-003, 7.407514e-002, -5.070518e-002, 3.616566e-002, -2.875087e-002, 4.977728e-002, -3.458827e-002, -7.829830e-003, 1.540272e-002, -1.129564e-002, -2.268141e-002, -2.844418e-002, 2.482001e-002, 1.683531e-003, -2.693228e-002, -8.822211e-003, -1.047616e-002, -6.128386e-002, 5.136421e-002, -9.562744e-003, 5.849543e-002, -3.218271e-002, 6.436160e-002, -2.129014e-001, 9.848783e-002, -3.087675e-002, 3.401590e-002, 3.665461e-002, -7.726058e-002, 1.753687e-002, 9.060022e-003, 1.321395e-002, -2.616412e-002, -3.946437e-002, -8.775900e-003, 1.294874e-002, -3.393976e-003, 9.855141e-003, 7.759857e-003, -5.399914e-003, 8.261910e-002, -8.011523e-002, 8.314942e-003, 1.039952e-003, -1.220470e-001, 4.043461e-002, 1.080258e-001, 2.925171e-003, -1.212025e-002, 5.674824e-003, -2.017591e-002, 7.749995e-002, -1.875502e-002, 2.192892e-002, -3.092356e-002, -3.600381e-002, -4.300304e-003, 1.142799e-002, -2.076702e-002, -1.387304e-002, -1.784058e-002, -4.141538e-003, 2.578200e-002, -3.422399e-002, 6.005312e-002, -3.229579e-002, 1.022131e-002, 7.634970e-002, -1.336256e-001, 8.836799e-002, -5.425437e-002, 5.125870e-002, -2.999926e-002, -3.748990e-002, -1.184716e-002, -1.514171e-002, -3.030769e-002, -1.203301e-003, 7.982756e-003, -4.074173e-003, -1.222956e-003, 8.892094e-003, -2.307604e-002, -1.349083e-002, -1.123224e-008, -3.016561e-002, 6.465707e-003, -1.300070e-002, 3.715862e-004, -8.801545e-003, 6.357006e-002, -5.485135e-002, 1.581538e-002, 6.061240e-002, -7.833701e-002, -6.885628e-003, 3.732997e-003, -3.936584e-002, -2.138956e-003, 8.292876e-005, 1.491412e-002, -1.013393e-002, -1.831818e-002, -7.309910e-003, 2.208667e-003, -6.300380e-004, -3.011135e-002, 8.960736e-004, 3.055828e-002, -1.818855e-002, -1.183803e-002, 4.267053e-002, 1.341395e-002, -7.552060e-002, 2.402987e-002, -6.035856e-002, 3.791510e-002, -9.273777e-003, -9.280476e-003, 4.327232e-004, 2.439885e-003, -1.698608e-002, 6.801225e-003, -5.376562e-003, -1.355752e-002, -5.967399e-003, 1.744430e-004, 3.404394e-003, -2.002289e-003, 2.711105e-003, 2.277541e-003, -6.185114e-003, 1.852641e-002, -2.728922e-003, 8.047523e-003, 6.151989e-003, -2.108978e-002, 2.095399e-002, -3.332248e-002, 1.027867e-002, -1.382721e-002, -2.447274e-002, -1.314612e-002, 1.068095e-002, 2.339284e-003, -1.383619e-002, -1.294209e-002, -1.223259e-003, 1.192608e-003, 1.706328e-002, -1.603408e-003, 9.913624e-003, 1.247449e-002, -3.386892e-003, -1.450679e-002, -1.197336e-002, 3.777440e-003, 1.004723e-002, -1.481699e-002, -1.640388e-002, 1.664689e-002, 5.752945e-002, 1.218414e-003, -6.364294e-002, 2.289168e-002, -1.295726e-002, 1.067183e-002, -1.054836e-002, -2.063499e-003, -1.283996e-002, -1.182561e-002, 1.732807e-003, 2.081128e-003, 2.650167e-003, 1.059949e-002, -1.700744e-004, 1.836878e-003, -2.267492e-003, -3.257733e-002, -1.128083e-003, 2.988695e-003, 3.730167e-002, -5.640440e-002, -7.982764e-003, -2.121310e-002, 5.097855e-003, 9.087933e-003, -2.045448e-002, -1.484383e-002, 1.674186e-003, 8.594572e-003, -1.447609e-002, -9.540093e-003, -2.472962e-003, 1.086871e-003, -1.411360e-003, -1.198433e-004, -7.454232e-003, 4.453634e-003, 1.074100e-003, -2.384383e-002, -3.086590e-003, 3.988187e-003, -2.132329e-002, -9.713095e-003, 1.014703e-002, 1.147817e-002, 2.502615e-002, -1.429474e-002, 7.874185e-003, -4.467659e-002, 8.031620e-004, 3.148792e-002, -1.449661e-002, -8.700660e-003, -1.165093e-004, -4.186004e-003, -6.641538e-003, 8.510436e-004, -1.637545e-004, -2.979902e-003, -3.218859e-003, -2.326202e-003, -1.429458e-003, -2.421023e-002, 1.285758e-002, 2.039511e-002, -2.441336e-002, 3.470247e-003, -2.764208e-003},

{2.535841e-002, -5.341557e-003, 5.303889e-002, -7.391457e-002, 6.423550e-002, -1.427393e-002, -4.621362e-002, 4.783438e-002, -3.269131e-003, 3.500157e-003, -1.518018e-002, 6.032845e-003, 6.032845e-003, -1.518018e-002, 3.500157e-003, -3.269131e-003, 4.783438e-002, -4.621362e-002, -1.427393e-002, 6.423550e-002, -7.391457e-002, 5.303889e-002, -5.341557e-003, -5.778015e-002, 6.378225e-002, -6.028083e-002, 1.190281e-001, -1.072322e-001, 2.417226e-002, 3.988986e-002, -6.062778e-002, -1.471475e-002, -4.575131e-003, -8.460649e-003, 2.500619e-003, -2.778156e-003, 4.677896e-003, 1.840706e-002, 4.847277e-002, 3.696355e-003, 1.778399e-002, -5.296214e-002, 1.020277e-001, -1.574576e-001, 1.441384e-001, -3.347082e-002, 1.024585e-001, -4.579719e-002, -8.379172e-002, 1.268445e-001, -5.899491e-002, 1.905363e-002, 5.032999e-003, -7.281084e-003, 2.265981e-003, -1.750164e-002,

© ISO/IEC 2004 — All rights reserved

Documents
Document Sharing Hub

Full document details: ISO_IEC 15938-3_2002_Amd 1_2004

3.465572e-003, -1.864337e-002, 4.374822e-002, 1.955680e-002, -4.782133e-003, -3.507288e-002, 4.294856e-002, 2.431432e-002, -5.337774e-002, 1.527261e-002, -5.899422e-002, 1.219207e-001, -1.060581e-001, 9.175355e-002, 1.696297e-002, -6.649085e-002, 2.669914e-002, -3.309160e-002, 2.012033e-002, -5.553573e-004, 1.174268e-003, -9.627043e-003, 7.565027e-003, -1.328874e-002, 3.221698e-003, -2.407725e-002, -1.137289e-002, -2.776389e-002, -3.434946e-003, -9.929524e-003, 3.130265e-002, -1.503458e-002, -2.951227e-002, 1.442639e-001, -1.731143e-001, 1.587401e-002, -1.282073e-001, 7.296189e-002, -1.152106e-002, -3.463573e-002, -4.744007e-003, 4.437854e-002, 6.767290e-003, 1.369232e-002, 4.173542e-002, 2.333934e-002, 1.169678e-002, -2.133605e-002, -1.212364e-002, -3.756815e-002, 9.712282e-003, 2.006425e-002, -1.161365e-002, 1.351944e-002, 2.289243e-002, -9.764947e-002, 4.883169e-002, 6.538560e-003, 1.245933e-001, 8.743184e-002, -4.984719e-002, 6.437558e-002, -2.263922e-002, 2.959869e-002, -2.771250e-002, -2.913628e-002, 2.859046e-002, 4.149135e-003, -1.402278e-003, -1.178301e-002, 9.979759e-003, -6.907342e-003, -1.778779e-002, -3.561644e-002, 2.641267e-002, 2.997121e-002, -4.849006e-002, -3.307834e-002, 4.311978e-002, -6.664749e-002, 7.087255e-002, -1.279817e-001, -3.976216e-002, 6.643787e-002, -6.558293e-002, 4.274532e-002, -1.712003e-002, -4.650212e-002, 1.069760e-002, -1.693808e-002, -1.944514e-002, 3.199348e-003, 8.012165e-003, 1.079608e-002, 9.399036e-003, 2.614855e-004, -2.443436e-002, -2.238638e-002, 3.149432e-002, 3.252467e-002, -4.270101e-003, -1.614634e-003, 4.661336e-002, -9.563373e-002, 7.339391e-002, 1.767036e-002, -7.297667e-002, 9.068177e-002, -6.765091e-002, -2.467872e-002, -8.010464e-003, -2.408791e-002, -1.208461e-002, -2.080378e-003, 1.338352e-002, 3.739665e-003, -6.677254e-003, 5.277959e-003, 2.634543e-002, -5.807207e-003, -1.888302e-002, -2.076624e-002, -1.191315e-002, -2.720225e-002, -2.500366e-002, -4.758325e-003, 3.432013e-002, 1.324742e-002, -8.591591e-003, -1.075089e-002, -3.449965e-002, 2.004304e-002, -2.187927e-002, -4.182241e-003, 3.605957e-003, -3.529896e-002, 6.823066e-003, -6.647495e-004, -7.432809e-003, -6.331734e-003, -2.049611e-002, 3.812051e-003, 1.791274e-002, -3.230921e-003, 5.710910e-003, 3.304141e-002, -1.940321e-002, 2.099953e-003, 2.882580e-002, -1.658342e-002, -1.703999e-002, -2.178033e-002, 7.554037e-003, 3.292734e-003, -2.055630e-002, 2.757218e-002, -6.268951e-003, -2.162378e-002, -4.739757e-003, 1.228084e-003, 7.262831e-003, -5.523083e-003, -7.999520e-003, -3.421183e-004, -1.151939e-002, -1.441708e-002, -9.234277e-004, 1.016023e-002, 6.019981e-003, 1.215690e-002, -1.015009e-002, 2.661160e-003, 8.168302e-003, 6.623317e-003, -2.506148e-003, -4.256284e-002, 4.200192e-002, -6.120307e-003, -3.143803e-002, 2.956411e-002, -6.211378e-003, -3.009508e-003, 5.699954e-003, -7.311805e-003, -4.401119e-003, 7.846213e-003, 2.079595e-003, -1.141180e-002, -1.554829e-002, -1.054408e-002, -7.641147e-004, 1.275592e-002, 1.902327e-002, -2.223691e-002, 1.036599e-002, 3.665258e-002, -2.294727e-002, -1.452215e-002, -2.920333e-003, -3.745237e-002, -1.229946e-003, -1.715170e-003, 2.206029e-002, 6.079777e-003, -5.808944e-003, -8.198074e-003, -5.414092e-003, -3.392356e-003, 4.139936e-003, 2.240543e-003, -3.270222e-003, -5.466042e-003, -3.687533e-003, -4.544093e-003, 4.650764e-004, -1.183511e-002, 1.368395e-002, 2.004777e-002, -9.492861e-003, 6.253194e-003, -4.908691e-002, 2.470713e-002, 7.835980e-003, -3.247487e-002, 1.382447e-002, -1.616172e-002, 3.162747e-003, 8.354878e-003, -1.025247e-002, -1.102591e-002, -2.261353e-003, 1.899466e-003, 4.267098e-003, 3.209908e-003, -4.584861e-003, -3.096336e-003, 4.559210e-004, 6.747555e-003, -4.356044e-003, 1.156580e-002, -1.417840e-002, 5.672466e-003, 1.870504e-002, 1.037086e-002, -3.579314e-002, 3.235915e-002, -1.852391e-002, -2.742541e-002, 3.328504e-002, 8.584666e-003, -2.367690e-003, -2.546780e-003, -5.275364e-003, -3.204752e-003, -1.787821e-003, -3.040646e-003, 3.100377e-003, -2.873239e-004, -5.391662e-003, -8.805749e-003, -9.160454e-004, 2.288366e-002, -1.340314e-002, 1.777122e-002, 8.731812e-003, -2.557429e-002, 4.101809e-018, 1.127684e-002, -3.897322e-002, 6.222498e-002, -4.362947e-002, 3.086839e-003, 3.438972e-002, -1.331892e-002, 6.943910e-003, 2.252756e-002, 1.089821e-002, -2.449718e-003, 2.449718e-003, -1.089821e-002, -2.252756e-002, -6.943910e-003, 1.331892e-002, -3.438972e-002, -3.086839e-003, 4.362947e-002, -6.222498e-002, 3.897322e-002, -1.127684e-002, -2.078773e-001, 1.763820e-001, -1.251254e-001, 5.091562e-002, 2.200023e-002, -3.404996e-002, 4.217912e-002, -3.674117e-002, 1.081089e-002, -7.705966e-003, -7.355593e-003, -3.070983e-004, -3.201787e-002, -1.460451e-002, 6.578154e-003, 1.671928e-003, -3.527799e-002, 8.442806e-002, -6.471055e-002, 4.783539e-002, -1.725181e-002, 2.982796e-002, 7.598307e-002, 2.242611e-001, -1.643382e-001, 4.729000e-002, 4.652218e-002, -1.191800e-001, 9.134983e-002, -6.756322e-002, 2.704558e-002, -1.959221e-002, -1.589045e-002, -2.382957e-002, 6.205547e-003, 3.260781e-003, 5.118042e-003, 9.946648e-003, -9.284757e-003, 5.224999e-002, -6.080901e-002, 5.934891e-002, -6.785404e-002, 1.441989e-001, -1.265595e-001, -3.542144e-002, -8.875446e-002, 1.018703e-002, 5.599416e-002, -9.838678e-002, 3.022914e-002, -1.020531e-002, 2.647358e-002, -4.859524e-002, 1.593735e-003, -1.566741e-002, 1.544542e-003, 7.869336e-003, 1.137253e-002, 2.790208e-002, 2.157966e-002, -1.479797e-003, -7.957806e-002, 3.370333e-002, 4.347493e-002, -1.042911e-001, 3.562771e-002, 1.227711e-002, -8.117346e-003, 4.091905e-002, -3.405807e-002, 7.805200e-003, 3.473085e-003, 6.998769e-002, -2.425329e-002, 3.373992e-002, 7.386253e-002, 1.780044e-002, 2.150076e-002, 1.418711e-002, -6.900855e-003, 3.300905e-003, -3.804026e-002, -1.894672e-002, -2.629413e-003, 7.246265e-003, -8.576834e-003, -3.946757e-002, 3.582335e-002, 1.229291e-003, 1.249078e-002, -1.739535e-002, -1.601126e-002, 3.358403e-003, -2.932146e-002,

© ISO/IEC 2004 – All rights reserved
Documents
Document Sharing Hub
Full document details: ISO_IEC 15938-3_2002_Amd 1_2004