INTERNATIONAL STANDARD

# ISO/IEC 21000-5

First edition
2004-04-01

**AMENDMENT 2**
2007-09-15

# Information technology — Multimedia framework (MPEG-21) —

## Part 5: Rights Expression Language

## AMENDMENT 2: DAC (Dissemination And Capture) profile

*Technologies de l'information — Cadre multimédia (MPEG-21) —*

*Partie 5: Langage d'expression des droits*

*AMENDEMENT 2: Profil DAC («Dissemination And Capture»)*

Reference number
ISO/IEC 21000-5:2004/Amd.2:2007(E)

© ISO/IEC 2007

Full document details: ISO_IEC 21000-5_2004_Amd 2_2007

**PDF disclaimer**

This PDF file may contain embedded typefaces. In accordance with Adobe's licensing policy, this file may be printed or viewed but shall not be edited unless the typefaces which are embedded are licensed to and installed on the computer performing the editing. In downloading this file, parties accept therein the responsibility of not infringing Adobe's licensing policy. The ISO Central Secretariat accepts no liability in this area.

Adobe is a trademark of Adobe Systems Incorporated.

Details of the software products used to create this PDF file can be found in the General Info relative to the file; the PDF-creation parameters were optimized for printing. Every care has been taken to ensure that the file is suitable for use by ISO member bodies. In the unlikely event that a problem relating to it is found, please inform the Central Secretariat at the address given below.

**COPYRIGHT PROTECTED DOCUMENT**

© ISO/IEC 2007

All rights reserved. Unless otherwise specified, no part of this publication may be reproduced or utilized in any form or by any means, electronic or mechanical, including photocopying and microfilm, without permission in writing from either ISO at the address below or ISO's member body in the country of the requester.

ISO copyright office
Case postale 56 • CH-1211 Geneva 20
Tel. + 41 22 749 01 11
Fax + 41 22 749 09 47
E-mail copyright@iso.org
Web www.iso.org

Published in Switzerland



© ISO/IEC 2007 – All rights reserved

Documents
Document Sharing Hub

Full document details: ISO_IEC 21000-5_2004_Amd 2_2007

# Foreword

ISO (the International Organization for Standardization) and IEC (the International Electrotechnical Commission) form the specialized system for worldwide standardization. National bodies that are members of ISO or IEC participate in the development of International Standards through technical committees established by the respective organization to deal with particular fields of technical activity. ISO and IEC technical committees collaborate in fields of mutual interest. Other international organizations, governmental and non-governmental, in liaison with ISO and IEC, also take part in the work. In the field of information technology, ISO and IEC have established a joint technical committee, ISO/IEC JTC 1.

International Standards are drafted in accordance with the rules given in the ISO/IEC Directives, Part 2.

The main task of the joint technical committee is to prepare International Standards. Draft International Standards adopted by the joint technical committee are circulated to national bodies for voting. Publication as an International Standard requires approval by at least 75 % of the national bodies casting a vote.

Attention is drawn to the possibility that some of the elements of this document may be the subject of patent rights. ISO and IEC shall not be held responsible for identifying any or all such patent rights.

Amendment 2 to ISO/IEC 21000-5:2004 was prepared by Joint Technical Committee ISO/IEC JTC 1, *Information technology*, Subcommittee SC 29, *Coding of audio, picture, multimedia and hypermedia information*.

© ISO/IEC 2007 — All rights reserved


Documents
Document Sharing Hub
Full document details: ISO_IEC 21000-5_2004_Amd 2_2007

Documents
Document Sharing Hub

Full document details: ISO_IEC 21000-5_2004_Amd 2_2007

# Information technology — Multimedia framework (MPEG-21) —

## Part 5:
## Rights Expression Language

## AMENDMENT 2: DAC (Dissemination And Capture) profile

*Insert a new subclause 10.3 as follows:*

### 10.3 Multimedia Extension Two

#### 10.3.1 General

This subclause specifies an extension, called the “multimedia extension two”, of the REL specified in the previous clauses.

#### 10.3.2 Normative Namespace

The XML namespace for the extension types and new elements and attributes introduced in the m2x extension shall be `urn:mpeg:mpeg21:2006:01-REL-M2X-NS`, and this namespace is normative. Here, the `01` represents a serial number that is expected to change as this extension evolves.

#### 10.3.3 Namespace Prefixes

For convenience, this extension uses shorthand namespace prefixes when referring to XML elements and types. The actual prefix used is not important as long as the namespace URI is correct. The prefixes used in this extension are given in Table AMD2-1.

**Table AMD2-1 — Prefixes of XML Schemas**

| Prefix | Name | Namespace |
|---|---|---|
| r | REL Core | urn:mpeg:mpeg21:2003:01-REL-R-NS |
| sx | REL Standard Extension | urn:mpeg:mpeg21:2003:01-REL-SX-NS |
| mx | REL Multimedia Extension | urn:mpeg:mpeg21:2003:01-REL-MX-NS |
| dsig | XML digital signature core | http://www.w3.org/2000/09/xmldsig# |
| xenc | XML encryption core | http://www.w3.org/2001/04/xmlenc# |
| m1x | REL Multimedia Extension one | urn:mpeg:mpeg21:2005:01-REL-M1X-NS |
| m2x | REL Multimedia Extension two | urn:mpeg:mpeg21:2006:01-REL-M2X-NS |

© ISO/IEC 2007 — All rights reserved


Documents
Document Sharing Hub
Full document details: ISO_IEC 21000-5_2004_Amd 2_2007

### 10.3.4 Definition of Multimedia Extension Two

This subclause defines the extensions to the REL used in this profile. The syntax and the semantics of these extensions are presented here. The XML schema for the extension elements and types is listed in L.2.

#### 10.3.4.1 Right Extension Elements

##### 10.3.4.1.1 Export

###### 10.3.4.1.1.1 Informative Description

This element represents the right to export the associated broadcast program to another rendering or storage device. With a `m2x:Export`, a broadcast program is allowed to be transferred to another device with clear resource. If the resource has been encrypted when `m2x:export` is exercised, the resource should be decrypted first before exercising the right. When it presents in an `r:grant` element, this element allows adding the constraints in the `m1x:outputRegulation` element to confine the cleared output signal.

**Figure AMD2-1 —** `m2x:Export` **Right**

The example below shows how to grant the `'m2x:export'` right to export a broadcast program. The broadcast program can be exported to other devices in any kind of format and quality since there is no `m1x:OutputRegulation` condition.

```
<r:grant>
    <m1x:identityHolder>
        <m1x:idSystem>urn:mpeg:mpeg21:2006-01-REL-DAC-NS:DM-00001000</m1x:idSystem>
        <m1x:idValue>DO1234567</m1x:idValue>
    </m1x:identityHolder>
    <m2x:export/>
    <r:digitalResource>
        <r:nonSecureIndirect URI="urn:broadcast:news:2005_07_10-12H-00M"/>
    </r:digitalResource>
</r:grant>
```

###### 10.3.4.1.1.2 Normative Specification

Let $r$ be a `m2x:Export`. Then $r$ performs the act of releasing a resource in the current repository from explicit protection and(or) management by current DRM system to another controlled system such as CPS or an untrusted space. With a `m2x:Export`, a resource will be transferred to other system in the form of an output signal without protection.

If $r$ is used as the Right Member of an authorization request, then both the resource Member of that authorization request shall be present and shall identify the destination and, letting $\Sigma$ be the Authorization Context Member of that authorization request, $\Sigma$.`m2x:destinationPrincipal` shall identify the remote domain or device to which will be transferred the resource.


© ISO/IEC 2007 — All rights reserved
Documents
Document Sharing Hub
Full document details: ISO_IEC 21000-5_2004_Amd 2_2007

### 10.3.4.1.2 ExtendRights

#### 10.3.4.1.2.1 Informative Description

This element represents the right to extend the rights which are originally transmitted.

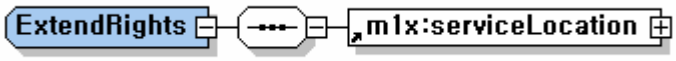


**Figure AMD2-2 —** `m2x:ExtendRights` **Right**

When present in an `r:grant` element, this element allows to get additional rights from the specified service location if current license does not have proper rights for user request.

The child element `m1x:ServiceLocation` includes identified source for additional rights.

The following example shows that recipient whose device identifier is DE1234567 can extend more rights than `'mx:play'` through '`http://www.foo.org/extendLiceseService`' dynamically.

```
<r:license>
    <r:grant>
        <m1x:identityHolder licensePartId="deviceID">
            <m1x:idSystem>urn:mpeg:mpeg21:2006-01-REL-DAC-NS:DM-00001000</m1x:idSystem>
            <m1x:idValue>DE1234567</m1x:idValue>
        </m1x:identityHolder>
        <mx:play/>
        <r:digitalResource licensePartId="news">
            <r:nonSecureIndirect URI="urn:broadcast:news:2005_07_10-12H-00M"/>
        </r:digitalResource>
    </r:grant>
    <r:grant>
        <m1x:identityHolder licensePartIdRef="deviceID"/>
        <m2x:extendRights>
            <m1x:serviceLocation>
                <m1x:url>http://www.foo.org/extendLiceseService</m1x:url>
            </m1x:serviceLocation>
        </m2x:extendRights>
        <r:digitalResource licensePartIdRef="news"/>
    </r:grant>
</r:license>
```

#### 10.3.4.1.2.2 Normative Specification

Let $r$ be a `m2x:ExtendRights`. Then $r$ performs the act of connecting the service location identified by `m1x:ServiceLocation` and receiving additional rights to a resource in the current repository when current license does not have proper rights for user request.

Let $d$ be a `m1x:ServiceLocation`. The endpoint of the service is given by the value of $d$/`m1x:url`.

© ISO/IEC 2007 — All rights reserved

Documents
Document Sharing Hub
Full document details: ISO_IEC 21000-5_2004_Amd 2_2007

### 10.3.4.2 Condition Extension Elements

#### 10.3.4.2.1 DestinationCondition

##### 10.3.4.2.1.1 Informative Description

This condition is used to confine the destination entities on the exercise of transfer-oriented rights, such as `m1x:GovernedMove`, `m1x:GovernedCopy` or `m2x:Export`.

This condition element is used when the destination entity is required to have specific condition such as security level, physical proximity or specific territory etc.

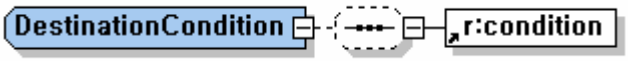


**Figure AMD2-3 —** `m2x:DestinationCondition` **Condition**

This condition is satisfied only if all conditions specified by the list of `m2x:DestinaionCondition` is true.

Following example shows that a resource is allowed to export only if the destination entity has at least security level 5 in the security system 1 and its location is within Seoul, Korea.

```
<r:grant>
    <m1x:identityHolder>
        <m1x:idSystem>urn:mpeg:mpeg21:2006-01-REL-DAC-NS:DM-00001000</m1x:idSystem>
        <m1x:idValue>DO1234567</m1x:idValue>
    </m1x:identityHolder>
    <m2x:export/>
    <r:digitalResource>
        <r:nonSecureIndirect URI="urn:broadcast:news:2005_07_10-12H-00M"/>
    </r:digitalResource>
    <m2x:destinationCondition>
        <r:allConditions>
            <m2x:securitySystem>
                <m2x:identifier>urn:mpeg:mpeg21:security:system1</m2x:identifier>
                <m2x:level>5</m2x:level>
            </m2x:securitySystem>
            <sx:territory>
                <sx:location>
                    <sx:country>KR</sx:country>
                    <sx:region>SEOUL</sx:region>
                </sx:location>
            </sx:territory>
        </r:allConditions>
    </m2x:destinationCondition>
</r:grant>
```

##### 10.3.4.2.1.2 Normative Specification

Let $c$ be a `m2x:DestinationCondition`. Let ($p$, $r$, $t$, $v$, $\Sigma$, $L$, $R$) be an authorization request on the destination entity (or entities). Let ($g$, $h$, $e$) be an authorization story. Then $c$ is satisfied with respect to ($p$, $r$, $t$, $v$, $\Sigma$, $L$, $R$) and ($g$, $h$, $e$) if and only if, for every integer $i$ from 1 to $\Sigma$.`m2x:cNum`(), $\Sigma$.`c/r:condition`(`i`) is true.


© ISO/IEC 2007 — All rights reserved
Documents
Document Sharing Hub
Full document details: ISO_IEC 21000-5_2004_Amd 2_2007

### 10.3.4.2.2 DestinationPrincipal

#### 10.3.4.2.2.1 Informative Description

This condition is used to specify principal on the destination entity of transfer-oriented rights, such as `m1x:GovernedMove`, `m1x:GovernedCopy` and `m2x:Export`.

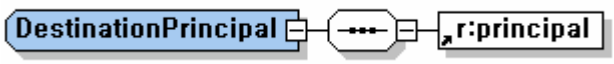


**Figure AMD2-4 —** `m2x:DestinationPrincipal` **Condition**

This condition is satisfied only if the entity specified by `m2x:DestinaionPrincipal` is authenticated as the destination entity.

In the following example, the right to export a resource can be exercised only if the destination device belongs to the same domain.

```
<r:grant>
    <m1x:identityHolder licensePartId="domainID">
        <m1x:idSystem>urn:mpeg:mpeg21:2006-01-REL-DAC-NS:DM-00001000</m1x:idSystem>
        <m1x:idValue>DO1234567</m1x:idValue>
    </m1x:identityHolder>
    <m2x:export/>
    <r:digitalResource>
        <r:nonSecureIndirect URI="urn:broadcast:news:2005_07_10-12H-00M"/>
    </r:digitalResource>
    <m2x:destinationPrincipal>
        <m1x:identityHolder licensePartIdRef="domainID">
    </m2x:destinationPrincipal>
</r:grant>
```

#### 10.3.4.2.2.2 Normative Specification

Let $c$ be a `m2x:DestinationPrincipal`. Let $(p, r, t, v, \Sigma, L, R)$ be an authorization request on the destination entity. Let $(g, h, e)$ be an authorization story. Then $c$ is satisfied with respect to $(p, r, t, v, \Sigma, L, R)$ and $(g, h, e)$ if and only if there exists a `c/r:principal` such that `r:principal` is Equal to $\Sigma$.`r:principal`().

### 10.3.4.2.3 Proximity

#### 10.3.4.2.3.1 Informative Description

This condition is used to confine the destination entities in `m2x:DestinationCondition` element on the exercise of transfer-oriented rights, such as `m1x:GovernedMove`, `m1x:GovernedCopy` or `m2x:Export`.

This condition element is used when the destination entity is required to have physical proximity to source entity.

This condition is satisfied only if the destination entity has physical proximity with the source domain specified at `r:grant/r:recipient` element.

© ISO/IEC 2007 — All rights reserved

Documents
Document Sharing Hub
Full document details: ISO_IEC 21000-5_2004_Amd 2_2007

**Figure AMD2-5 —** `m2x:Proximity` **Condition**

Following example shows that a resource is allowed to export only if the destination entity has physical proximity with the domain specified by DO1234567.

```
<r:grant>
    <m1x:identityHolder>
        <m1x:idSystem>urn:mpeg:mpeg21:2006-01-REL-DAC-NS:DM-00001000</m1x:idSystem>
        <m1x:idValue>DO1234567</m1x:idValue>
    </m1x:identityHolder>
    <m2x:export/>
    <r:digitalResource>
        <r:nonSecureIndirect URI="urn:broadcast:news:2005_07_10-12H-00M"/>
    </r:digitalResource>
    <m2x:destinationCondition>
        <m2x:proximity/>
    </m2x:destinationCondition>
</r:grant>
```

NOTE There is no normative standard to determine the Proximity between source entity and destination entity. However according to MPAA memo[8], at a minimum, local proximity detection requires:(i) setting the Internet Protocol (IP) packet header parameter Time to Live (TTL) to 3 in all transmitted IP packets of output content from a source device; (ii) confirmation that any Internet Protocol (IP) packets of the content received by a destination device have an IP Time to Live (TTL) parameter value of no greater than 3; and (iii) confirmation by the source device for any transmission of content (including over point-to-point wired connections) that one secure, valid measurement of a Round Trip Time (RTT) of 7 milliseconds or less has been made between itself and the destination device prior to completing the destination device's authentication request. Time to Live (TTL) is defined in Internet Standard RFC 791 STD 5. So the standard of `m2x:Proximity` follows the MPAA's recommendation.

#### 10.3.4.2.3.2 Normative Specification

Let $c$ be a `m2x:Proximity`. Let $(p, r, t, v, \Sigma, L, R)$ be an authorization request. Let $(g, h, e)$ be an authorization story. Then $c$ is satisfied with respect to $(p, r, t, v, \Sigma, L, R)$ and $(g, h, e)$ if and only if $\Sigma.$ `c/m2x:pM(`$p$`)` is true.

### 10.3.4.2.4 Scrambling

#### 10.3.4.2.4.1 Informative Description

This condition is used to confine the rights, '`m1x:GovernedCopy`' and '`m1x:GovernedMove`' to copy or move the associated resource to the device or system on which a scrambling algorithm should be applied to the resource before it is stored.

The optional attribute @`cipherType` of type QName indicates the name of a scrambling algorithm.

When the attribute is not specified, it means that it does not care about the kind of scrambling algorithm.

This condition is satisfied only if the target entity has a scrambling function with the algorithm specified at attribute @`cipherType`.


© ISO/IEC 2007 — All rights reserved
Documents
Document Sharing Hub
Full document details: ISO_IEC 21000-5_2004_Amd 2_2007

**Figure AMD2-6 —** `m2x:Scrambling` **Condition**

```
<r:grant>
    <m1x:identityHolder>
        <m1x:idSystem>urn:mpeg:mpeg21:2006-01-REL-DAC-NS:DM-00001000</m1x:idSystem>
        <m1x:idValue>DE1234567</m1x:idValue>
    </m1x:identityHolder>
    <m1x:governedCopy />
    <r:digitalResource>
        <r:nonSecureIndirect URI="urn:broadcast:news:2005_07_10-12H-00M"/>
    </r:digitalResource>
    <m2x:scrambling cipherType="m2x:AES"/>
</r:grant>
```

In the above example, the `m1x:GovernedCopy` is granted the right to copy the resource specified in `r:DigitalResource` only if device1234567 has a scrambling function supporting AES algorithm.

#### 10.3.4.2.4.2 Normative Specification

Let $c$ be a `m2x:Scrambling`. Let $(p, r, t, v, \Sigma, L, R)$ be an authorization request. Let $(g, h, e)$ be an authorization story. Then $c$ is satisfied with respect to $(p, r, t, v, \Sigma, L, R)$ and $(g, h, e)$ if and only if at least one of the following is true:

- if `c/@cipherType` is present then, $\Sigma$. `m2x:sB(c/@cipherType)` is true, or
- if `c/@cipherType` is present then $\Sigma$. `m2x:sB()` is true.

### 10.3.4.2.5 SecuritySystem

#### 10.3.4.2.5.1 Informative Description

This condition element is used to specify a security system to handle the resource.

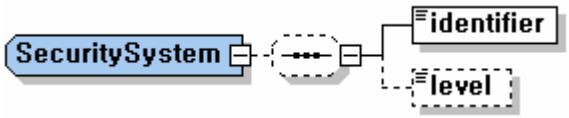


**Figure AMD2-7 —** `m2x:SecuritySystem` **Condition**

This condition is satisfied only if the DRM system to handle the resource is the same one which is specified by `m2x:identifier`, the child element of `m2x:SecuritySystem`, and if `m2x:level` is specified, it is equal to or less than the security level of target device on the specified DRM system. Target device can be current device or destination device according to specification position.

In the following example, the right to copy a resource can be exercised only if current device is controlled by the security system 1 and the security level on the system has at least class 3 or higher.

© ISO/IEC 2007 — All rights reserved

Documents
Document Sharing Hub
Full document details: ISO_IEC 21000-5_2004_Amd 2_2007

```
<r:grant>
    <m1x:identityHolder>
        <m1x:idSystem>urn:mpeg:mpeg21:2006-01-REL-DAC-NS:DM-00001000</m1x:idSystem>
        <m1x:idValue>DO1234567</m1x:idValue>
    </m1x:identityHolder>
    <m1x:governedCopy />
    <r:digitalResource>
        <r:nonSecureIndirect URI="urn:broadcast:news:2005_07_10-12H-00M"/>
    </r:digitalResource>
    <m2x:securitySystem>
        <m2x:identifier>urn:mpeg:mpeg21:security:system1</m2x:identifier>
        <m2x:level>3</m2x:level>
    </m2x:securitySystem>
</r:grant>
```

#### 10.3.4.2.5.2 Normative Specification

Let $c$ be a `m2x:SecuritySystem`. Let $(p, r, t, v, \Sigma, L, R)$ be an authorization request. Let $(g, h, e)$ be an authorization story. Then $c$ is satisfied with respect to $(p, r, t, v, \Sigma, L, R)$ and $(g, h, e)$ if and only if `c/m2x:identifier` is Equal to $\Sigma$.`m2x:securitySystem`() and `c/m2x:level` is Equal to or less than $\Sigma$.`m2x:securitySystemLevel`().

### 10.3.4.2.6 noSkipConstraint

#### 10.3.4.2.6.1 Informative Description

This condition element is used to specify time and object constraints for skipping in a resource.

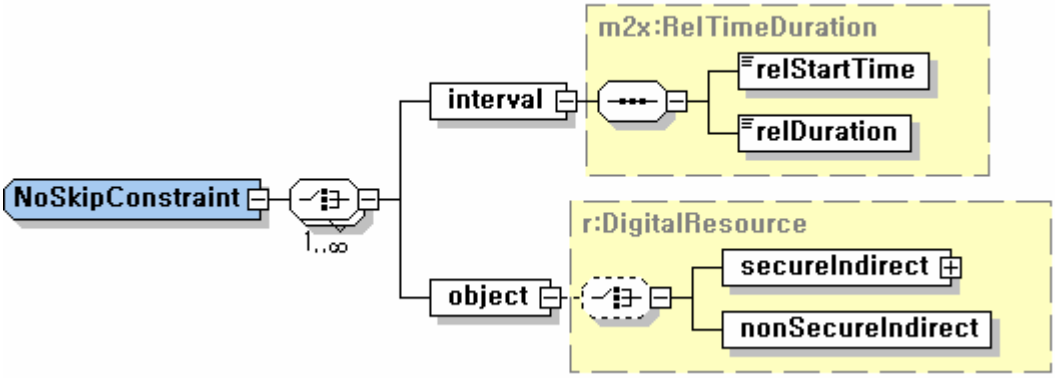


**Figure AMD2-8 —** `m2x:NoSkipConstraint` **Condition**

When present in an `r:grant` element, this element allows to skip parts of the resource only if constraint intervals or objects are processed (played or stored). For instance, let a resource have 5 min ads in front of the resource and the ads parts are referred in this element, then user can store the resource after the ads parts are stored.

The `m2x:NoSkipConstraint` element can have more than one `m2x:object` and `m2x:interval`. The `m2x:object` represents the object(s) not permitted skipping and `m2x:interval` represents interval(s), which means that the object(s) or interval(s) is(are) mandatory. This condition can be with store, copy and adapt as well as play. The child element, `m2x:relTimeDuration` is used to specify relative time interval in


© ISO/IEC 2007 — All rights reserved
Documents
Document Sharing Hub
Full document details: ISO_IEC 21000-5_2004_Amd 2_2007