INTERNATIONAL STANDARD

ISO/IEC 23912

First edition
2005-11-01

Corrected version
2006-04-01

Information technology — 80 mm (1,46 Gbytes per side) and 120 mm (4,70 Gbytes per side) DVD Recordable Disk (DVD-R)

Technologies de l'information — Disque enregistrable DVD (DVD-R) de 80 mm (1,46 GB par face) et 120 mm (4,7 GB par face) de diamètre

Reference number
ISO/IEC 23912:2005(E)

Documents
Document Sharing Hub
© ISO/IEC 2005

Full document details: ISO IEC 23912-2005 (2006)

PDF disclaimer

This PDF file may contain embedded typefaces. In accordance with Adobe's licensing policy, this file may be printed or viewed but shall not be edited unless the typefaces which are embedded are licensed to and installed on the computer performing the editing. In downloading this file, parties accept therein the responsibility of not infringing Adobe's licensing policy. The ISO Central Secretariat accepts no liability in this area.

Adobe is a trademark of Adobe Systems Incorporated.

Details of the software products used to create this PDF file can be found in the General Info relative to the file; the PDF-creation parameters were optimized for printing. Every care has been taken to ensure that the file is suitable for use by ISO member bodies. In the unlikely event that a problem relating to it is found, please inform the Central Secretariat at the address given below.

© ISO/IEC 2005

All rights reserved. Unless otherwise specified, no part of this publication may be reproduced or utilized in any form or by any means, electronic or mechanical, including photocopying and microfilm, without permission in writing from either ISO at the address below or ISO's member body in the country of the requester.

ISO copyright office
Case postale 56 • CH-1211 Geneva 20
Tel. + 41 22 749 01 11
Fax + 41 22 749 09 47
E-mail copyright@iso.org
Web www.iso.org

Published in Switzerland

© ISO/IEC 2005 – All rights reserved

Documents
Document Sharing Hub

Full document details: ISO IEC 23912-2005 (2006)

Contents

Page

Section 1 - General 1

1 Scope 1

2 Conformance 1
2.1 Optical Disk 1
2.2 Generating system 1
2.3 Receiving system 2

3 Normative references 2

4 Terms and definitions 2

5 Conventions and notations 4
5.1 Representation of numbers 4
5.2 Names 5

6 Acronyms 5

7 General description of a disk 6

8 General requirement 7
8.1 Environments 7
8.1.1 Test environment 7
8.1.2 Operating environment 7
8.1.3 Storage environment 8
8.1.4 Transportation 8
8.2 Safety requirements 9
8.3 Flammability 9

9 Reference measurement devices 9
9.1 Pick-Up Head (PUH) 9
9.1.1 PUH for measuring recorded disks 9
9.1.2 PUH for measuring unrecorded disks 11
9.2 Measurement conditions 12
9.2.1 Recorded and unrecorded disk 12
9.2.2 Recorded disk 12
9.2.3 Unrecorded disk 12
9.3 Normalized servo transfer function 12
9.4 Reference servo for axial tracking 13
9.5 Reference servo for radial tracking 14

Section 2 - Dimensional, mechanical and physical characteristics of the disk 16

10 Dimensional characteristics 16
10.1 Overall dimensions 17
10.2 First transition area 18
10.3 Second transition area 18
10.4 Clamping Zone 18
10.5 Third transition area 18
10.6 R-Information Zone 19
10.6.1 Sub-divisions of the R-Information Zone 19
10.7 Information Zone 19
10.7.1 Sub-divisions of the Information zone 19
10.8 Track geometry 20
10.9 Channel bit length 20
10.10 Rim area 21
10.11 Remark on tolerances 21
10.12 Label 21

Documents
Document Sharing Hub

© ISO/IEC 2005 — All rights reserved

Full document details: ISO IEC 23912-2005 (2006)

11 Mechanical parameters ... 22
11.1 Mass ... 22
11.2 Moment of inertia ... 22
11.3 Dynamic imbalance ... 22
11.4 Sense of rotation ... 22
11.5 Runout ... 22
11.5.1 Axial runout ... 22
11.5.2 Radial runout ... 22

12 Optical parameters ... 23
12.1 Recorded and unrecorded disk parameters ... 23
12.1.1 Index of refraction ... 23
12.1.2 Thickness of the transparent substrate ... 23
12.1.3 Angular deviation ... 23
12.1.4 Birefringence of the transparent substrate ... 24
12.2 Recorded disk reflectivity ... 24
12.3 Unrecorded disk parameters ... 24
12.3.1 Polarity of reflectivity modulation ... 24
12.3.2 Recording power sensitivity variation ... 24

Section 3 - Operational signals ... 25

13 Operational signals for recorded disk ... 25
13.1 Measurement conditions ... 25
13.2 Read conditions ... 25
13.3 Recorded disk high frequency (HF) signals ... 25
13.3.1 Modulated amplitude ... 25
13.3.2 Signal asymmetry ... 26
13.3.3 Cross-track signal ... 26
13.4 Quality of signals ... 26
13.4.1 Jitter ... 26
13.4.2 Random errors ... 26
13.4.3 Defects ... 26
13.5 Servo signals ... 27
13.5.1 Differential phase tracking error signal ... 27
13.5.2 Tangential push-pull signal ... 27
13.6 Groove wobble signal ... 29
14 Operational signals for the unrecorded disk ... 30
14.1 Measurement conditions ... 30
14.2 Recording conditions ... 30
14.3 Basic write strategy for media testing ... 30
14.3.1 Definition of the write pulse ... 31
14.4 Servo signals ... 31
14.4.1 Radial push-pull tracking error signal ... 32
14.4.2 Defects ... 33
14.5 Addressing signals ... 33
14.5.1 Land Pre-Pit signal ... 33
14.5.2 Groove wobble signal ... 35
14.5.3 Relation in phase between wobble and Land Pre-Pit ... 35

Section 4 - Data format ... 37

15 General ... 37

16 Data Frames ... 37
16.1 Identification Data (ID) ... 38
16.2 ID Error Detection Code ... 39
16.3 RSV ... 39
16.4 Error Detection Code ... 39

17 Scrambled Frames ... 39

18 ECC Block configuration ... 40

Documents
Document Sharing Hub

© ISO/IEC 2005 — All rights reserved

Full document details: ISO IEC 23912-2005 (2006)

19 Recording Frames 42
20 Modulation 43
21 Physical Sectors 43
22 Suppress control of the d.c. component 45
23 Linking scheme 46
23.1 Structure of linking 46
23.2 2K-Link and 32K-Link 47
23.3 Lossless-Link 47
Section 5 - Format of the Information Zone 50
24 General description of the Information Zone 50
24.1 Layout of the Information Zone 50
24.2 Physical Sector numbering 50
25 Lead-in and Lead-out Zone 51
25.1 Lead-in Zone 51
25.1.1 Initial Zone 52
25.1.2 Buffer Zone 0 52
25.1.3 R-Physical Format Information Zone 52
25.1.4 Reference Code Zone 54
25.1.5 Buffer Zone 1 54
25.1.6 Control Data Zone 55
25.1.7 Extra Border Zone 58
25.2 Lead-out Zone 58
Section 6 - Format of the Unrecorded Zone 59
26 General description of the Unrecorded Zone 59
26.1 Layout of the Unrecorded Zone 59
26.2 ECC Block address 59
26.3 ECC Block numbering 60
27 Pre-pit Data format 60
27.1 General description 60
27.2 Pre-pit block structure 62
27.3 Pre-pit data block configuration 64
27.3.1 Relative address 65
27.3.2 ECC Block address data configuration 66
27.3.3 Parity A and Parity B 66
27.3.4 Field ID0 67
27.3.5 Field ID1 68
27.3.6 Field ID2 and ID5 70
27.3.7 Field ID3 and Field ID4 75
28 Data structure of R-Information Zone 77
28.1 Layout of Power Calibration Area and Recording Management Area 77
28.2 Structure of the Power Calibration Area 77
28.3 Data configuration of the Recording Management Area (RMA) 78
28.3.1 Sector format of the Recording Management Area 78
28.3.2 Recording Management Data (RMD) 79
Annex A (normative) Measurement of the angular deviation α 88
Annex B (normative) Measurement of birefringence 90
Annex C (normative) Measurement of the differential phase tracking error 93
Annex D (normative) Measurement of light reflectance 97
Annex E (normative) Tapered cone for disk clamping 99
Annex F (normative) Measurement of jitter 100
Annex G (normative) 8-to-16 Modulation with RLL (2,10) requirements 103

Documents
Document Sharing Hub

© ISO/IEC 2005 — All rights reserved

Full document details: ISO IEC 23912-2005 (2006)

Annex H (normative) **Optimum Power Control** **113**
Annex J (normative) **Measurement of the groove wobble amplitude** **115**
Annex K (normative) **Measurement methods for the operational signals for an unrecorded disk** **117**
Annex L (normative) **NBCA Code** **118**
Annex M (normative) **Border Zone** **124**
Annex N (normative) **Write Strategy variations** **133**
Annex P (normative) **Measurement method of the Land Pre-Pit signal** **134**
Annex Q (informative) **Transportation** **135**

© ISO/IEC 2005 — All rights reserved

Documents
Document Sharing Hub
Full document details: ISO IEC 23912-2005 (2006)

Foreword

ISO (the International Organization for Standardization) and IEC (the International Electrotechnical Commission) form the specialized system for worldwide standardization. National bodies that are members of ISO or IEC participate in the development of International Standards through technical committees established by the respective organization to deal with particular fields of technical activity. ISO and IEC technical committees collaborate in fields of mutual interest. Other international organizations, governmental and non-governmental, in liaison with ISO and IEC, also take part in the work. In the field of information technology, ISO and IEC have established a joint technical committee, ISO/IEC JTC 1.

International Standards are drafted in accordance with the rules given in the ISO/IEC Directives, Part 2.

The main task of the joint technical committee is to prepare International Standards. Draft International Standards adopted by the joint technical committee are circulated to national bodies for voting. Publication as an International Standard requires approval by at least 75 % of the national bodies casting a vote.

Attention is drawn to the possibility that some of the elements of this document may be the subject of patent rights. ISO and IEC shall not be held responsible for identifying any or all such patent rights.

ISO/IEC 23912 was prepared by ECMA (as ECMA-359) and was adopted, under a special “fast-track procedure”, by Joint Technical Committee ISO/IEC JTC 1, *Information technology*, in parallel with its approval by national bodies of ISO and IEC.

This corrected version of ISO/IEC 23912:2005 incorporates the following corrections:

— description of Figure 20 corrected in 14.5.1;

— data for Table 26 corrected in 28.3.2.1;

— label for Figure F.3 corrected in F.4;

— Figure J.1 in J.2 corrected;

— on the third line of page 128 (M.3.1), the words "see Table M.2" replaced by "see Table M.3";

— the text of the last line of page 130 (M.3.1) corrected.

© ISO/IEC 2005 – All rights reserved

Documents
Document Sharing Hub
Full document details: ISO IEC 23912-2005 (2006)

Introduction

In June 2001 eleven members proposed to ECMA TC31 to develop a standard for 120 mm and 80 mm DVD Recordable optical disks using Organic Dye recording technology and TC31 adopted this project. In April 2004 ten members proposed to TC31 to restart this project and TC31 re-activated the work that has resulted in this International Standard.

This International Standard specifies two Types of Recordable optical disks, one (Type 1S) making use of recording on only a single side of the disk and yielding a nominal capacity of 4,70 Gbytes for a 120 mm disk and 1,46 Gbytes for an 80 mm disk, the other (Type 2S) making use of recording on both sides of the disk and yielding a nominal capacity of 9,4 Gbytes for a 120 mm disk and 2,92 Gbytes for an 80 mm disk.

© ISO/IEC 2005 – All rights reserved
Documents
Document Sharing Hub
Full document details: ISO IEC 23912-2005 (2006)

Information technology — 80 mm (1,46 Gbytes per side) and 120 mm (4,70 Gbytes per side) DVD Recordable Disk (DVD-R)

Section 1 - General

1 Scope

This International Standard specifies the mechanical, physical and optical characteristics of an 80 mm and a 120 mm DVD Recordable disk to enable the interchange of such disks. It specifies the quality of the pre-recorded, unrecorded and the recorded signals, the format of the data, the format of the information zone, the format of the unrecorded zone, and the recording method, thereby allowing for information interchange by means of such disks. This disk is identified as a DVD Recordable (DVD-R) disk.

This International Standard specifies

- 80 mm and 120 mm nominal diameter disks that may be either single or double sided,
- the conditions for conformance,
- the environments in which the disk is to be operated and stored,
- the mechanical and physical characteristics of the disk, so as to provide mechanical interchange between data processing systems,
- the format of the pre-recorded information on an unrecorded disk, including the physical disposition of the tracks and sectors, the error correcting codes and the coding method used,
- the format of the data and the recorded information on the disk, including the physical disposition of the tracks and sectors, the error correcting codes and the coding method used,
- the characteristics of the signals from pre-recorded and unrecorded areas on the disk, enabling data processing systems to read the pre-recorded information and to write to the disks,
- the characteristics of the signals recorded on the disk, enabling data processing systems to read the data from the disk.

This International Standard provides for interchange of disks between disk drives. Together with a standard for volume and file structure, it provides for full data interchange between data processing systems.

2 Conformance

2.1 Optical Disk

A claim of conformance shall specify the type of the disk, i.e. its size and whether it is single-sided or double sided. An optical disk shall be in conformance with this International Standard if it meets the mandatory requirements specified for this type.

2.2 Generating system

A generating system shall be in conformance with this International Standard if the optical disk it generates is in accordance with 2.1.

© ISO/IEC 2005 — All rights reserved

Documents
Document Sharing Hub
Full document details: ISO IEC 23912-2005 (2006)

2.3 Receiving system

A receiving system shall be in conformance with this International Standard if it is able to handle an optical disk according to 2.1.

3 Normative references

The following referenced documents are indispensable for the application of this document. For dated references, only the edition cited applies. For undated references, the latest edition of the referenced document (including any amendments) applies.

ISO/IEC 8859-1, *Information technology — 8-bit single-byte coded graphic character sets — Part 1: Latin alphabet No. 1*

ISO/IEC 8859-2, *Information technology — 8-bit single-byte coded graphic character sets — Part 2: Latin alphabet No. 2*

ISO/IEC 8859-3, *Information technology — 8-bit single-byte coded graphic character sets — Part 3: Latin alphabet No. 3*

ISO/IEC 8859-4, *Information technology — 8-bit single-byte coded graphic character sets — Part 4: Latin alphabet No. 4*

ECMA-287, *Safety of electronic equipment* – 2nd edition (December 2002)

4 Terms and definitions

For the purposes of this document, the following terms and definitions apply.

4.1
Block SYNC Guard Area
The recorded area in the first ECC block of the contiguous area of which recording is started from the unrecorded area by using 32K-Link.

4.2
Border Zone
The linking region that prevents the pick-up head from over running on an unrecorded area when a disk is played back in a partially recorded state.

4.3
Channel bit
The elements by which, after modulation, the binary values ZERO and ONE are represented on the disk by marks.

4.4
Clamping Zone
The annular part of the disk within which a clamping force is applied by a clamping device.

4.5
Data Zone
The zone between the Lead-in Zone and the Lead-out Zone in which user data is recorded. In Border recording mode, Border Zone is included in Data Zone.

4.6
Data Recordable Zone
The zone that is available to record user data.

4.7
Digital Sum Value (DSV)
The arithmetic sum obtained from a bit stream by allocating the decimal value 1 to bits set to ONE and the decimal value –1 to bits set to Zero.

4.8
Disk at once recording
A recording mode in which the Lead-in Zone, the user data and the Lead-out Zone are recorded sequentially.

© ISO/IEC 2005 — All rights reserved
AVA Documents Document Sharing Hub
Full document details: ISO IEC 23912-2005 (2006)

4.9
Disk Reference Plane
A plane defined by the perfectly flat annular surface of an ideal spindle onto which the Clamping Zone of the disk is clamped, and which is normal to the axis of rotation.

4.10
ECC Block address
The address embossed on the land as the Pre-pit Information, which represents the absolute physical address of the track used to define the recording position of each area. The address is equal to the bit-inverted numbers from b_{23} to b_4 of the Physical Sector Number recorded in the groove.

NOTE The "ECC Block address" definition is specific to this Standard.

4.11
Error Correction Code (ECC)
A mathematical computation yielding check bytes used for the detection and correction of errors in data.

4.12
Error Detection Code (EDC)
A code designed to detect certain kinds of errors in data.

Error Detection Code consists of data and the error detection parity.

4.13
Finalization
The action in which the Lead-in Zone and the Lead-out Zone are recorded.

4.14
Groove
The wobbled guidance track.

4.15
Incremental recording
A recording mode in which the disk is recorded in several distinct recording operations (for example at different times and using different recording drives). In this recording mode, the specified linking scheme shall be used.

4.16
Information Zone
The zone comprising the Lead-in Zone, the Data Zone and the Lead-out Zone.

4.17
Land
The area between the grooves.

4.18
Land Pre-Pit (LPP)
Pits embossed on the land during the manufacture of the disk substrate, which contain address information.

4.19
Lead-in Zone
The zone comprising Physical sectors adjacent to the inside of the Data Zone.

4.20
Lead-out Zone
The zone comprising Physical sectors adjacent to the outside of the Data Zone.

© ISO/IEC 2005 — All rights reserved

Documents
Document Sharing Hub
Full document details: ISO IEC 23912-2005 (2006)

4.21
Recording Management Area (RMA)
The area containing the Recording Management Data (RMD), situated adjacent to the inside of the Lead-in Zone.

4.22
Recording Management Data (RMD)
The information about the recording on the disk, including information on each recording mode.

4.23
R-Information Zone
The zone comprising the Power Calibration Area (PCA) and the Recording Management Area (RMA).

4.24
RZone
Continuous ECC blocks assigned to user data during Incremental recording mode and Restricted Overwrite mode.

4.25
Sector
The smallest addressable part of a track in the information zone of a disk that can be accessed independently of other addressable parts.

4.26
Substrate
A transparent layer of the disk, provided for mechanical support of the recording or recorded layer, through which the optical beam accesses the recordable / recorded layer.

4.27
Track
A 360° turn of a continuous spiral of recorded marks or groove.

4.28
Track pitch
The distance between adjacent average physical track centrelines of the wobbled grooves for the unrecorded disk, or between adjacent physical track centrelines of the successive recorded marks for the recorded disk, measured in the radial direction.

4.29
Zone
An annular area of the disk.

5 Conventions and notations

5.1 Representation of numbers

A measured value is rounded off to the least significant digit of the corresponding specified value. For instance, it implies that a specified value of 1,26 with a positive tolerance of + 0,01 and a negative tolerance of - 0,02 allows a range of measured values from 1,235 to 1,275.

Numbers in decimal notations are represented by the digits 0 to 9.

Numbers in hexadecimal notation are represented by the hexadecimal digits 0 to 9 and A to F in parentheses.

The setting of bits is denoted by ZERO and ONE.

Numbers in binary notations and bit patterns are represented by strings of digits 0 and 1, with the most significant bit shown to the left.

© ISO/IEC 2005 — All rights reserved
Documents
Document Sharing Hub
Full document details: ISO IEC 23912-2005 (2006)

Negative values of numbers in binary notation are given as Two's complement.

In each field the data is recorded so that the most significant byte (MSB), identified as Byte 0, is recorded first and the least significant byte (LSB) last. In a field of 8*n* bits, bit $b_{(8n-1)}$ shall be the most significant bit (msb) and bit b_0 the least significant bit (lsb). Bit $b_{(8n-1)}$ is recorded first.

5.2 Names

The names of entities, e.g. specific tracks, fields, areas, zones, etc. are given a capital initial.

6 Acronyms

AP	Amplitude of the land Pre-Pit signal (without wobble amplitude)
AR	Aperture Ratio (of the Land Pre-Pit after recording)
BP	Byte Position
BPF	Band Pass Filter
CLV	Constant Linear Velocity
CNR	Carrier to Noise Ratio
DCC	DC Component suppress control
DSV	Digital Sum Value
ECC	Error Correction Code
EDC	Error Detection Code
HF	High Frequency
ID	Identification Data
LA	Lead-out Attribute
IED	ID Error Detection (code)
LPF	Low-Pass Filter
LPP	Land Pre-Pit
LSB	Least Significant Byte
lsb	least significant bit
MSB	Most Significant Byte
msb	most significant bit
NBCA	Narrow Burst Cutting Area
NRZI	Non Return to Zero Inverted
OPC	Optimum Power Control

© ISO/IEC 2005 — All rights reserved

Documents
Document Sharing Hub
Full document details: ISO IEC 23912-2005 (2006)

PBS	Polarizing Beam Splitter
PCA	Power Calibration Area
PI	Parity (of the) Inner (code)
PLL	Phase Locked Loop
PO	Parity (of the) Outer (code)
PSN	Physical Sector Number
PUH	Pick-Up Head
RBP	Relative Byte Position
RBW	Resolution Bandwidth
RESYNC	Re-Synchronization
RMA	Recording Management Area
RMD	Recording Management Data
RS	Reed-Solomon (code)
SYNC	Synchronization

7 General description of a disk

The 80 mm and 120 mm optical disks that are the subject of this International Standard consist of two substrates bonded together by an adhesive layer, so that the recording layer (single-sided disk) or recording layers (double-sided disk) are on the inside. The centring of the disk is performed on the edge of the centre hole of the assembled disk on the side currently read. Clamping is performed in the Clamping Zone. The DVD Recordable Disk (DVD-R) may be either double-sided or single-sided with respect to the number of recording layers. A double-sided disk has a recording layer on the inside of each substrate. A single-sided disk has one substrate with the recording layer on the inside and a dummy substrate without a recording layer. A recorded disk provides for the data to be read many times by an optical beam of a drive. Figure 1 shows schematically a double-sided (Type 2S) and a single-sided (Type 1S) disk.

Type 1S consists of a substrate, a single recording layer, an adhesive layer, and a dummy substrate. The recording layer can be accessed from one side only. The nominal capacity is 1,46 Gbytes for an 80 mm disk and 4,70 Gbytes for a 120 mm disk.

Type 2S consists of two substrates, two recording layers, and an adhesive layer. From one side of the disk only one recording layer can be accessed. The nominal total capacity is 2,92 Gbytes for an 80 mm disk and 9,40 Gbytes for a 120 mm disk.

© ISO/IEC 2005 — All rights reserved
Documents
Document Sharing Hub
Full document details: ISO IEC 23912-2005 (2006)

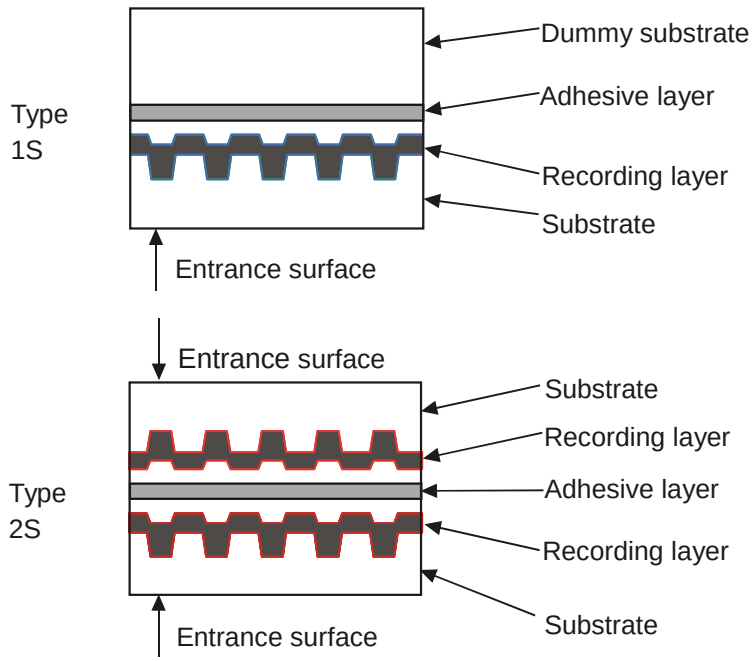

Figure 1 - Disk outline

8 General requirement

8.1 Environments

8.1.1 Test environment

The test environment is the environment where the air immediately surrounding the disk has the following properties.

	a) For dimensional measurements	b) For other measurements
temperature :	23 °C ± 2 °C	15 °C to 35 °C
relative humidity :	45 % to 55 %	45 % to 75 %
atmospheric pressure :	86 kPa to 106 kPa	86 kPa to 106 kPa

Unless otherwise stated, all tests and measurements shall be made in this test environment.

8.1.2 Operating environment

This International Standard requires that an optical disk which meets all mandatory requirements of this International Standard in the specified test environment provides data interchange over the specified ranges of environmental parameters in the operating environment.

Disks used for data interchange shall be operated under the following conditions, when mounted in the drive supplied with voltage and measured on the outside surface of the disk.

© ISO/IEC 2005 — All rights reserved

Documents
Document Sharing Hub
Full document details: ISO IEC 23912-2005 (2006)

8.1.2.1 Environmental conditions during reading

The disk exposed to storage conditions shall be conditioned in the operating environment for at least two hours before operating.

temperature :	-25 °C to 70 °C
relative humidity :	3 % to 95 %
absolute humidity :	0,5 g/m^3 to 60 g/m^3
temperature gradient :	15 °C/h max.
relative humidity gradient :	10 %/h max.

There shall be no condensation of moisture on the disk.

8.1.2.2 Environmental conditions during recording

The disk exposed to storage conditions shall be conditioned in the recording environment for at least two hours before operating.

temperature :	-5 °C to 55 °C
relative humidity :	3 % to 95 %
absolute humidity :	0,5 g/m^3 to 30 g/m^3

There shall be no condensation of moisture on the disk.

8.1.3 Storage environment

The storage environment is the environment where the air immediately surrounding the optical disk shall have the following properties.

temperature :	-20 °C to 50 °C
relative humidity :	5 % to 90 %
absolute humidity :	1 g/m^3 to 30 g/m^3
atmospheric pressure :	75 kPa to 106 kPa
temperature variation :	15 °C /h max.
relative humidity variation :	10 %/h max.

8.1.4 Transportation

This International Standard does not specify requirements for transportation; guidance is given in Annex Q.

© ISO/IEC 2005 — All rights reserved
Documents
Document Sharing Hub
Full document details: ISO IEC 23912-2005 (2006)

8.2 Safety requirements

The disk shall satisfy the requirements of Standard ECMA-287, when used in the intended manner or in any foreseeable use in an information system.

8.3 Flammability

The disk shall be made from materials that comply with the flammability class for HB materials, or better, as specified in Standard ECMA-287.

9 Reference measurement devices

The reference measurement devices for recorded disks and for unrecorded disks shall be used for the measurements of optical parameters for conformance with this International Standard. The critical components of these devices have specific properties defined in this clause.

9.1 Pick-Up Head (PUH)

9.1.1 PUH for measuring recorded disks

The optical system for measuring the optical parameters is shown in Figure 2. The optical system shall be used to measure the parameters specified for the recorded disk. Different components and locations of the components are permitted, provided that the performance remains the same as the set-up in Figure 2. The optical system shall be such that the detected light reflected from the entrance surface of the disk is minimized so as not to influence the accuracy of measurement. The combination of the polarizing beam splitter C with the quarter-wave plate D separates the incident optical beam and the beam reflected by the optical disk F. The beam splitter C shall have a p-s intensity reflectance ratio of at least 100. Optics G generates an astigmatic difference and collimates the light reflected by the recorded layer of the optical disk F for astigmatic focusing and read-out. The position of the quadrant photo detector H shall be adjusted so that the light spot becomes a circle the centre of which coincides with the centre of the quadrant photo detector H when the objective lens is focused on the recorded layer. An example of such a photo detector H is shown in Figure 2.

© ISO/IEC 2005 — All rights reserved

Documents
Document Sharing Hub
Full document details: ISO IEC 23912-2005 (2006)

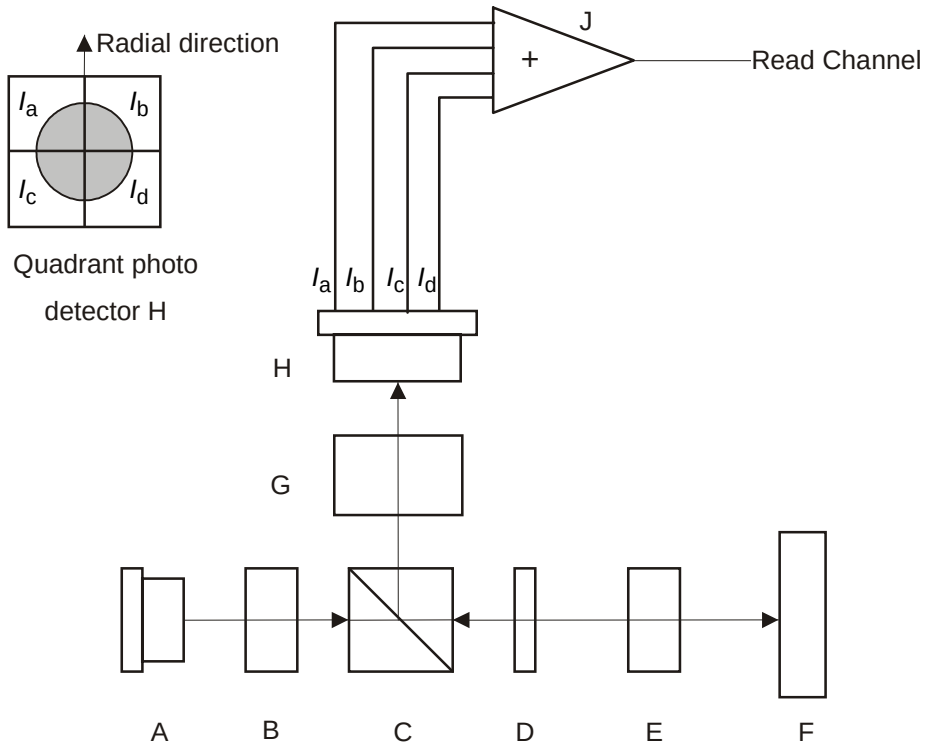

A Laser diode	F Optical disk
B Collimator lens	G Optics for the astigmatic focusing method
C Polarizing beam splitter	H Quadrant photo detector
D Quarter-wave plate	I_a, I_b, I_c, I_d Output currents from the quadrant photo detector
E Objective lens	J d.c. coupled amplifier

Figure 2 - Optical system of PUH for measuring recorded disk

The focused optical beam used for reading data shall have the following properties:

Wavelength (λ)	650 nm ± 5 nm
Polarization of the light	circular
Polarizing beam splitter	shall be used unless otherwise stated
Numerical aperture	0,60 ± 0,01
Light intensity at the rim of the pupil of the objective lens	60 % to 70 % of the maximum intensity level in radial direction, and over 90 % of the maximum intensity level in the tangential direction
Wave front aberration after passing through an ideal substrate (Thickness: 0,6 mm and index of refraction: 1,56)	0,033 λ rms max.

© ISO/IEC 2005 — All rights reserved

Documents
Document Sharing Hub
Full document details: ISO IEC 23912-2005 (2006)

Relative intensity noise (RIN)
10 log [(a.c. light power density / Hz) / d.c. light power] -134 dB/Hz max.

9.1.2 PUH for measuring unrecorded disks

The optical system for measuring the parameters is shown in Figure 3. The optical system shall be used to measure the parameters specified for the unrecorded disk and for making the recordings that are necessary for disk measurements. Different components and locations of the components are permitted, provided that the performance remains the same as the set-up in Figure 3. The optical system shall be such that the detected light reflected from the entrance surface of the disk is minimized so as not to influence the accuracy of the measurements.

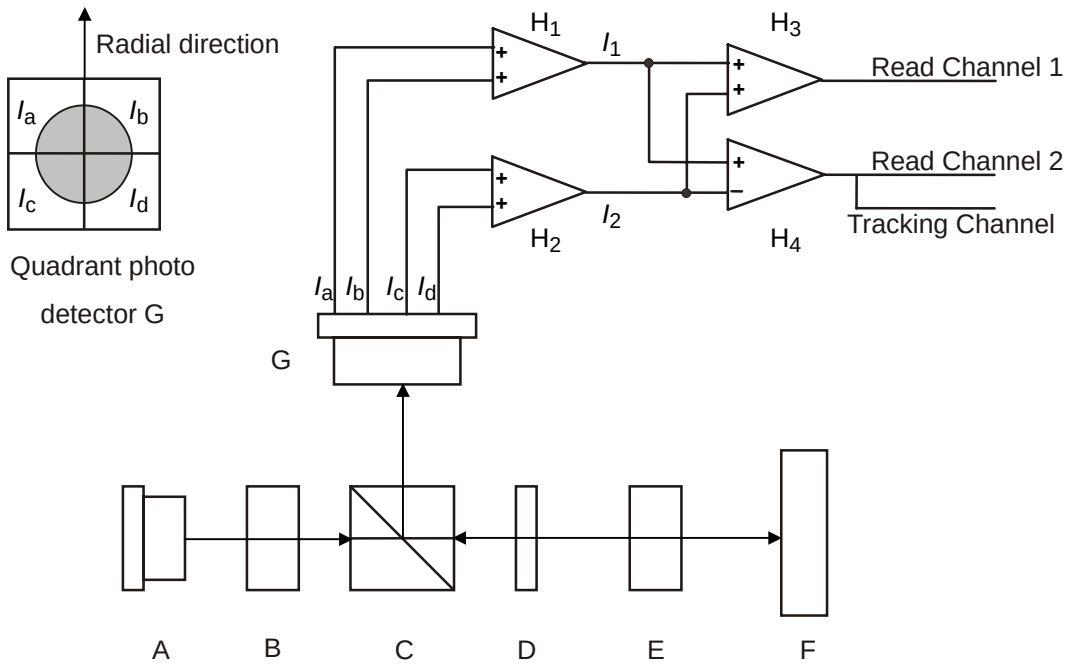

A Laser diode

B Collimator lens

C Polarizing beam splitter

D Quarter-wave plate

E Objective lens

F Optical disk

G Quadrant photo detector

H_1, H_2, H_3, H_4 d.c.-coupled amplifier

I_a, I_b, I_c, I_d Output currents from the quadrant photo detector

Figure 3 - Optical system of PUH for measuring unrecorded disks

The combination of polarizing beam splitter C and a quarter-wave plate D shall separate the entrance optical beam from a laser diode A and the reflected optical beam from an optical disk F. The beam splitter C shall have a p-s intensity reflectance ratio of at least 100.

The focused optical beam used for writing and reading data shall have the following properties:

Wavelength (λ) $650\ \mathrm{nm}^{+10\ \mathrm{nm}}_{-5\ \mathrm{nm}}$

Polarization of the light circular

© ISO/IEC 2005 — All rights reserved

Documents
Document Sharing Hub
Full document details: ISO IEC 23912-2005 (2006)

Numerical aperture	0,60 ± 0,01
Light intensity at the rim of the pupil of the objective lens	over 40 % of the maximum intensity level in the radial direction and over 50 % of the maximum intensity level in the tangential direction
Wave front aberration after passing through an ideal substrate (Thickness: 0,6 mm and index of refraction: 1,56)	0,033 λ rms max.
Relative intensity noise (RIN) of the laser diode 10 log [(a.c. light power density /Hz) / d.c. light power]	- 130 dB/Hz max.

9.2 Measurement conditions

9.2.1 Recorded and unrecorded disk

Scanning velocity at a Channel bit rate of 26,15625 Mbit/s	3,49 m/s ± 0,03 m/s
Clamping force	2,0 N ± 0,5 N
Clamping Zone	See 10.4 and Annex A.
Tapered cone angle	40,0°± 0,5° see Annex E

9.2.2 Recorded disk

The measuring conditions for the recorded disk operational signals shall be as specified in Annex F.

9.2.3 Unrecorded disk

The measuring conditions for the unrecorded disk operational signals shall be as specified in Annex K.

9.3 Normalized servo transfer function

In order to specify the servo system for axial and radial tracking, a function H_s is used (equation I). It specifies the nominal values of the open-loop transfer function H of the Reference Servo(s) in the frequency range 23,1 Hz to 10 kHz.

$$H_s(i\omega) = \frac{1}{3} \times \left(\frac{\omega_0}{i\omega}\right)^2 \times \frac{1 + \frac{3i\omega}{\omega_0}}{1 + \frac{i\omega}{3\omega_0}} \qquad \text{(I)}$$

where

$\omega = 2\pi f$

$\omega_0 = 2\pi f_0$

$i = \sqrt{-1}$

f_0 is the 0 dB crossover frequency of the open loop transfer function.

© ISO/IEC 2005 — All rights reserved
Documents
Document Sharing Hub
Full document details: ISO IEC 23912-2005 (2006)

The crossover frequencies of the lead-lag network of the servo are given by

lead break frequency : $f_1 = f_0 \times 1/3$

lag break frequency : $f_2 = f_0 \times 3$

9.4 Reference servo for axial tracking

For an open loop transfer function H of the Reference Servo for axial tracking, $|1+H|$ is limited as schematically shown by the shaded surface of Figure 4.

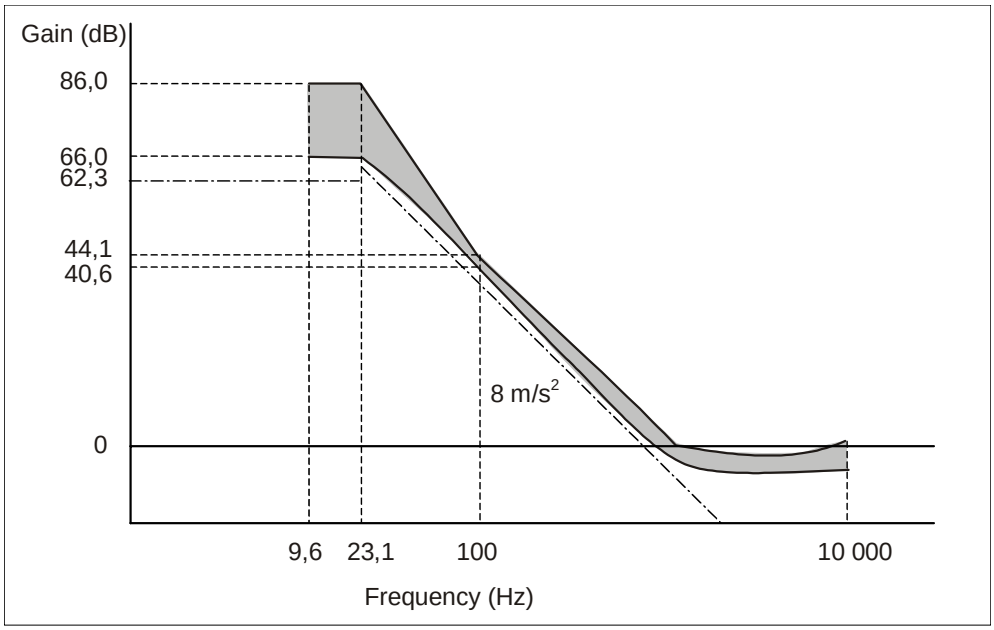

Figure 4 - Reference servo for axial tracking

Bandwidth 100 Hz to 10 kHz

$|1 + H|$ shall be within 20 % of $|1+H_s|$.

The crossover frequency $f_0 = \omega_0 / 2\pi$ shall be specified by equation (II), where α_{max} shall be 1,5 times larger than the expected maximum axial acceleration of 8 m/s^2. The tracking error e_{max} shall not exceed 0,23 μm. Thus, the crossover frequency f_0 shall be

$$f_0 = \frac{1}{2\pi}\sqrt{\frac{3 \times \alpha_{max}}{e_{max}}} = \frac{1}{2\pi}\sqrt{\frac{3 \times 8 \times 1{,}5}{0{,}23 \times 10^{-6}}} = 2{,}0\text{kHz} \qquad \text{(II)}$$

The axial tracking error e_{max} is the peak deviation measured axially above or below the 0 level.

Bandwidth 23,1 Hz to 100 Hz

$|1 + H|$ shall be within the limits defined by the following four points.

40,6 dB at 100 Hz ($|1 + H_s|$ - 20% at 100 Hz)

66,0 dB at 23,1 Hz ($|1 + H_s|$ - 20% at 23,1 Hz)

© ISO/IEC 2005 — All rights reserved

Documents
Document Sharing Hub
Full document details: ISO IEC 23912-2005 (2006)

86,0 dB at 23,1 Hz ($|1 + H_s|$ - 20% at 23,1 Hz add 20 dB)

44,1 dB at 100 Hz ($|1 + H_s|$ + 20% at 100 Hz)

Bandwidth 9,6 Hz to 23,1 Hz

$|1 + H|$ shall be between 66,0 dB and 86,0 dB.

9.5 Reference servo for radial tracking

For an open-loop transfer function, H, of the Reference servo for radial tracking, $|1+ H|$ shall be limited within the shaded area shown in Figure 5.

The radial track deviation is the peak deviation measured radially inward or outward from the 0 level.

Bandwidth from l00 Hz to 10k Hz

$|1 + H|$ shall be within 20 % of $|1+H_s|$.

The crossover frequency $f_0 = \omega_0 / 2\pi$ shall be given by the equation (III), where α_{max} shall be 1,5 times as large as the expected radial acceleration of 1,1 m/s^2 and e_{max} shall not exceed 0,022 μm. Thus the crossover frequency f_0 shall be:

$$f_0 = \frac{1}{2\pi}\sqrt{\frac{3 \times \alpha_{max}}{e_{max}}} = \frac{1}{2\pi}\sqrt{\frac{3 \times 1{,}1 \times 1{,}5}{0{,}022 \times 10^{-6}}} = 2{,}4 \text{ kHz} \qquad \text{(III)}$$

Bandwidth from 23,1 Hz to 100Hz

$|1+ H|$ shall be within the limits enclosed by the following four points.

43,7 dB at 100 Hz ($|1 + H_s|$ - 20 % at 100 Hz)

69,2 dB at 23,1 Hz ($|1 + H_s|$ - 20 % at 23,1 Hz)

89,2 dB at 23,1 Hz ($|1 + H_s|$ - 20 % at 23,l Hz add 20 dB)

47,3 dB at 100 Hz ($|1 + H_s|$ + 20 % at 100 Hz)

Bandwidth from 9,6 Hz to 23,1 Hz

$|1 + H|$ shall be between 69,2 dB and 89,2 dB.

© ISO/IEC 2005 — All rights reserved

Documents
Document Sharing Hub
Full document details: ISO IEC 23912-2005 (2006)

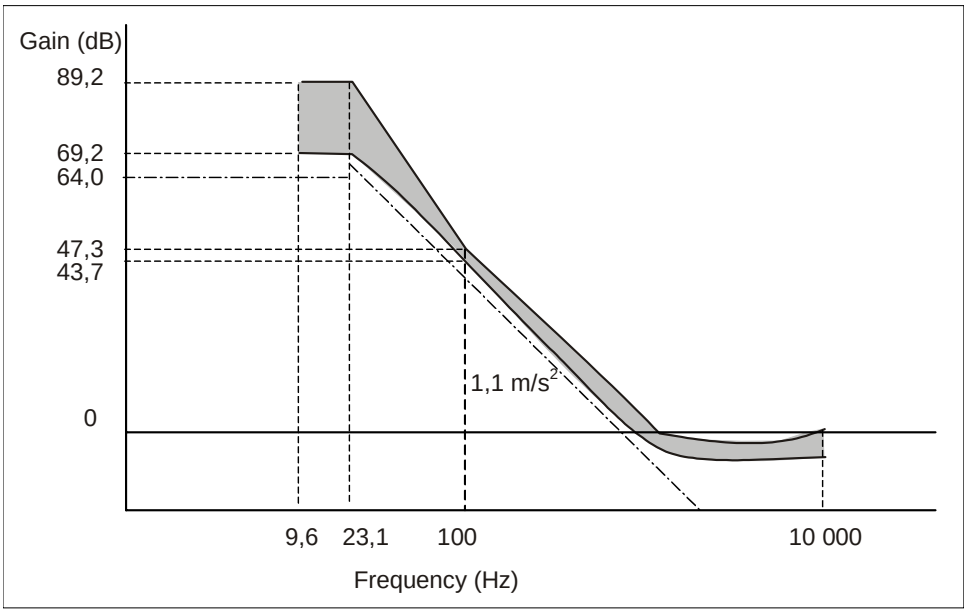

Figure 5 - Reference servo for radial tracking

© ISO/IEC 2005 — All rights reserved

Documents
Document Sharing Hub
Full document details: ISO IEC 23912-2005 (2006)

Section 2 - Dimensional, mechanical and physical characteristics of the disk

10 Dimensional characteristics

Dimensional characteristics are specified for those parameters deemed mandatory for interchange and compatible use of the disk. Where there is freedom of design, only the functional characteristics of the elements described are indicated. Figures 6, 7 and 8 show the dimensional requirements in summarized form. The different parts of the disk are described from the centre hole to the outside rim.

The dimensions are referred to two Reference Planes P and Q.

Reference Plane P is the primary Reference Plane. It is the plane on which the bottom surface of the Clamping Zone (see 10.4) rests.

Reference Plane Q is the plane parallel to Reference Plane P at the height of the top surface of the Clamping Zone.

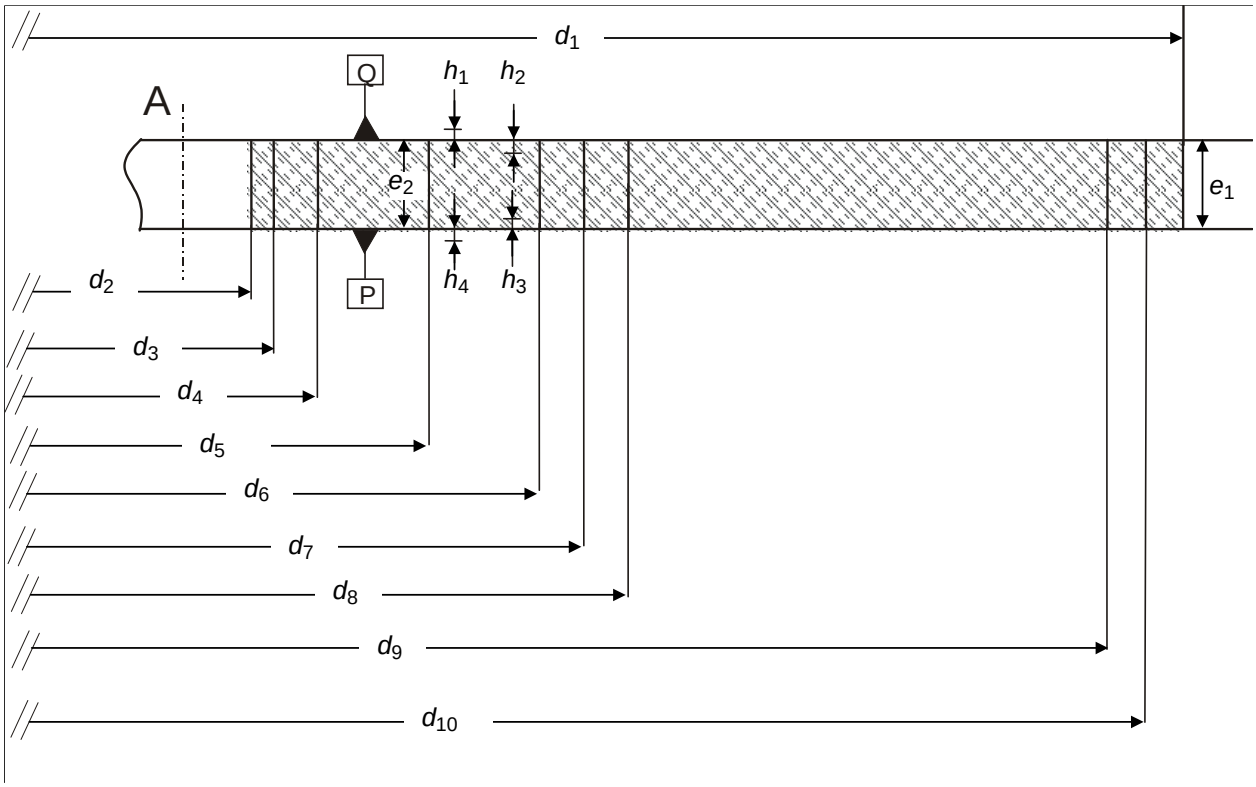

Figure 6 - Areas of the disk

© ISO/IEC 2005 — All rights reserved
Documents
Document Sharing Hub
Full document details: ISO IEC 23912-2005 (2006)

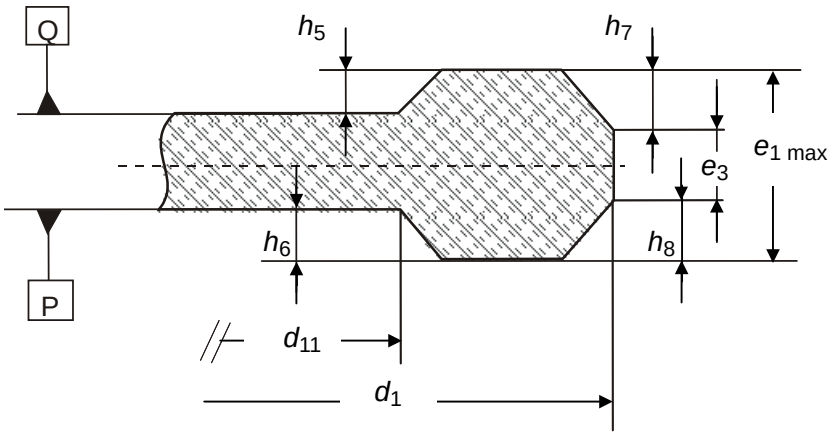

Figure 7 - Rim area

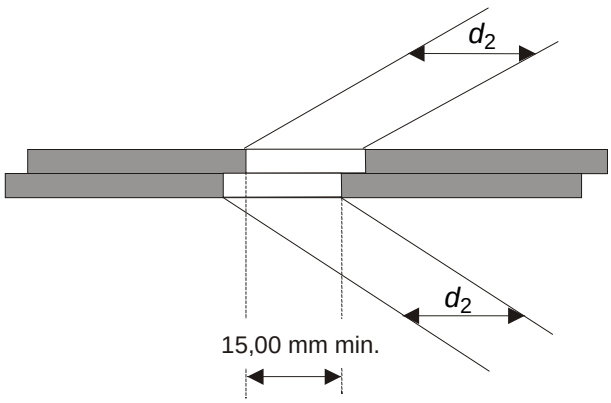

Figure 8 - Hole of the assembled disk

10.1 Overall dimensions

The 120 mm disk shall have an overall diameter

d_1 = 120,00 mm ± 0,30 mm

The 80 mm disk shall have an overall diameter

d_1 = 80,00 mm ± 0,30 mm

The centre hole of a substrate or a dummy substrate shall have a diameter

$$d_2 = 15{,}00\ \text{mm}^{+0{,}15\ \text{mm}}_{-0{,}00\ \text{mm}}$$

The diameter of the hole of an assembled disk, i.e. with both parts bonded together, shall be 15,00 mm min. See Figure 8. There shall be no burr on both edges of the centre hole.

The edge of the centre hole shall be rounded off or chamfered. The rounded radius shall be 0,1 mm max. The chamfer shall extend over a height of 0,1 mm max.

© ISO/IEC 2005 — All rights reserved

Documents
Document Sharing Hub
Full document details: ISO IEC 23912-2005 (2006)

The thickness of the disk, including adhesive layer and label(s), shall be

$$e_1 = 1{,}20 \text{ mm}^{+0{,}30 \text{ mm}}_{-0{,}06 \text{ mm}}$$

See Figure 6.

10.2 First transition area

In the area defined by diameter d_2 and

d_3 = 16,0 mm min.

the surface of the disk is permitted to be above the Reference Plane P and/or below Reference Plane Q by 0,10 mm max. See Figure 6.

10.3 Second transition area

This area shall extend between diameter d_3 and diameter

d_4 = 22,0 mm max.

In this area the disk may have an uneven surface of burrs up to 0,05 mm max. beyond Reference Planes P and/or Q. See Figure 6.

10.4 Clamping Zone

This zone shall extend between diameter d_4 and diameter

d_5 = 33,0 mm min.

Each side of the Clamping Zone shall be flat within 0,1 mm. The top side of the Clamping Zone, i.e. that of Reference Plane Q shall be parallel to the bottom side, i.e. Reference Plane P within 0,1 mm.

In the Clamping Zone the thickness e_2 of the disk shall be

$$e_2 = 1{,}20 \text{ mm}^{+0{,}20 \text{ mm}}_{-0{,}10 \text{ mm}}$$

See Figure 6.

10.5 Third transition area

This area shall extend between diameter d_5 and diameter

d_6 = 40,0 mm max. for the 120mm diameter disk or

d_6 = 37,0 mm max. for the 80mm diameter disk.

In this area the top surface is permitted to be above the Reference Plane Q by

h_1 = 0,25 mm max.

or below Reference Plane Q by

© ISO/IEC 2005 — All rights reserved
Documents
Document Sharing Hub
Full document details: ISO IEC 23912-2005 (2006)

h_2 = 0,10 mm max.

The bottom surface is permitted to be above Reference Plane P by

h_3 = 0,10 mm max.

or below Reference Plane P by

h_4 = 0,25 mm max.

See Figure 6.

10.6 R-Information Zone

The R-Information Zone shall extend from d_7 = 44,00 mm min. which is the beginning of the Power Calibration Area to the beginning of the Lead-in Zone as specified in clause 28.

In the R-Information Zone the thickness of the disk shall be equal to e_1 specified in 10.1

See Figure 6.

10.6.1 Sub-divisions of the R-Information Zone

The main parts of the R-Information Zone are

- the Power Calibration Area (PCA)
- the Recording Management Area (RMA)

10.7 Information Zone

The Information Zone shall extend from the beginning of the Lead-in Zone to diameter d_{10} the value of which is specified in Table 1.

In the Information Zone the thickness of the disk shall be equal to e_1 specified in 10.1. See Figure 6.

10.7.1 Sub-divisions of the Information zone

The main parts of the Information Zone are

- the Lead-in Zone
- the Data Zone
- the Lead-out Zone

10.7.1.1 Lead-in Zone

The Lead-in Zone shall extend between the outer diameter of the R-Information Zone as specified in 26.3 and diameter d_8. See Figure 6.

© ISO/IEC 2005 — All rights reserved

Documents
Document Sharing Hub
Full document details: ISO IEC 23912-2005 (2006)

10.7.1.2 Data Zone

The Data Zone shall start at

$$d_8 = 48{,}0\ \text{mm}^{+0{,}0\ \text{mm}}_{-0{,}2\text{mm}}$$

and shall end at

d_9 = 116,0 mm max. for the 120 mm diameter disk or

d_9 = 76,0 mm max. for the 80 mm diameter disk.

See Figure 6.

10.7.1.3 Lead-out Zone

The Lead-out Zone shall start at d_9 and shall end at d_{10}. The value of d_{10} depends on the length of the Data Zone as shown in Table 1. See Figure 6.

Table 1 – End of the Information Zone

Outer diameter d_9 of the Data Zone	Value of diameter d_{10} for the 120 mm disk	Value of diameter d_{10} for the 80 mm disk
Less than 68,0 mm	70,0 mm min.	
68,0 mm to 115,0 mm	Outer diameter of the Data Zone + 2,0 mm min.	
115,0 mm to 116,0 mm	117,0 mm min.	
Less than 68,0 mm		70,0 mm min.
68,0 mm to 75,0 mm		Outer diameter of the Data Zone + 2,0 mm min.
75,0 mm to 76,0 mm		77,0 mm min.

10.8 Track geometry

In the R-Information Zone and Information Zone tracks are constituted by a 360° turn of a spiral.

The track pitch averaged over the data zone shall be 0,74 µm ± 0,01 µm.

The maximum deviation of the track pitch from 0,74 µm shall be ± 0,03 µm.

10.9 Channel bit length

The R-Information Zone and Information Zone shall be recorded in CLV mode. The Channel bit length averaged over the Data Zone shall be 133,3 nm ± 1,4 nm.

© ISO/IEC 2005 — All rights reserved
Documents
Document Sharing Hub
Full document details: ISO IEC 23912-2005 (2006)

10.10 Rim area

The rim area shall be that area extending from diameter

d_{11} = 118,0 mm min. for the 120 mm disk or

d_{11} = 78,0 mm min. for the 80 mm disk

to diameter d_1. In this area the top surface is permitted to be above Reference Plane Q by

h_5 = 0,1 mm max.

and the bottom surface is permitted to be below Reference Plane P by

h_6 = 0,1 mm max.

The total thickness of this area shall not be greater than 1,50 mm, i.e. the maximum value of e_1. The thickness of the rim proper shall be

e_3 = 0,6 mm min.

The outer edges of the disk shall be either rounded off with a rounding radius of 0,2 mm max. or be chamfered over

h_7 = 0,2 mm max.

h_8 = 0,2 mm max.

See Figure 7.

10.11 Remark on tolerances

All heights specified in the preceding clauses and indicated by h_i are independent from each other. This means that, for example, if the top surface of the third transition area is below Reference Plane Q by up to h_2, there is no implication that the bottom surface of this area has to be above Reference Plane P by up to h_3. Where dimensions have the same - generally maximum - numerical value, this does not imply that the actual values have to be identical.

10.12 Label

The label shall be placed on the side of the disk opposite the entrance surface for the information to which the label is related. The label shall be placed either on an outer surface of the disk or inside the disk bonding plane. In the former case, the label shall not extend over the Clamping Zone. In the latter case, the label may extend over the Clamping Zone. In both cases, the label shall not extend over the rim of the centre hole nor over the outer edge of the disk. The label should not affect the performance of the disk. Labels shall not be attached to either of the read out surfaces of a double sided disk.

© ISO/IEC 2005 — All rights reserved

Documents
Document Sharing Hub
Full document details: ISO IEC 23912-2005 (2006)

11 Mechanical parameters

11.1 Mass

The mass of the 120 mm disk shall be in the range 13 g to 20 g.

The mass of the 80 mm disk shall be in the range 6 g to 9 g.

11.2 Moment of inertia

The moment of inertia of the 120 mm disk, relative to its rotation axis, shall not exceed 0,040 g·m^2.

The moment of inertia of the 80 mm disk, relative to its rotation axis, shall not exceed 0,010 g·m^2.

11.3 Dynamic imbalance

The dynamic imbalance of the 120 mm disk, relative to its rotation axis, shall not exceed 0,010 g·m.

The dynamic imbalance of the 80 mm disk, relative to its rotation axis, shall not exceed 0,0045 g·m.

11.4 Sense of rotation

The sense of rotation of the disk shall be counter clockwise as seen by the optical system.

11.5 Runout

11.5.1 Axial runout

When measured by the PUH with the Reference Servo for axial tracking, the disk rotating at the scanning velocity, the deviation of the recorded layer from its nominal position in the direction normal to the Reference Planes shall not exceed 0,3 mm for the 120 mm disk and 0,2 mm for the 80 mm disk.

The residual tracking error below 10 kHz, measured using the Reference Servo for axial tracking, shall be less than 0,23 µm. The measuring filter shall be a Butterworth LPF, f_c (-3dB): 10 kHz, slope: -80 dB/decade.

11.5.2 Radial runout

The runout of the outer edge of the disk shall be less than 0,30 mm, peak-to-peak.

The radial runout of tracks at the rotational frequency determined by the scanning velocity shall be less than 70 µm, peak-to-peak.

The residual tracking error below 1,1 kHz, measured using the Reference Servo for radial tracking, shall be less than 0,022 µm. The measuring filter shall be a Butterworth LPF, f_c (-3dB): 1,1 kHz, slope: -80 dB/decade.

The rms noise value of the residual error signal in the frequency band from 1,1 kHz to 10 kHz, measured with an integration time of 20 ms, using the Reference Servo for radial tracking, shall be less than 0,016 µm. The measuring filter shall be a Butterworth BPF, frequency range (-3dB): 1,1 kHz, slope: +80 dB/decade to 10 kHz, slope: - 80 dB/decade.

© ISO/IEC 2005 — All rights reserved
Documents
Document Sharing Hub
Full document details: ISO IEC 23912-2005 (2006)

12 Optical parameters

12.1 Recorded and unrecorded disk parameters

12.1.1 Index of refraction

The index of refraction of the substrate shall be 1,55 ± 0,10.

12.1.2 Thickness of the transparent substrate

The thickness of the substrate shall be determined by its index of refraction as specified in Figure 9.

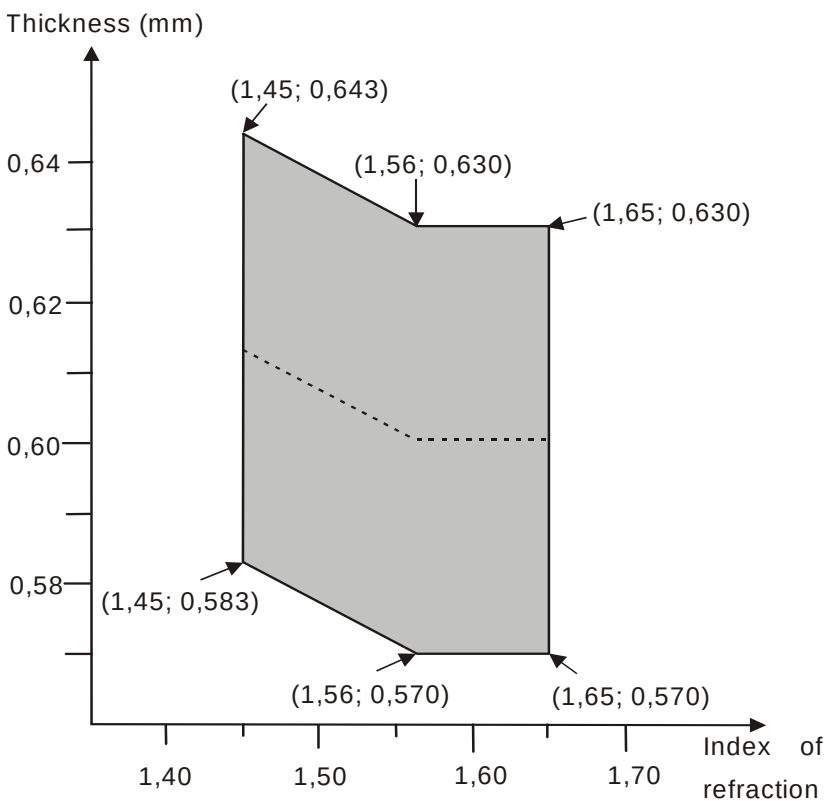

Figure 9 - Substrate thickness as a function of the index of refraction

12.1.3 Angular deviation

The angular deviation is the angle α between a parallel incident beam and the reflected beam. The incident beam shall have a diameter in the range 0,3 mm to 3,0 mm. This angle includes deflection due to the entrance surface and to unparallelism of the recorded layer, see Annex A, Figure A.1. It shall meet the following requirements when measured according to Annex A.

In radial direction: α = 0,80° max.

In tangential direction: α = 0,30° max.

© ISO/IEC 2005 — All rights reserved

Documents
Document Sharing Hub
Full document details: ISO IEC 23912-2005 (2006)

12.1.4 Birefringence of the transparent substrate

The birefringence of the transparent substrate shall be 100 nm max. when measured according to Annex B.

12.2 Recorded disk reflectivity

When measured according to Annex D, the reflectivity of the recorded layer(s) shall be 45 % to 85 % (PUH with PBS) or 60 % to 85 % (PUH without PBS).

12.3 Unrecorded disk parameters

12.3.1 Polarity of reflectivity modulation

The reflectivity is high in unrecorded areas and changes to low in the recorded marks.

12.3.2 Recording power sensitivity variation

The variation in optimum recording power over the surface of the disk shall be less than $\pm 0{,}05\ P_o$. See Annex H.

© ISO/IEC 2005 — All rights reserved
Documents
Document Sharing Hub
Full document details: ISO IEC 23912-2005 (2006)

Section 3 - Operational signals

13 Operational signals for recorded disk

13.1 Measurement conditions

The operational signals shall be measured after recording 8/16 modulated data in more than 5 tracks.

The Pick-Up Head (PUH) shall be as specified in 9.1.1.

The measurement conditions shall be as specified in 9.2.1 and 9.2.2.

The HF signal equalizing for jitter measurement shall be as specified in Annex F.

The normalized servo transfer function shall be as specified in 9.3.

The reference servo for axial tracking shall be as specified in 9.4.

The reference servo for radial tracking shall be as specified in 9.5.

13.2 Read conditions

The power of the read spot shall not exceed 1,0 mW (continuous wave).

13.3 Recorded disk high frequency (HF) signals

The HF signal is obtained by summing the currents of the four elements of the quadrant photo detector. These currents are modulated by diffraction and reflectivity changes of the light beam at the recorded marks representing the information on the recorded layer. Recording power conditions are specified in Annex H. All measurements, except jitter are executed on the HF signal before equalizing.

13.3.1 Modulated amplitude

The peak-to-peak value generated by the longest recorded mark and space is I_{14}.

The peak value corresponding to the HF signal before high-pass filtering is I_{14H}.

The peak-to-peak value generated by the shortest recorded mark and space is I_3.

The zero level is the signal level obtained when no disk is inserted.

These parameters shall satisfy the following requirements.

I_{14} / I_{14H} = 0,60 min.

I_3 / I_{14} = 0,15 min.

The maximum value of (I_{14H} max. - I_{14H} min.) / I_{14H} max. shall be as specified in Table 2.

See Figure 10.

© ISO/IEC 2005 — All rights reserved

Documents
Document Sharing Hub
Full document details: ISO IEC 23912-2005 (2006)

Table 2 – Maximum value of (I_{14H} max. - I_{14H} min.) / I_{14H} max.

	Over one disk	Over one revolution
PUH with PBS	0,33	0,15
PUH without PBS	0,20	0,10

13.3.2 Signal asymmetry

The value of asymmetry shall satisfy the following requirements when a disk is recorded at the optimum recording power P_o. See Figure 10.

$$-0{,}05 \leq [\,(I_{14H} + I_{14L})/2 - (I_{3H} + I_{3L})/2\,]/I_{14} \leq 0{,}15$$

where

$(I_{14H} + I_{14L}) / 2$ is the centre level of I_{14}

$(I_{3H} + I_{3L}) / 2$ is the centre level of I_3 .

13.3.3 Cross-track signal

The cross-track signal is derived from the HF signal when low pass filtered with a cut off frequency of 30 kHz when the light beam crosses the tracks. See Figure 11. The low pass filter is a 1st-order filter.

The cross-track signal shall meet the following requirements.

$I_T = I_H - I_L$

$I_T/I_H = 0{,}10$ min.

where I_H is the peak value of this signal and I_T is the peak-to-peak value.

13.4 Quality of signals

13.4.1 Jitter

Jitter is the standard deviation σ of the time variation of the digitized data passed through the equalizer. The jitter of the leading and the trailing edges is measured relative to the clock of the phase-lock loop and normalized by the Channel bit clock interval.

Jitter shall be less than 8,0 % of the Channel bit clock period, when measured according to Annex F.

13.4.2 Random errors

A row of an ECC Block (see clause 19) that has at least 1 byte in error constitutes a PI error. In any 8 consecutive ECC Blocks the total number of PI errors before correction shall not exceed 280.

13.4.3 Defects

The diameter of local defects shall meet the following requirements

- for air bubbles it shall not exceed 100 µm,
- for black spots causing birefringence it shall not exceed 200 µm,
- for black spots not causing birefringence it shall not exceed 300 µm.

© ISO/IEC 2005 — All rights reserved
Documents
Document Sharing Hub
Full document details: ISO IEC 23912-2005 (2006)

In addition, over a distance of 80 mm in scanning direction of tracks, the following requirements shall be met

- the total length of defects larger than 30 µm shall not exceed 300 µm,
- there shall be at most 6 such defects.

13.5 Servo signals

The output currents of the four quadrants of the quadrant photo detector shown in Figure 12 are identified by I_a, I_b, I_c and I_d.

13.5.1 Differential phase tracking error signal

The differential phase tracking error signal shall be derived from the phase difference between diagonal pairs of detectors elements when the light beam crosses the tracks: Phase (I_a + I_c) - Phase (I_b + I_d) , see Figure 13. The differential phase tracking error signal shall be low-pass filtered with a cut-off frequency of 30 kHz, see Annex C. This signal shall meet the following requirements, see Figure 13.

Amplitude

At the positive 0 crossing $\overline{\Delta t}$ /T shall be in the range 0,5 to 1,1 at 0,10 µm radial offset, where $\overline{\Delta t}$ is the average time difference derived from the phase difference between diagonal pairs of detector elements, and T is the Channel bit clock period.

Asymmetry

The asymmetry shall meet the following requirement, see Figure 13.

$$\frac{|T_1 - T_2|}{|T_1 + T_2|} \leq 0{,}2$$

where

- T_1 is the positive peak value of $\overline{\Delta t}$ / T,
- T_2 is the negative peak value of $\overline{\Delta t}$ / T.

13.5.2 Tangential push-pull signal

This signal shall be derived from the instantaneous level of the differential output (I_a + I_d) - (I_b + I_c). It shall meet the following requirement, see Figure 14.

$$0 \leq \frac{[(I_a + I_d) - (I_b + I_c)]_{pp}}{I_{14}} \leq 0{,}9$$

© ISO/IEC 2005 — All rights reserved

Documents
Document Sharing Hub
Full document details: ISO IEC 23912-2005 (2006)

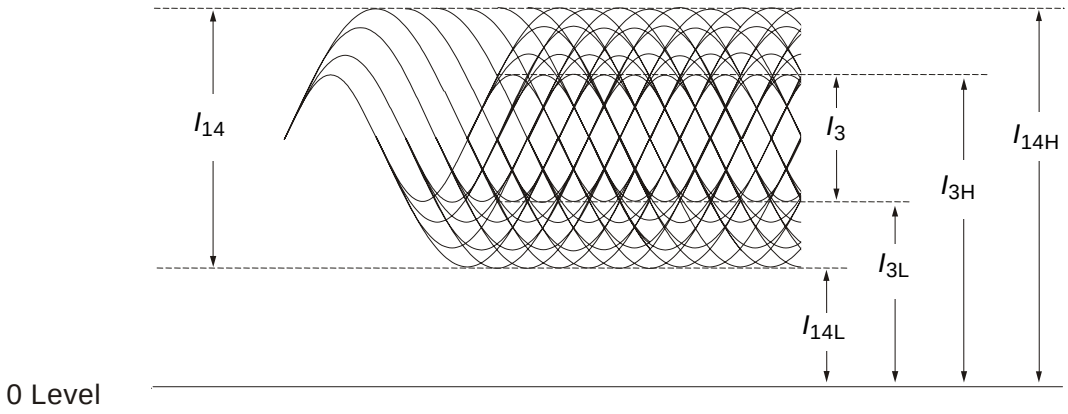

Figure 10 - Modulated amplitude

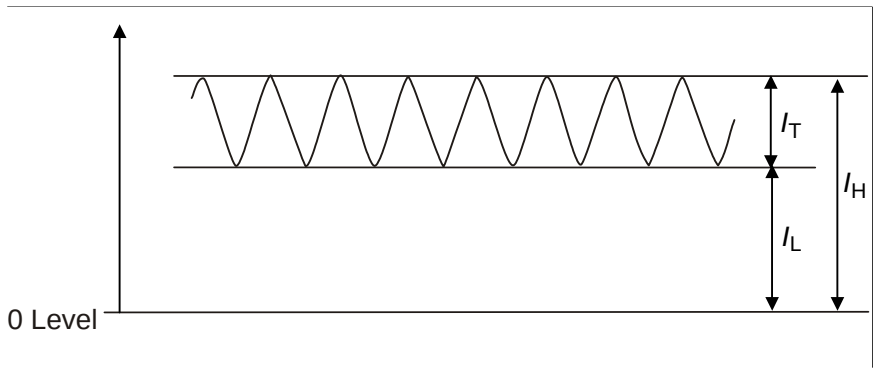

Figure 11 - Cross-track signal

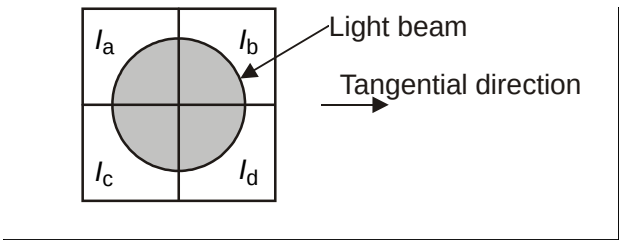

Figure 12 - Quadrant photo detector

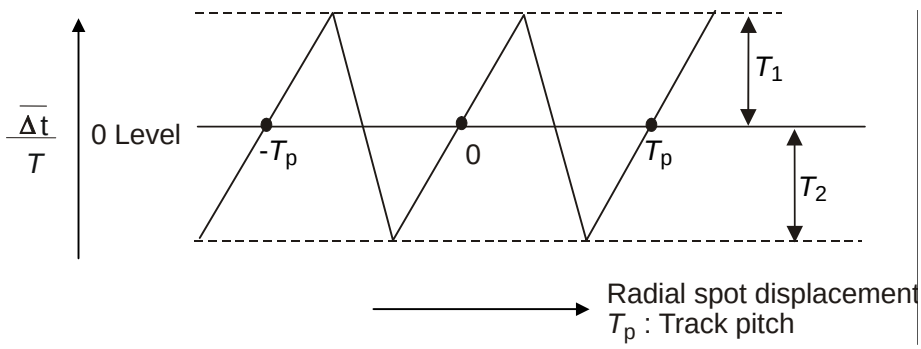

Figure 13 - Differential phase tracking error signal

© ISO/IEC 2005 — All rights reserved

Documents
Document Sharing Hub
Full document details: ISO IEC 23912-2005 (2006)

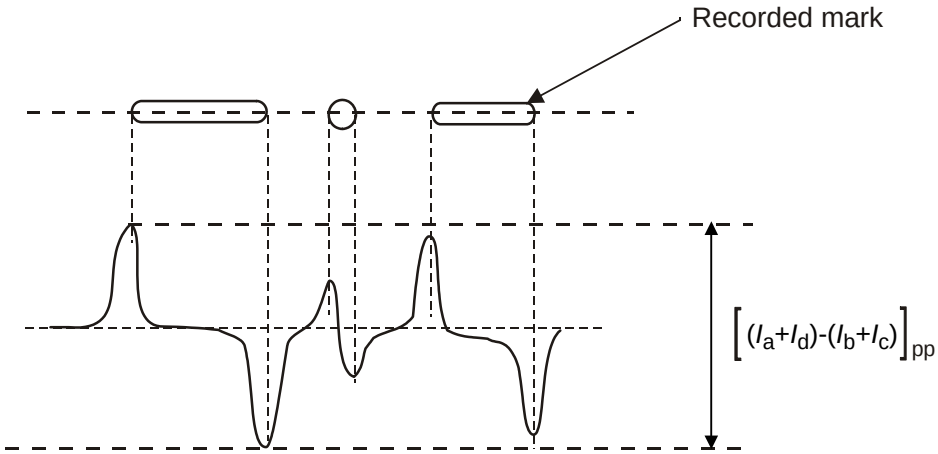

Figure 14 - Tangential push-pull signal

13.6 Groove wobble signal

The output current of each quadrant photo detector element of the PUH are I_a, I_b, I_c and I_d, see Figure 12.

The groove wobble signal is derived from the differential output when the light beam is following a track, and is $[(I_a + I_b) - (I_c + I_d)]$.

The groove wobble signal shall meet the following requirements.

The locking frequency for the groove wobble shall be 8 times the SYNC Frame frequency.

CNR of the groove wobble signal shall be greater than 31 dB (RBW = 1 kHz).

The CNR of the groove wobble signal shall be measured for the average value using a spectrum analyser where the Resolution Bandwidth (RBW) setting is 1 kHz, see Figure 15.

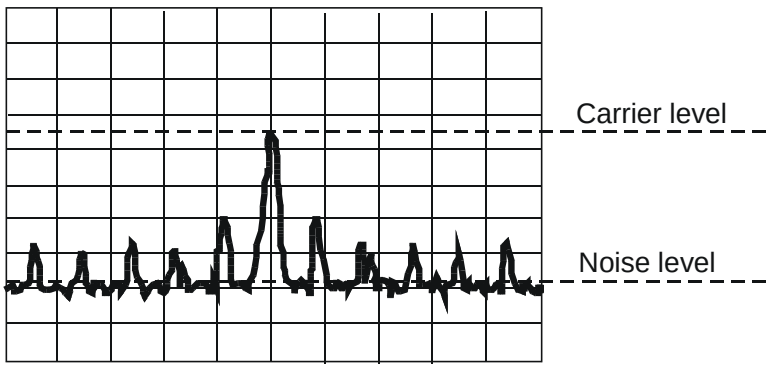

Figure 15 - Measurement of the wobble CNR

© ISO/IEC 2005 — All rights reserved

Documents
Document Sharing Hub
Full document details: ISO IEC 23912-2005 (2006)

14 Operational signals for the unrecorded disk

14.1 Measurement conditions

- The drive optical Pick-Up Head (PUH) for measurement of the unrecorded disk parameters and for making the recordings necessary for disk measurements shall be as specified in 9.1.2.
- The measurement conditions shall be as specified in 9.2.1 and 9.2.3.
- The normalized servo transfer function shall be as specified in 9.3.
- The reference servo for axial tracking shall be as specified in 9.4.
- The reference servo for radial tracking shall be as specified in 9.5.

14.2 Recording conditions

- General recording strategy : In groove
- Optimum recording power : Determined by OPC specified in Annex H
- Optimum recording power range of all disks : 6,0 mW $\leq P_o \leq$ 12,0 mW
- Bias power : $P_b \leq$ 0,7 mW
- Recording power window : $P_o \pm$ 0,25 mW

14.3 Basic write strategy for media testing

During the recordings necessary for disk measurements using the PUH specified in 9.1.2, the laser power shall be modulated according to the basic write strategy, see Figure 16.

Each write pulse of length 4T to 11T and 14T consists of two parts, a top pulse and a multiple-pulse train with T representing the length of one clock period.

The write pulse of length 3T uses the top pulse only.

The top pulse shall start after the leading edge of the recording data and shall end always 3T after this leading edge (with T representing the clock period). The top pulse width (T_{top}) shall be selected according to the recording data length (T_{wd}), as specified below.

The multiple-pulse train shall start 3T after the leading edge of the recording data and shall end at the trailing edge of the recording data. The pulse period of the multi-pulse train shall be T. Its width (T_{mp}) shall be independent of the recording data length.

Three sets of the recommended value of each parameter shall be as specified in Table 3.

Table 3 – Parameters for Basic Write Strategy

	T_{top}			T_{mp}
	T_{wd} = 3T	T_{wd} = 4T	T_{wd} ≥ 5T	
Type 1	1,55T	1,50T	1,55T	0,65T
Type 2	1,50T	1,50T	1,55T	0,65T
Type 3	1,25T	1,15T	1,15T	0,60T

© ISO/IEC 2005 — All rights reserved
Documents
Document Sharing Hub
Full document details: ISO IEC 23912-2005 (2006)

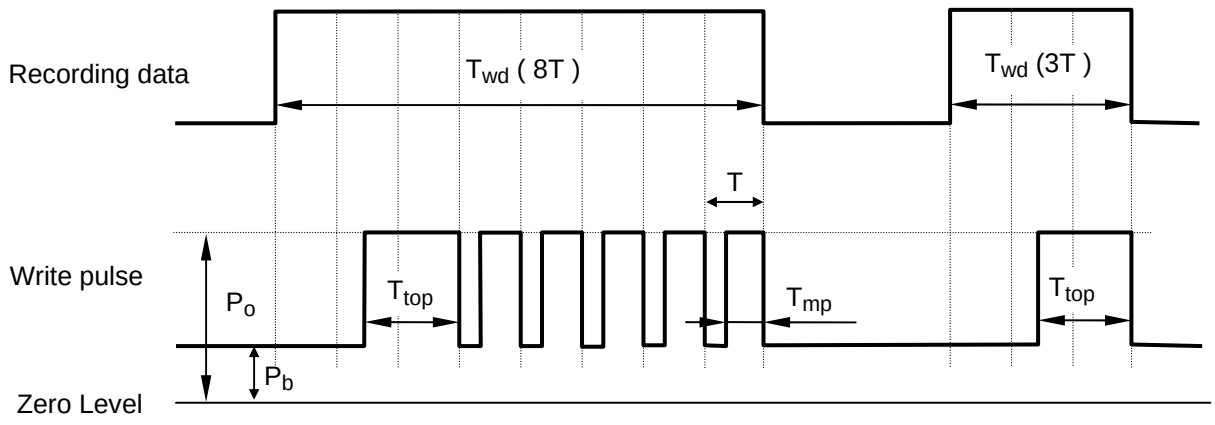

Figure 16 - Basic write strategy

See Annex N for options in write strategy.

14.3.1 Definition of the write pulse

The write pulse from the objective lens shall be as shown in Figure 17.

The rise times (T_r) and fall times (T_f) shall not exceed 3 ns.

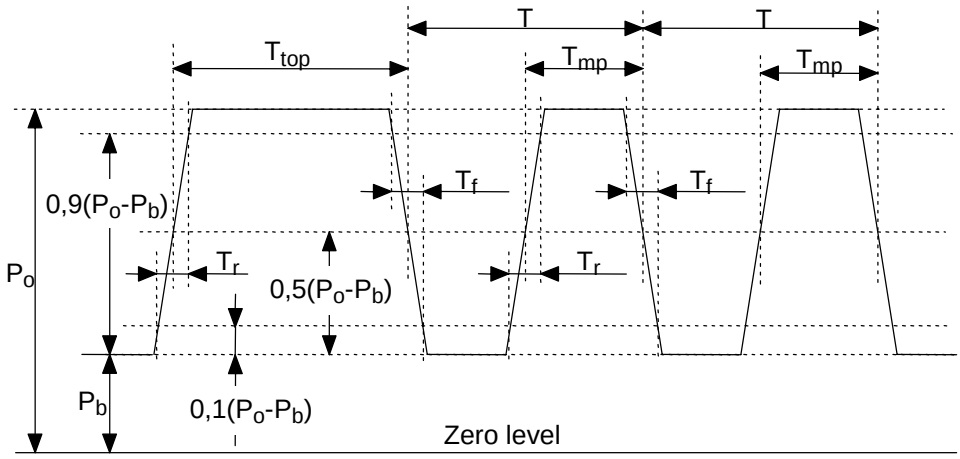

Figure 17 - Write pulse

14.4 Servo signals

The output currents of the four quadrants of the quadrant photo detector are I_a, I_b, I_c, and I_d, see Figure 18. The photo detector elements (I_a and I_b) are located at a greater radius than elements (I_c and I_d).

© ISO/IEC 2005 — All rights reserved

Documents
Document Sharing Hub
Full document details: ISO IEC 23912-2005 (2006)

14.4.1 Radial push-pull tracking error signal

The radial push-pull tracking error signal is derived from the differential output of the detector elements when the light beam crosses the tracks and shall be $[(I_a + I_b) - (I_c + I_d)]$. The radial push-pull tracking error signal shall be measured with the PUH specified in 9.1.2 before and after recording and is low pass filtered with a cut-off frequency 30 kHz.

The radial push-pull amplitude before recording (PPb) and after recording (PPa) shown in Figure 18 are defined as:

PPb, PPa = $|(I_a + I_b) - (I_c + I_d)|_{a.c.} / |(I_a + I_b + I_c + I_d)|_{d.c.}$

$|(I_a + I_b + I_c + I_d)|_{d.c}$ shall be measured from zero level to the average level of $|(I_a + I_b + I_c + I_d)|_{a.c}$ (see Figure 19).

The radial push-pull ratio (PPr) is defined as:

PPr = PPb / PPa.

The above parameters shall meet the following requirements.

- PPb signal amplitude : 0,22 < PPb < 0,44
- Push Pull ratio : 0,5 < PPr < 1,0
- Variation in PPb signal : ΔPPb < 15 %

where ΔPPb = [(PPb) max. - (PPb) min.] / [(PPb) max. + (PPb) min.]

- ΔPPb shall be measured over the entire disk surface (from 22,0 to 38,5 mm for 80mm disk and to 58,5 mm for 120mm disk).

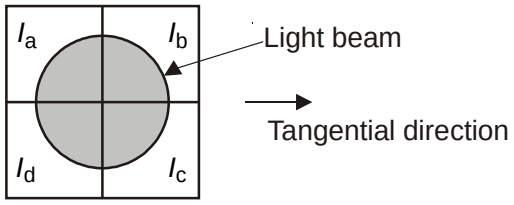

Figure 18 - Quadrant photo detector

© ISO/IEC 2005 — All rights reserved
Documents
Document Sharing Hub
Full document details: ISO IEC 23912-2005 (2006)

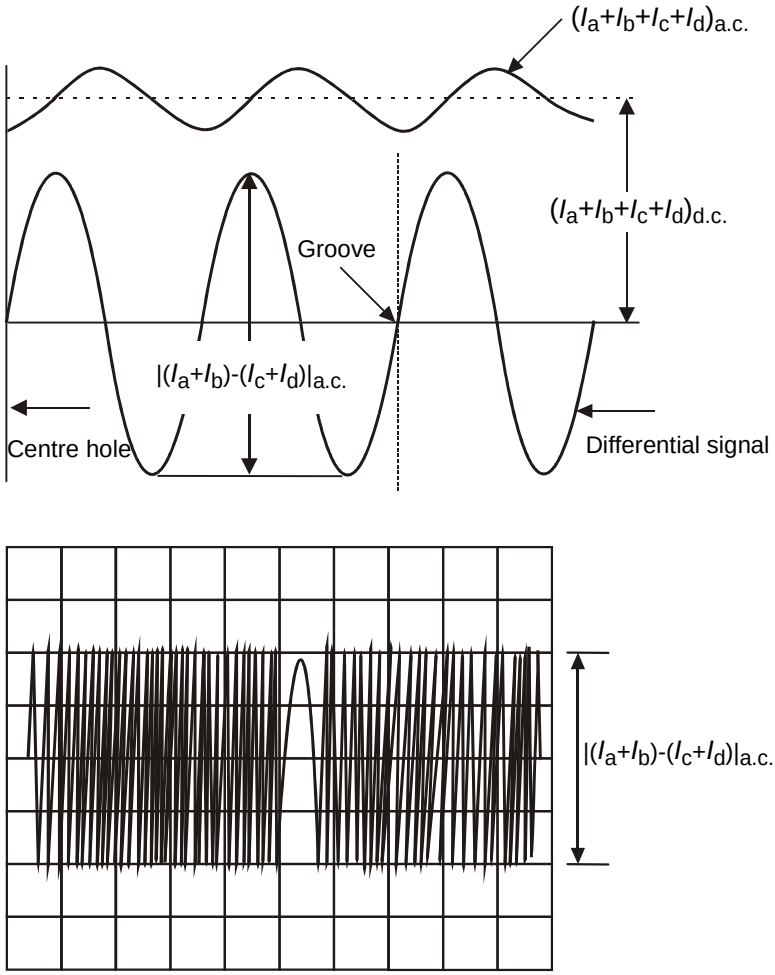

Figure 19 - Radial push-pull tracking error signal

14.4.2 Defects

The requirements shall be as specified in 13.4.3.

14.5 Addressing signals

The output currents of the four quadrants of the split photo detector are I_a, I_b, I_c and I_d as shown in Figure 18.

14.5.1 Land Pre-Pit signal

The Land Pre-Pit signal is derived from the instantaneous level of the differential output when the light beam is following a track and shall be $[(I_a + I_b) - (I_c + I_d)]$. This differential signal shall be measured by the PUH specified in 9.1.2 before and after recording.

The Land Pre-Pit signal amplitude before recording (LPPb) shall be defined as:

$$\text{LPPb} = \left|(I_a + I_b) - (I_c + I_d)\right|_{o\text{-}p} / \left|(I_a + I_b + I_c + I_d)\right|_{d.c.}$$

See Figure 19 and 20.

$\left|(I_a + I_b) - (I_c + I_d)\right|_{o\text{-}p}$ shall be measured at the average point of maximum and minimum signals and the bandwidth of the photo-detector amplifiers shall be higher than 20 MHz.

© ISO/IEC 2005 — All rights reserved

Documents
Document Sharing Hub
Full document details: ISO IEC 23912-2005 (2006)

$|(I_a + I_b + I_c + I_d)|_{d.c.}$ shall be measured when the light beam is following a track and shall be low pass filtered with a cut-off frequency of 30 kHz.

The aperture ratio of the Land Pre-Pit after recording (AR) shall be defined as:

AR=APmin. / APmax.

APmin. and APmax. are the minimum and the maximum values of the Land Pre-Pit signal amplitude AP = $|(I_a + I_b) - (I_c + I_d)|$ without the wobble amplitude.

See Figure 20 and Annex P.

The above parameters shall meet the following requirements.

- Signal amplitude before recording : 0,18 < LPPb < 0,28
- Aperture ratio after recording : AR > 15 %
- Block error ratio before recording : BLERb < 3 %
- Block error ratio after recording : BLERa < 5 %

The Half Maximum Full Width of LPPb signal shall be larger than 1T.

The Land Pre-Pit on the outer side of the track shall be detected when the laser beam is following the track.

For the measurement of the Block error ratio of the Land Pre-Pit data, the parity A errors before error correction shall be measured over 1000 ECC Blocks.

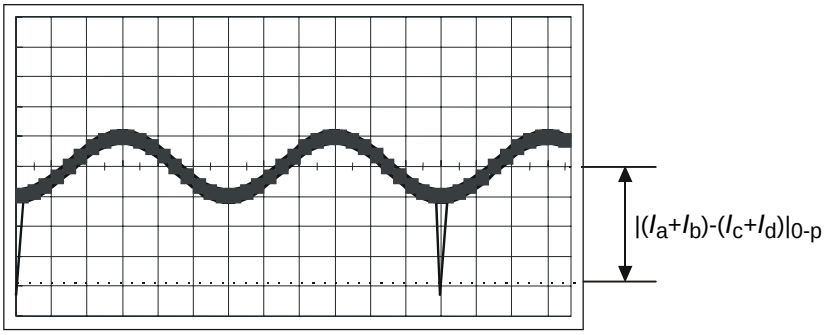

(a) Before recording for measuring LPPb

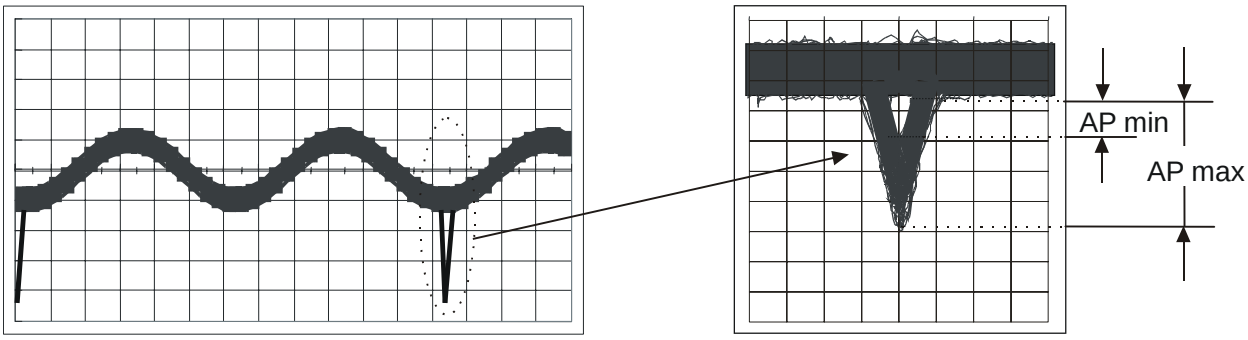

(b) After recording for measuring AR

Figure 20 - Land Pre-Pit signal

© ISO/IEC 2005 — All rights reserved
Documents
Document Sharing Hub
Full document details: ISO IEC 23912-2005 (2006)

14.5.2 Groove wobble signal

The groove wobble signal is derived from the differential output when the light beam is following a track, and is $[(I_a + I_b) - (I_c + I_d)]$. The groove wobble signal shall be measured by the PUH specified in 9.1.2 before and after recording.

The groove wobble signal amplitudes before recording (WOb) and after recording (WOa) are defined as:

WOb, WOa = $[(I_a + I_b) - (I_c + I_d)]_{p\text{-}p}$

The above parameters shall meet the following requirements.

The locking frequency for the groove wobble shall be 8 times the SYNC Frame frequency.

See clause 21.

CNR of WOb shall be greater than 35 dB (RBW = 1 kHz)

CNR of WOa shall be greater than 31 dB (RBW = 1 kHz)

The CNR of WOb and WOa shall be measured for the average value using a spectrum analyser where the Resolution Bandwidth (RBW) setting is 1 kHz, see Figure 21.

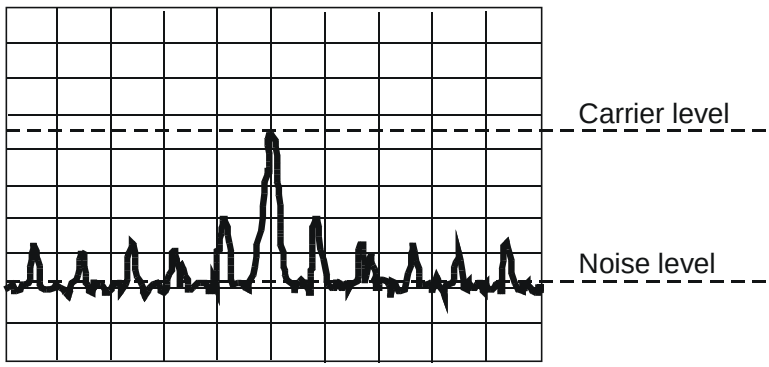

Figure 21 - Measurement of the wobble CNR

The normalized Wobble signal (NWO) is defined to derive the wobble amplitude in nanometres.

NWO = WOb / RPS and its value shall be 0,06 < NWO < 0,12 where RPS is the peak to peak value of the radial push-pull signal $[(I_a + I_b) - (I_c + I_d)]$ before recording, when the light spot crosses the tracks and is low pass filtered with a cut-off frequency 30 kHz.

14.5.3 Relation in phase between wobble and Land Pre-Pit

The groove wobble signal and Land Pre-Pit signal are derived from the differential output currents $[(I_a + I_b) - (I_c + I_d)]$. Therefore, when the photo detector elements (I_a, I_b) are located at the outer side of the disk and groove wobble is regarded as a sine wave, the relation in phase between groove wobble and Land Pre-Pit (PWP) shall meet the following requirement.

PWP = -90° ± 10°

The PWP value shall be measured as the phase difference between the largest amplitude point of the LPP signal and the averaged zero crossing point of the wobble, see Figure 22.

The PWP value shall be measured before recording.

© ISO/IEC 2005 — All rights reserved

Documents
Document Sharing Hub
Full document details: ISO IEC 23912-2005 (2006)

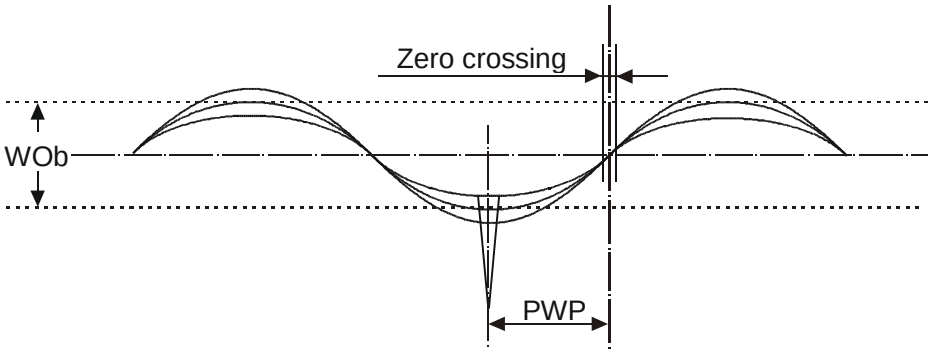

Figure 22 - Relation in phase between wobble and Land Pre-Pit

© ISO/IEC 2005 — All rights reserved
Documents
Document Sharing Hub
Full document details: ISO IEC 23912-2005 (2006)