INTERNATIONAL STANDARD

ISO/IEC 8802-5

ANSI/IEEE Std 802.5

Third edition
1998-09-15

AMENDMENT 1
1998-09-15

Information technology — Telecommunications and information exchange between systems — Local and metropolitan area networks — Specific requirements —

Part 5:
Token ring access method and physical layer specifications

AMENDMENT 1: Dedicated token ring operation and fibre optic media

Technologies de l'information — Télécommunications et échange d'information entre systèmes — Réseaux locaux et urbains — Exigences spécifiques —

Partie 5: Méthode d'accès par anneau à jeton et spécifications pour la couche physique

AMENDEMENT 1: Opération par dédicace d'anneau à jeton et milieux en fibres optiques

Reference number
ISO/IEC 8802-5:1998/Amd.1:1998(E)
ANSI/IEEE
Std 802.5r and 802.5j, 1998 edition

AVA Documents
Document Sharing Hub

Full document details: ISO_IEC 8802-5_1998_AMD1_1998

International Standard ISO/IEC 8802-5:1998/Amd.1:1998(E)

ISO (the International Organization for Standardization) and IEC (the International Electrotechnical Commission) form the specialized system for worldwide standardization. National bodies that are members of ISO or IEC participate in the development of International Standards through technical committees established by the respective organization to deal with particular fields of technical activity. ISO and IEC technical committees collaborate in fields of mutual interest. Other international organizations, governmental and non-governmental, in liaison with ISO and IEC, also take part in the work.

In the field of information technology, ISO and IEC have established a joint technical committee, ISO/IEC JTC 1. Draft International Standards adopted by the joint technical committee are circulated to national bodies for voting. Publication as an International Standard requires approval by at least 75 % of the national bodies casting a vote.

Amendment 1 to ISO/IEC 8802-5:1998 was prepared by Joint Technical Committee ISO/IEC JTC 1, *Information technology*, Subcommittee SC 6, *Telecommunications and information exchange between systems*.

International Organization for Standardization/International Electrotechnical Commission
Case postale 56 • CH-1211 Genève 20 • Switzerland

Documents
Document Sharing Hub
Full document details: ISO_IEC 8802-5_1998_AMD1_1998

ISO/IEC 8802-5 : 1998/Amd. 1: 1998
ANSI/IEEE Std 802.5r-1997 and 802.5j-1997, 1998 Edition
(Supplements to ANSI/IEEE Std 802.5, 1998 Edition)

Information technology— Telecommunications and information exchange between systems— Local and metropolitan area networks— Specific requirements—

Part 5: Token ring access method and physical layer specifications

Amendment 1: Dedicated token ring operation and fibre optic media

Sponsor

LAN MAN Standards Committee
of the
IEEE Computer Society

Documents
Document Sharing Hub

Full document details: ISO_IEC 8802-5_1998_AMD1_1998

Abstract: This amendment to Local and Metropolitan Area Network standard, ISO/IEC 8802-5 : 1998, is part of a family of local area network (LAN) standards dealing with the physical and data link layers as defined by the ISO/IEC Open Systems Interconnection Basic Reference Model. The requirements for dedicated token ring (DTR) operation are specified, including the changes and additions to the Medium Access Control (MAC) layer to provide for an additional full-duplex mode of operation (switching), and for interconnection of shared LAN segments to switch ports. Also specified are the characteristics of a fibre optic interface for connecting a 4 Mbit/s or 16 Mbit/s token ring station to the trunk coupling unit (TCU) of a token ring, including station, port, and channel requirements. Fibre optic trunk signaling recommendations are also made.
Keywords: data processing interconnection, dedicated token ring, fibre optic media, full duplex operation, insertion key, local area network (LAN), medium access control (MAC), token ring

---

The Institute of Electrical and Electronics Engineers, Inc.
345 East 47th Street, New York, NY 10017-2394, USA

Copyright © 1998 by the Institute of Electrical and Electronics Engineers, Inc.
All rights reserved. Published 1998. This printing is by the International Organization for Standardization with special permission of the Institute of Electrical and Electronics Engineers, Inc. Printed in Geneva, Switzerland.

ISBN 0-7381-0236-9

No part of this publication may be reproduced in any form, in an electronic retrieval system or otherwise, without the prior written permission of the publisher.

Documents
Document Sharing Hub

Full document details: ISO_IEC 8802-5_1998_AMD1_1998

Foreword to ISO/IEC 8802-5 : 1998/Amd. 1: 1998

This International Standard is part of a family of International Standards for Local and Metropolitan Area Networks. The relationship between this International Standard and the other members of the family is shown below. (The numbers in the figure refer to ISO/IEC Standard numbers.)

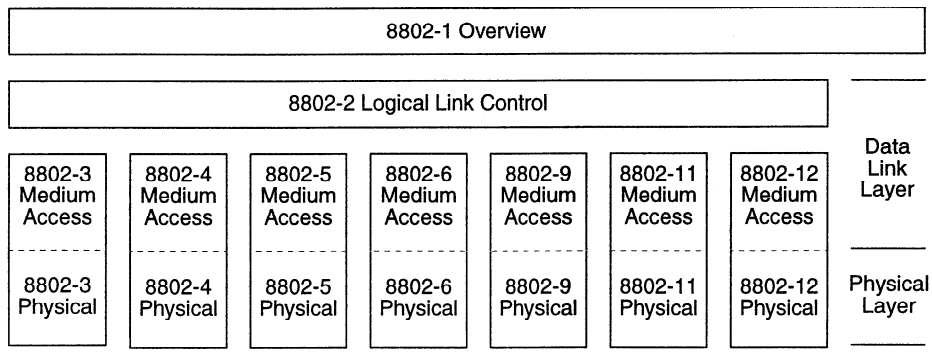

This family of International Standards deals with the Physical and Data Link layers as defined by the ISO/IEC Open Systems Interconnection (OSI) Basic Reference Model (ISO/IEC 7498-1 : 1994). The access standards define seven types of medium access technologies and associated physical media, each appropriate for particular applications or system objectives. Other types are under investigation.

The International Standards defining the access technologies are as follows:

a) ISO/IEC 8802-3, utilizing carrier sense multiple access with collision detection (CSMA/CD) as the access method.
b) ISO/IEC 8802-4, utilizing token passing bus as the access method.
c) ISO/IEC 8802-5, utilizing token passing ring as the access method.
d) ISO/IEC 8802-6, utilizing distributed queuing dual bus as the access method.
e) ISO/IEC 8802-9, a unified access method offering integrated services for backbone networks.
f) ISO/IEC DIS 8802-11, a wireless LAN utilizing carrier sense multiple access with collision avoidance (CSMA/CA) as the access method.
g) ISO/IEC DIS 8802-12, utilizing Demand Priority as the access method.

ISO/IEC TR 8802-1, *Overview of Local Area Network Standards*, provides an overview of the series of ISO/IEC 8802 standards.

ISO/IEC 8802-2, *Logical Link Control*, is used in conjunction with the medium access standards to provide the data link layer service to network layer protocols.

ISO/IEC 15802-1, *Medium Access Control (MAC) service definition*, specifies the characteristics of the common MAC Service provided by all IEEE 802 LAN MACs. The service is defined in terms of primitives that can be passed between peer service users, their parameters, their interrelationship and valid sequences, and the associated events of the service.

ISO/IEC 15802-2, *LAN/MAN Management*, defines an OSI management-compatible architecture, and services and protocol elements for use in a LAN/MAN environment for performing remote management.

ISO/IEC 10038, *Media Access Control (MAC) bridges*, specifies an architecture and protocol for the interconnection of IEEE 802 LANs below the level of the logical link control protocol (to be renumbered 15802-3).

ISO/IEC 15802-4, *System Load Protocol*, specifies a set of services and protocol for those aspects of management concerned with the loading of systems on IEEE 802 LANs.

ISO/IEC 15802-5, *Remote Media Access Control (MAC) bridging*, specifies extensions for the interconnection, using non-LAN communication technologies, of geographically separated IEEE 802 LANs below the level of the logical link control protocol.

Copyright © 1998 IEEE. All rights reserved.

Documents
Document Sharing Hub

Full document details: ISO_IEC 8802-5_1998_AMD1_1998

ANSI/IEEE Std 802.5r-1997 and 802.5j-1997, 1998 Edition

IEEE Standards documents are developed within the IEEE Societies and the Standards Coordinating Committees of the IEEE Standards Association (IEEE-SA) Standards Board. Members of the committees serve voluntarily and without compensation. They are not necessarily members of the Institute. The standards developed within IEEE represent a consensus of the broad expertise on the subject within the Institute as well as those activities outside of IEEE that have expressed an interest in participating in the development of the standard.

Use of an IEEE Standard is wholly voluntary. The existence of an IEEE Standard does not imply that there are no other ways to produce, test, measure, purchase, market, or provide other goods and services related to the scope of the IEEE Standard. Furthermore, the viewpoint expressed at the time a standard is approved and issued is subject to change brought about through developments in the state of the art and comments received from users of the standard. Every IEEE Standard is subjected to review at least every five years for revision or reaffirmation. When a document is more than five years old and has not been reaffirmed, it is reasonable to conclude that its contents, although still of some value, do not wholly reflect the present state of the art. Users are cautioned to check to determine that they have the latest edition of any IEEE Standard.

Comments for revision of IEEE Standards are welcome from any interested party, regardless of membership affiliation with IEEE. Suggestions for changes in documents should be in the form of a proposed change of text, together with appropriate supporting comments.

Interpretations: Occasionally questions may arise regarding the meaning of portions of standards as they relate to specific applications. When the need for interpretations is brought to the attention of IEEE, the Institute will initiate action to prepare appropriate responses. Since IEEE Standards represent a consensus of all concerned interests, it is important to ensure that any interpretation has also received the concurrence of a balance of interests. For this reason, IEEE and the members of its societies and Standards Coordinating Committees are not able to provide an instant response to interpretation requests except in those cases where the matter has previously received formal consideration.

Comments on standards and requests for interpretations should be addressed to:

Secretary, IEEE-SA Standards Board
445 Hoes Lane
P.O. Box 1331
Piscataway, NJ 08855-1331
USA

Note: Attention is called to the possibility that implementation of this standard may require use of subject matter covered by patent rights. By publication of this standard, no position is taken with respect to the existence or validity of any patent rights in connection therewith. The IEEE shall not be responsible for identifying patents for which a license may be required by an IEEE standard or for conducting inquiries into the legal validity or scope of those patents that are brought to its attention.

Authorization to photocopy portions of any individual standard for internal or personal use is granted by the Institute of Electrical and Electronics Engineers, Inc., provided that the appropriate fee is paid to Copyright Clearance Center. To arrange for payment of licensing fee, please contact Copyright Clearance Center, Customer Service, 222 Rosewood Drive, Danvers, MA 01923 USA; (978) 750-8400. Permission to photocopy portions of any individual standard for educational classroom use can also be obtained through the Copyright Clearance Center.

Copyright © 1998 IEEE. All rights reserved.

Documents
Document Sharing Hub

Full document details: ISO_IEC 8802-5_1998_AMD1_1998

Introduction to ANSI/IEEE Std 802.5r-1997 and 802.5j-1997, 1998 Edition

(This introduction is not a part of ANSI/IEEE Stds 802.5r-1997 and 802.5j-1997, or of ISO/IEC 8802-5 : 1998/Amd. 1: 1998.)

This standard is part of a family of standards for local and metropolitan area networks. The relationship between the standard and other members of the family is shown below. (The numbers in the figure refer to IEEE standard numbers.)

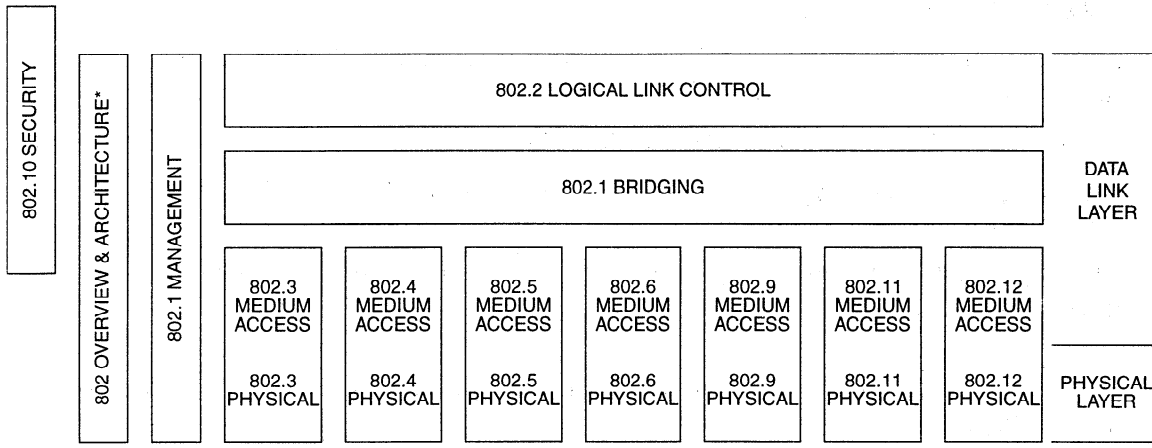

* Formerly IEEE Std 802.1A.

This family of standards deals with the Physical and Data Link layers as defined by the International Organization for Standardization (ISO) Open Systems Interconnection (OSI) Basic Reference Model (ISO/IEC 7498-1 : 1994). The access standards define seven types of medium access technologies and associated physical media, each appropriate for particular applications or system objectives. Other types are under investigation.

The standards defining the technologies noted above are as follows:

- IEEE Std 802 — *Overview and Architecture.* This standard provides an overview to the family of IEEE 802 Standards.
- ANSI/IEEE Std 802.1B and 802.1k [ISO/IEC 15802-2] — *LAN/MAN Management.* Defines an OSI management-compatible architecture, and services and protocol elements for use in a LAN/MAN environment for performing remote management.
- ANSI/IEEE Std 802.1D [ISO/IEC 10038] — *Media Access Control (MAC) Bridges.* Specifies an architecture and protocol for the interconnection of IEEE 802 LANs below the MAC service boundary.
- ANSI/IEEE Std 802.1E [ISO/IEC 15802-4] — *System Load Protocol.* Specifies a set of services and protocol for those aspects of management concerned with the loading of systems on IEEE 802 LANs.
- ANSI/IEEE Std 802.1F — *Common Definitions and Procedures for IEEE 802 Management Information*
- ANSI/IEEE Std 802.1G [ISO/IEC 15802-5] — *Remote Media Access Control (MAC) Bridging*. Specifies extensions for the interconnection, using non-LAN communication technologies, of geographically separated IEEE 802 LANs below the level of the logical link control protocol.
- ANSI/IEEE Std 802.2 [ISO/IEC 8802-2] — *Logical Link Control*

Copyright © 1998 IEEE. All rights reserved.

Documents
Document Sharing Hub

Full document details: ISO_IEC 8802-5_1998_AMD1_1998

- ANSI/IEEE Std 802.3 [ISO/IEC 8802-3] — *CSMA/CD Access Method and Physical Layer Specifications*
- ANSI/IEEE Std 802.4 [ISO/IEC 8802-4] — *Token Passing Bus Access Method and Physical Layer Specifications*
- ANSI/IEEE Std 802.5 [ISO/IEC 8802-5] — *Token Ring Access Method and Physical Layer Specifications*
- ANSI/IEEE Std 802.6 [ISO/IEC 8802-6] — *Distributed Queue Dual Bus Access Method and Physical Layer Specifications*
- ANSI/IEEE Std 802.9 [ISO/IEC 8802-9] — *Integrated Services (IS) LAN Interface at the Medium Access Control (MAC) and Physical (PHY) Layers*
- ANSI/IEEE Std 802.10 — *Interoperable LAN/MAN Security*
- ANSI/IEEE Std 802.11 [ISO/IEC DIS 8802-11] — *Wireless LAN Medium Access Control (MAC) and Physical Layer Specifications*
- ANSI/IEEE Std 802.12 [ISO/IEC DIS 8802-12] — *Demand Priority Access Method, Physical Layer and Repeater Specifications*

In addition to the family of standards, the following is a recommended practice for a common Physical Layer technology:

- IEEE Std 802.7 — *IEEE Recommended Practice for Broadband Local Area Networks*

The following additional working group has authorized standards projects under development:

- IEEE 802.14 — *Standard Protocol for Cable-TV Based Broadband Communication Network*

Conformance test methodology

An additional standards series, identified by the number 1802, has been established to identify the conformance test methodology documents for the 802 family of standards. Thus the conformance test documents for 802.3 are numbered 1802.3.

ANSI/IEEE Std 802.5r-1997 and 802.5j-1997, 1998 Edition [ISO/IEC 8802-5 : 1998/ Amd. 1: 1998]

This amendment to the IEEE 802.5 token ring standard extends the capability of token ring by defining and specifying dedicated token ring operation, a new class of token ring adapters that can operate in full duplex mode, and a new C-Port for attachment of stations to the LAN. This standard provides for the interconnection of shared and dedicated token ring LAN segments via the newly defined C-Port. Full backward and forward compatibility of hardware is provided for, with newly defined C-Ports able to detect and interoperate with both legacy token ring adapters, and with adapters designed to this new standard. Additionally, the newly defined adapters can operate in full duplex mode when connected to a C-Port, and can operate in classic or shared mode when attached to a shared concentrator port as defined in the base standard.

This amendment also defines operation over fibre optic media, upgrading the "Trial Use" optical fibre standard to full-use status. Also described are recommendations for fibre trunk interconnection.

Copyright © 1998 IEEE. All rights reserved.

Documents
Document Sharing Hub

Full document details: ISO_IEC 8802-5_1998_AMD1_1998

Participants

The following is a list of those who were members of the IEEE 802.5 Working Group when IEEE Std 802.5r-1997 was approved:

Robert D. Love, *Chair and Editor-in-Chief*
Jim Carlo, *Technical Editor*
Neil Jarvis, *Technical Editor*
Michael Siegel, *Technical Editor*
Kenneth T. Wilson, *Technical Editor*

Jeremy Curtis
William Douglass
Paul Gessert
Martin Gurthrie
Sharam Hakimi
Michael Hanrahan
Ivar Jeppesen
Allen Kasey
Ken Kutzler
George Lin
Joseph Mazor
Kelly P. McClellan
John Messenger
John E. Montague
Ivan Oakley
Syou-Chin Peng
Kirk Preiss
Bob Ross
Tony Rowell
Bill Sarles
Steve Scandalis
Showi-min Shen
Kevin G. Smith
Trevor Warwick
David W. Wilson
Edward C. Wong

The following persons were on the balloting committee of IEEE Std 802.5r-1997:

William B. Adams
Don Aelmore
Paul D. Amer
Jack S. Andresen
Frederic Bauchot
Manuel J. Betancor*
Kathleen L. Briggs
Peter K. Campbell
James T. Carlo
David E. Carlson
Alan M. Chambers
Robert S. Crowder
Christos Douligeris
Sourav K. Dutta
Paul S. Eastman
Philip H. Enslow
Changxin Fan
John W. Fendrich
Mark R. M. Ferguson
Harvey A. Freeman
Robert J. Gagliano
Gautam Garai
Julio Gonzalez Sanz
Martin Guthrie
Kenneth C. Heck
Richard J. Iliff
Neil A. Jarvis
Henry D. Keen
Peter M. Kelly
Gary C. Kessler
Yongbum Kim
Henrieous Koeman
Stephen Barton Kruger
William G. Lane
Lanse M. Leach
Walter Levy
Randolph S. Little
Robert D. Love
Bennett Meyer
Richard H. Miller
David S. Millman
Warren Monroe
John E. Montague
David J. Morris
Wayne D. Moyers
Charles Oestereicher
Joerg Ottensmeyer
Roger Pandanda
Ronald C. Petersen
Thomas L. Phinney
Vikram Punj
Ivan Reede
John P. Riganati
Edouard Y. Rocher
James W. Romlein
Floyd E. Ross
Michael Salzman
Stephen Scandalis
Norman Schneidewind
Rich Seifert
Lee A. Sendelbach
Donald A. Sheppard
Joseph S. Skorupa
Fred J. Strauss
Efstathios D. Sykas
Patricia Thaler
Geoffrey O. Thompson
Robert C. Tripi
Mark-Rene Uchida
James Vorhies
Yun-Che Wang
Raymond P. Wenig
Paul A. Willis
David W. Wilson
Qian-li Yang

*Deceased

Copyright © 1998 IEEE. All rights reserved.

Documents
Document Sharing Hub
Full document details: ISO_IEC 8802-5_1998_AMD1_1998

Participants

The following is a list of those who were members of the IEEE 802.5 Working Group when IEEE Std 802.5j-1997 was approved:

Robert D. Love, *Chair*
Paul Gessert, *Technical Editor*

Jim Carlo
Jeremy Curtis
William Douglass
Martin Gurthrie
Sharam Hakimi
Michael Hanrahan
Neil Jarvis
Ivar Jeppesen
Allen Kasey
Ken Kutzler
George Lin
Joseph Mazor
Kelly P. McClellan
John Messenger
John E. Montague
Ivan Oakley
Syou-Chin Peng
Kirk Preiss
Bob Ross
Tony Rowell
Bill Sarles
Steve Scandalis
Showi-min Shen
Michael Siegel
Kevin G. Smith
Trevor Warwick
David W. Wilson
Kenneth T. Wilson
Edward C. Wong

The following persons were on the balloting committee of IEEE Std 802.5j-1997:

William B. Adams
Don Aelmore
Jack S. Andresen
Kit Athul
William E. Ayen
Frederic Bauchot
J. Paul Benson, Jr.
Kathleen L. Briggs
Peter K. Campbell
James T. Carlo
David E. Carlson
Robert S. Crowder
Christos Douligeris
Sourav K. Dutta
Paul S. Eastman
Changxin Fan
John W. Fendrich
Harvey A. Freeman
Robert J. Gagliano
Gautam Garai
Paul Gessert
Julio Gonzalez Sanz
Martin Guthrie
Delon Hanson
Kenneth C. Heck
Richard J. Iliff
Neil A. Jarvis
Peter M. Kelly
Gary C. Kessler
Yongbum Kim
Stephen Barton Kruger
Lanse M. Leach
Walter Levy
Randolph S. Little
Robert D. Love
Bennett Meyer
Richard H. Miller
David S. Millman
Warren Monroe
John E. Montague
David J. Morris
James R. Moulton
Wayne D. Moyers
Charles Oestereicher
Roger Pandanda
Lucy W. Person
Ronald C. Petersen
Thomas L. Phinney
Ivan Reede
Edouard Y. Rocher
James W. Romlein
Floyd E. Ross
Michael Salzman
F. Williams Sarles
Stephen Scandalis
Norman Schneidewind
Lee A. Sendelbach
Donald A. Sheppard
Joseph S. Skorupa
Rosemary Slager
Fred J. Strauss
Efstathios D. Sykas
Geoffrey O. Thompson
Robert C. Tripi
Mark-Rene Uchida
Emmanuel Van Lil
James Vorhies
Yun-Che Wang
Raymond P. Wenig
Paul A. Willis
David W. Wilson
Qian-li Yang

Copyright © 1998 IEEE. All rights reserved.
AVA Documents
Document Sharing Hub
Full document details: ISO_IEC 8802-5_1998_AMD1_1998

When the IEEE Standards Board approved IEEE Std 802.5r and IEEE Std 802.5j on 16 September 1997, it had the following membership:

Donald C. Loughry, *Chair* **Richard J. Holleman,** *Vice Chair*
Andrew G. Salem, *Secretary*

Clyde R. Camp
Stephen L. Diamond
Harold E. Epstein
Donald C. Fleckenstein
Jay Forster†
Thomas F. Garrity
Donald N. Heirman
Jim Isaak
Ben C. Johnson
Lowell Johnson
Robert Kennelly
E. G. "Al" Kiener
Joseph L. Koepfinger†
Stephen R. Lambert
Lawrence V. McCall
L. Bruce McClung
Marco W. Migliaro
Louis-François Pau
Gerald H. Peterson
John W. Pope
Jose R. Ramos
Ronald H. Reimer
Ingo Rüsch
John S. Ryan
Chee Kiow Tan
Howard L. Wolfman

†Member Emeritus

Also included are the following nonvoting IEEE Standards Board liaisons:

Satish K. Aggarwal
Alan H. Cookson

Kristin Dittmann
IEEE Standards Project Editor

IEEE Std 802.5r-1997 was approved by the American National Standards Institute on 2 June 1998. IEEE Std 802.5j-1997 was approved by the American National Standards Institute on 15 April 1998.

Copyright © 1998 IEEE. All rights reserved.

AVA Documents
Document Sharing Hub

Full document details: ISO_IEC 8802-5_1998_AMD1_1998

Contents

1. Changes to clauses 1 and 2 of ISO/IEC 8802-5 : 1998 1

1.1 Scope 1
1.2 Normative references 2
1.3 Definitions 3
1.5 Abbreviations and acronyms 5
1.6 Conformance requirements—classic station 6
1.7 Conformance requirements—classic concentrator 6
1.8 DTR conformance requirements 6
1.9 Fibre optic media conformance requirements 11

2.5 Physical structure of a DTR network 12
2.6 Station and C-Port operating modes 14

9. Dedicated token ring (DTR) 16

9.1 DTR TXI and TKP access protocol support 18
9.2 Station TXI access protocol specification 39
9.3 C-Port join and TXI access protocol specification 72
9.4 C-Port in Port mode TKP access protocol specification 102
9.5 C-Port Station Emulation mode TKP access protocol specification 135
9.6 DTR Station TKP access protocol specification 174
9.7 C-Port specific components and specifications 196

10. DTR formats and facilities 200

10.1 Formats 200
10.2 Field descriptions 200
10.3 MAC frames 202
10.4 System timers 218
10.5 Policy flags and variables 223
10.6 Error counters 227

11. DTR Station and C-Port management 229

11.1 DTR Station management 229
11.2 C-Port management 240
11.3 Management information definitions 252

12. DTU interface 281

12.1 DTU—PMAC interface service specification 281

13. Fibre optic media 285

13.1 Clause numbering 285
13.2 Overview 285
13.7 Station attachment specifications 286

Annex 13.A (normative) Alternate fibres 294
Annex 13.B (informative) FOTCU trunk signaling recommendations 295

Copyright © 1998 IEEE. All rights reserved.

AVA Documents
Document Sharing Hub

Full document details: ISO_IEC 8802-5_1998_AMD1_1998

Annexes

A.5 Major capabilities 298
A.10 PICS proforma for DTR Station using the TXI access protocol—DTRSTXI::M 301
A.11 PICS proforma for DTR Station using the TKP access protocol DTRSTKP::M 305
A.12 PICS proforma for C-Port in Port mode using the TXI access protocol DTRPTXI::M 307
A.13 PICS proforma for C-Port in Port mode using the TKP access protocol DTRPTKP::M 310
A.14 PICS proforma for DTR C-Port in Station Emulation mode using the TXI access protocol—DTRPSETXI::M 311
A.15 PICS proforma for C-Port operating in Station Emulation mode using the TKP access protocol DTRPSETKP::M 313

Annex K (informative) DTR concentrator functional description 316

Annex L (informative) DTR Station and C-Port in Station Emulation mode using the TXI access protocol—Join, Transmit, and Monitor low-level FSMs 367

Annex M (informative) C-Port in Port mode using the TXI and TKP access protocol—C-Port Join, Transmit, and Monitor low-level FSMs 371

Annex N (informative) C-Port in Port mode using the TKP access protocol—Transmit and Monitor low-level FSMs 376

Annex O (informative) Channel considerations for 16 Mbit/s DTR 379

Annex Q (informative) DTR Station using the TKP access protocol—Join, Transmit, and Monitor low-level FSMs 381

Annex R (informative) C-Port in Station Emulation mode using the TKP access protocol—Join, Transmit, and Monitor low-level FSMs 385

Annex S (informative) Clause 4 TKP access protocol deletions—C-Port in Port mode and in Station Emulation mode using the TKP access protocol 389

Annex T (informative) Autodetection protocol 399

Copyright © 1998 IEEE. All rights reserved.

AVA Documents
Document Sharing Hub
Full document details: ISO_IEC 8802-5_1998_AMD1_1998

This page intentionally left blank

Documents
Document Sharing Hub

Full document details: ISO_IEC 8802-5_1998_AMD1_1998

Information technology— Telecommunications and information exchange between systems— Local and metropolitan area networks— Specific requirements—

Part 5: Token ring access method and physical layer specifications

Amendment 1: Dedicated token ring operation and fibre optic media

1. Changes to clauses 1 and 2 of ISO/IEC 8802-5 : 1998

This standard, an amendment to the existing text of the ISO/IEC 8802-5 : 1998, specifies the requirements for dedicated token ring stations and ports. It also specifies characteristics of a fibre optic interface for connecting a 4 or 16 Mbit/s token ring station to the trunk coupling unit (TCU) of a token ring. The text assumes all material, including references, acronyms, and definitions contained in the base text. The clause and subclause numbering in the following clauses corresponds to the clause and subclause numbering to be expected in a combined document (i.e., when these additions are incorporated). Unaffected clauses are skipped.

Dedicated token ring (DTR) defines a new protocol for full-duplex token ring operation, sometimes referred to as "switching." This amendment requires that all conformant DTR ports and stations be able to operate compatibly with the preexisting standard in a shared token ring environment.

The specification of token ring operation over fibre optic media, as defined within this amendment, replaces and renders obsolete ISO/IEC TR 11802-4 : 1994, Fibre optic station attachment.

1.1 Scope

Add the following to 1.1 after item q), and change the period after item q) to a semicolon:

r) Defines the dedicated token ring (DTR) media access protocols, including finite state machines (FSMs) and state tables (clause 9);

s) Defines the frame formats and MAC frames, timers, and error counters for the DTR Station and DTR C-Port (clause 10);

Copyright © 1998 IEEE. All rights reserved.

Documents
Document Sharing Hub

Full document details: ISO_IEC 8802-5_1998_AMD1_1998

t) Defines the DTR Station and C-Port Management (clause 11);
u) Provides informative information on the functional description of the DTR concentrator (annex K);
v) Provides informative information on the low-level FSMs of the DTR Station and the C-Port in Station Emulation mode using the TXI access protocol (annex L);
w) Provides informative information on the low-level FSMs of the C-Port in Port mode using the TXI and TKP access protocol (annex M);
x) Provides informative information on the low-level FSMs of the C-Port in Port mode using the TKP access protocol (annex N);
y) Provides informative information on channel considerations for 16 Mbit/s DTR (annex O);
z) Provides normative information on the BER criteria for lobe media testing (annex P);
aa) Provides informative information on the low-level FSMs of the DTR Station using the TKP access protocol (annex Q);
bb) Provides informative information on the low-level FSMs of the C-Port in Station Emulation mode using the TKP access protocol (annex R);
cc) Provides informative information on modifications to clause 4 TKP access protocol when used to support C-Port operation (annex S);
dd) Provides informative information on an optional method for DTR concentrator autodetection (annex T);
ee) Defines the functional, electrical, and optical characteristics of a fibre optic interface for connecting a 4 or 16 Mbit/s token ring station to the trunk coupling unit (TCU) of a token ring;
ff) Provides informative guidance for connecting fibre trunk cables between trunk coupling units;
gg) Describes signaling provisions for bypass of the station from the ring and self-test capabilities.

Add the following items as subjects for future study after item g):

h) Speed negotiation process.
i) Low-power protocols for managing stations and C-Ports when the MAC is suspended and the hardware is in a low-power mode.

1.2 Normative references

Add the following normative references to 1.2 of ISO/IEC 8802-5 : 1998:

IEC 60793-2 : 1989, Optical fibres—Part 2: Product specifications.

IETF RFC 1573, K. McCloghrie and F. Kastenholz, "Evolution of the Interfaces Group of MIB-II," January 20, 1994.[1]

IETF RFC 1748, K. McCloghrie and E. Decker, "IEEE 802.5 MIB using SMIv2," December 29, 1994.

IETF RFC 1902, J. Case, K. McCloghrie, M. Rose, and S. Waldbusser, "Structure of Management Information Base for Version 2 of the Simple Network Management Protocol (SNMPv2)." January 1996.

IETF RFC 1903, J. Case, K. McCloghrie, M. Rose, and S. Waldbusser, "Textual conventions for Version 2 of the Simple Network Management Protocol (SNMPv2)." January 1996.

IETF RFC 1907, J. Case, K. McCloghrie, M. Rose, and S. Waldbusser, "Management Information Base for Version 2 of the Simple Network Management Protocol (SNMPv2)." January 1996.

[1]Online copies of IETF RFCs are available via FTP from the InterNIC Directory and Database Services server, ds.internic.net, as rfc/rfc####.txt or rfc/rfc####.ps (#### is the RFC number without leading zeroes).

Copyright © 1998 IEEE. All rights reserved.
AVA Documents
Document Sharing Hub
Full document details: ISO_IEC 8802-5_1998_AMD1_1998

ISO/IEC 9314-3 : 1990, Information processing systems—Fibre Distributed Data Interface (FDDI)—Part 3: Physical Layer Medium Dependent (PMD).

ISO/IEC 9595 : 1991, Information technology—Open Systems Interconnection—Common management information service definition.

ISO/IEC 9596-1 : 1991, Information technology—Open Systems Interconnection—Common management information protocol—Part 1: Specification.

ISO/IEC 10040 : 1992, Information technology—Open Systems Interconnection—Systems management overview.

ISO/IEC 10165-1 : 1993, Information technology—Open Systems Interconnection—Management Information Services—Structure of management information: Management Information Model.

ISO/IEC 10165-4 : 1992, Information technology—Open Systems Interconnection—Structure of management information—Part 4: Guidelines for the definition of managed objects.

ISO/IEC 10165-5 : 1994, Information technology—Open Systems Interconnection—Structure of management information: Generic management information.

1.3 Definitions

Modify the following definition:

1.3.80 verified frame: A valid frame as defined in 4.3.2, addressed to the station, for which the information field has met the validity requirements as specified in 3.3.5.2 or 10.3.6.5 as appropriate.

This amendment adds new definitions to the base standard. Definitions will be resorted and renumbered in a future edition incorporating amendments into the base standard.

Add the following to 1.3:

1.3.1 bypass: The state of the fibre optic station attachment when the fibre optic trunk coupling unit (FOTCU) does not route the station signals onto the trunk ring. Instead, the station signals are returned to the station for lobe testing, and trunk signals continue along the trunk.

1.3.2 bypass key: A signaling pattern sent by a fibre optic station to leave the ring and enter the BYPASS state. This pattern consists of a low light-level detected at the fibre optic trunk coupling unit (FOTCU) for greater than 4 ms. (See 13.7.2.2.)

1.3.3 classic concentrator: Concentrator operation supporting the classic station described in clause 8.

1.3.4 classic station: A station the operates in the token passing mode only.

1.3.5 classic token ring: Token ring architecture according to clauses 3 and 4. Provides shared bandwidth to multiple nodes on a single token ring.

1.3.6 conformance test interface connector: A connector defined for the purpose of conformance testing.

Copyright © 1998 IEEE. All rights reserved.

AVA Documents
Document Sharing Hub
Full document details: ISO_IEC 8802-5_1998_AMD1_1998

1.3.7 C-Port: A concentrator port in a dedicated token ring concentrator.

1.3.8 data transfer unit (DTU): The entity in the dedicated token ring (DTR) concentrator that provides frame forwarding between C-Ports and the data transfer service (if there is one).

1.3.9 dedicated token ring (DTR): Token ring architecture according to clauses 3, 9, and 10. Provides shared bandwidth to multiple node count classic token rings or single classic stations, and enhanced full-duplex dedicated bandwidth to single stations attached to a DTR concentrator.

1.3.10 dedicated token ring (DTR) concentrator: A concentrator with C-Ports that provide shared and dedicated connectivity domains to attaching stations.

1.3.11 dedicated token ring (DTR) Station: A Station that supports the token passing protocol (TKP) and transmit immediate protocol (TXI) access protocols specified in clauses 3, 4, 9, and 10. *Note:* Within this document, "Station" when capitalized is used to indicate that the entity may be either a data station, or a C-Port in Station Emulation mode.

1.3.12 fibre: A filament-shaped optical waveguide made of dielectric materials.

1.3.13 fibre optic cable: A cable containing one or more optical fibres compatible with specifications in 13.7.2.5.

1.3.14 fibre optic channel: The data path from any transmitting station's fibre optic medium interface connection (FMIC) or transmitting concentrator's FMIC to the next receiving FMIC.

13.15 fibre optic interface (FOI): The interface between a station's physical (PHY) layer and the optical medium. It is bounded on one side by the medium interface connector (MIC) or PHY layer I/O interface, and on the other by the fibre optic medium interface connection (FMIC).

1.3.16 fibre optic medium interface connection (FMIC): The mechanical and optical interface between the station or fibre optic interface and the fibre optic cable. This is a duplex optical port at which conformance testing is performed.

13.17 fibre optic station (FODTE): A compliant token ring station with a fibre optic interface (FOI) as described in this standard.

1.3.18 fibre optic trunk coupling unit (FOTCU): A physical device that enables a fibre optic station to connect to a trunk cable. The FOTCU contains the means for inserting the fibre optic station into the ring, or conversely, bypassing the fibre optic station. *Syn:* **fibre optic concentrator lobe port**.

1.3.19 full-duplex operation: Use of the transmit immediate protocol (TXI) access protocol where data transfer between a dedicated token ring (DTR) Station and C-Port may occur simultaneously and bidirectionally.

1.3.20 insert: The fibre optic station transmit signals will be routed to the next downstream station in the ring, and input signals will be routed from the next upstream station in the ring.

13.21 insertion: A signaling pattern sent by a fibre optic station to request to join the ring (INSERT). This pattern consists of an alternating pattern of normal data signals and low light-level signals. See 13.7.2.2.

1.3.22 insertion key echo: The return of the insertion key to the station by the fibre optic trunk coupling unit (FOTCU). See 13.7.2.2.

1.3.23 lobe: A set of transmission elements in the data path between a station's transmitter and its own receiver when the station is in the Bypass state.

Copyright © 1998 IEEE. All rights reserved.
AVA Documents
Document Sharing Hub
Full document details: ISO_IEC 8802-5_1998_AMD1_1998

1.3.24 management routing interface (MRI): The management interface between the C-Port Medium Access Controls (PMAC) and the dedicated token ring (DTR) concentrator management.

1.3.25 phantom drive: A technique where a dc power source is superimposed on the transmit and receive signal pairs in a transparent or "phantom" fashion (7.2.1) such that its application does not affect the data bearing signals on either pair. For classic token ring, this dc power source is normally applied to request a concentrator to insert a station into the ring. For dedicated token ring, this dc power source is used as part of the registration process.

1.3.26 Port mode: The operation of a C-Port when configured as a port that connects to the media and waits for the start of station registration.

1.3.27 registration: The process whereby both the dedicated token ring (DTR) Station and the C-Port exchange information after the DTR Station exits the Bypass state as the result of a connection request.

1.3.28 Station Emulation mode: The operation of a C-Port when configured to emulate a station using the token passing protocol (TKP) or transmit immediate protocol (TXI) access protocol.

1.3.29 token passing protocol (TKP): Token ring protocol wherein normal data transmission occurs upon the capture of a token.

1.3.30 token passing protocol (TKP) access protocol: The classic token ring protocol specified in clauses 3 and 4 wherein normal data transmission occurs upon the capture of a token.

1.3.31 transmit immediate protocol (TXI) access protocol: The access protocol specified in clause 9 where the protocol does not require the station to gain access to a token in order to transmit information. Data transmission uses the transmit immediate function and may be full duplex.

1.5 Abbreviations and acronyms

Add the following abbreviations and acronyms to 1.5 of ISO/IEC 8802-5 : 1998:

C-Port	=	DTR concentrator port
CTIC	=	conformance test interface connector
DAC	=	duplicate address check
DRD	=	destination route descriptor
DTE	=	data terminal equipment
DTR	=	dedicated token ring
DTU	=	data transfer unit
FMIC	=	fibre optic medium interface connection
FODTE	=	fibre optic data terminal equipment
FOTCU	=	fibre optic trunk coupling unit
LMT	=	lobe media test
MRI	=	management routing interface
NA	=	numerical aperture
ORX	=	optical receiver
OTA	=	optical transmit asymmetry
OTX	=	optical transmitter
PMAC	=	DTR C-Port MAC protocol entity
PPHY	=	DTR C-Port PHY protocol entity
SMAC	=	DTR Station MAC protocol entity
SPHY	=	DTR Station PHY protocol entity
TKP	=	token passing protocol
TXI	=	transmit immediate protocol

Copyright © 1998 IEEE. All rights reserved.

AVA Documents
Document Sharing Hub
Full document details: ISO_IEC 8802-5_1998_AMD1_1998

Modify the title of 1.6 to differentiate this subclause from the DTR Station, as follows:

1.6 Conformance requirements—classic station

Add the following dynamic conformance requirement to 1.6.2 after item k):

l) Optionally perform the registration query protocol described in 9.1.5 and specified in 9.5 and 9.6.

Modify the title of 1.7 to differentiate this subclause from the DTR concentrator, as follows:

1.7 Conformance requirements—classic concentrator

Add the following after 1.7, and renumber existing 1.8 as 1.10:

1.8 DTR conformance requirements

The conformance requirements for dedicated token ring entities are described in the following subclauses. The appropriate subclauses for the classic token ring station and classic concentrator are also listed for completeness.

Subclause	Protocol	Station or port type
1.6	Classic	Classic token ring station
1.6.2	TKP	DTR Station using TKP with registration query protocol
1.7	Classic	Classic concentrator TCU port (Unchanged)
1.8.1	TXI	DTR Station
1.8.2	TKP	DTR C-Port—Port mode
1.8.3	TXI	DTR C-Port—Port mode
1.8.4	TKP	DTR C-Port—Station Emulation mode
1.8.5	TXI	DTR C-Port—Station Emulation mode

The supplier of a protocol implementation which is claimed to conform to this standard shall complete a copy of the PICS proforma in annex A and shall provide the information necessary to identify both the supplier and the implementation.

1.8.1 Conformance requirements—DTR Station

1.8.1.1 Static conformance requirements—MAC sublayer

A DTR Station implementing the TXI access protocol and claiming conformance to this standard shall

a) Implement the frame format, associated address formats and fields, and MAC frame vectors and subvectors defined in clauses 3 and 10.

Copyright © 1998 IEEE. All rights reserved.
AVA Documents
Document Sharing Hub
Full document details: ISO_IEC 8802-5_1998_AMD1_1998

b) Support 48-bit addressing and use either a universally administered individual address or a locally administered individual address as defined in 3.2.4.
c) Exhibit external behavior corresponding to the system timing parameters specified in 10.4.1.
d) Exhibit external behavior corresponding to the Station policy flags and variables specified in 10.5.1.
e) Implement capabilities corresponding to the error counters defined in 10.6.1.
f) Recognize the first bit of the source address as the indication of the presence of the routing information field in the frame format defined in 3.2.5. Note that the ability to generate or respond to frames with source routing information is optional.

1.8.1.2 Static conformance requirements—PHY layer

A DTR Station implementing the TXI access protocol and claiming conformance to this standard shall

a) Use a data signaling rate at 4 Mbit/s or 16 Mbit/s as defined in 5.2. Implementations may support either or both data rates.
b) Encode and decode symbols as defined in 5.5 and 5.6.
c) Achieve the signal timing synchronization as defined in 5.7.
d) Add latency as defined in 5.8.
e) Support either STP or UTP cabling at the MIC as defined in 7.2. Implementations may support either or both media types using the appropriate MIC connector (MIC_S for STP and MIC_U for UTP).
f) Provide phantom signaling and wire fault detection as defined in 7.2.1.
g) Meet the transmit specifications defined in 7.2.2.
h) Meet receiver jitter tolerance specifications as defined in 7.2.3.
i) Operate with the channels specified in 7.2.4.

1.8.1.3 Dynamic conformance requirements

A DTR Station requesting the TXI access protocol and claiming conformance to this standard shall perform the registration process described in 9.1.4 and 9.1.4.1, and specified in 9.2. If TXI access protocol is successfully negotiated, then the DTR Station shall

a) Complete the Join state machine functions defined in 9.2.1.1.
b) Transmit queued PDUs as frames as defined in 9.2.1.2.
c) Perform the Monitor state functions defined in 9.2.1.3.
d) Perform according to the State Operation tables specified in 9.2.5.

If TXI access protocol is not successfully negotiated, then the DTR Station may continue operating in classic token ring mode with the conformance requirements specified by 1.6.

1.8.2 Conformance requirements—C-Port/TKP/Port mode

1.8.2.1 Static conformance requirements—MAC sublayer

A DTR concentrator C-Port in Port mode and implementing the TKP access protocol and claiming conformance to this standard shall

a) Implement the token format, the frame format, associated address formats and fields, and MAC frame vectors and subvectors defined in clauses 3 and 10.
b) Support 48-bit addressing and use either a universally administered individual address or a locally administered individual address as specified in 3.2.4.

Copyright © 1998 IEEE. All rights reserved.

AVA Documents
Document Sharing Hub
Full document details: ISO_IEC 8802-5_1998_AMD1_1998

c) Exhibit external behavior corresponding to the system timing parameters specified in 10.4.2 and 3.4.
d) Exhibit external behavior corresponding to the C-Port policy flags and variables specified in 10.5.2.
e) Implement capabilities corresponding to the error counters defined in 10.6.2 and 3.6.
f) Recognize the first bit of the source address as the indication of the presence of the routing information field in the frame format defined in 3.2.5. Note that the ability to generate or respond to frames with source routing information is optional.

1.8.2.2 Static conformance requirements—PHY layer

A DTR concentrator C-Port in Port mode and implementing the TKP access protocol and claiming conformance to this standard shall

a) Use a data signaling rate at 4 Mbit/s or 16 Mbit/s as defined in 5.2. Implementations may support either or both data rates.
b) Encode and decode symbols as defined in 5.5 and 5.6.
c) Achieve the signal timing synchronization defined in 5.7.
d) Add latency as defined in 5.8.
e) Support either STP or UTP cabling at the MIC as defined in 8.1.1. Implementations may support either or both media types using the appropriate MIC connector (MIC_S for STP and MIC_U for UTP).
f) Provide static impedance capability as defined in clause 8.
g) Meet the transmit specifications defined in 7.2.2.
h) Meet the receiver jitter tolerance specifications defined in 7.2.3.
i) Operate with the channels specified in 7.2.4.
j) Provide a repeat path as specified in 9.7.1.
k) Provide a PMC as specified in 9.7.3.
l) Support the detection of phantom drive, and indicating its state to the PMAC as specified in 9.7.2.

1.8.2.3 Dynamic conformance requirements

A DTR concentrator C-Port operating in Port mode and claiming conformance to this standard shall perform the registration process described in 9.1.4 and 9.1.4.2, and specified in 9.3. If TXI access protocol is negotiated, the DTR C-Port shall meet the conformance requirements described in 1.8.3. If TKP access protocol is requested by the attached station, then the DTR C-Port shall

a) Complete the Join state machine functions defined in 9.3.1.1.
b) Transmit queued PDUs as frames defined in 9.4.2.2.
c) Perform the Monitor state functions defined in 9.4.2.3.
d) Perform according to the operation tables specified in 9.4.4.

1.8.3 Conformance requirements—C-Port/TXI/Port mode

1.8.3.1 Static conformance requirements—MAC sublayer

A DTR concentrator C-Port in Port mode and implementing the TXI access protocol and claiming conformance to this standard shall

a) Implement the frame format, associated address formats and fields, and MAC frame vectors and subvectors defined in clauses 3 and 10.
b) Support 48-bit addressing and use either a universally administered individual address or a locally administered individual address as specified in 3.2.4.
c) Exhibit external behavior corresponding to the system timing parameters specified in 10.4.2.

Copyright © 1998 IEEE. All rights reserved.
AVA Documents
Document Sharing Hub
Full document details: ISO_IEC 8802-5_1998_AMD1_1998

d) Exhibit external behavior corresponding to the C-Port policy flags and variables specified in 10.5.2.
e) Implement capabilities corresponding to the error counters defined in 10.6.2.
f) Recognize the first bit of the source address as the indication of the presence of the routing information field in the frame format defined in 3.2.5. Note that the ability to generate or respond to frames with source routing information is optional.

1.8.3.2 Static conformance requirements—PHY layer

A DTR concentrator C-Port in Port mode and implementing the TXI access protocol and claiming conformance to this standard shall

a) Use a data signaling rate at 4 Mbit/s or 16 Mbit/s as defined in 5.2. Implementations may support either or both data rates.
b) Encode and decode symbols as defined in 5.5 and 5.6.
c) Achieve the signal timing synchronization defined in 5.7.
d) Add latency as defined in 5.8.
e) Support either STP or UTP cabling at the MIC as defined in 8.1.1. Implementations may support either or both media types using the appropriate MIC connector (MIC_S for STP and MIC_U for UTP).
f) Provide static impedance capability as defined in clause 8.
g) Meet the transmit specifications defined in 7.2.2.
h) Meet the receiver jitter tolerance specifications defined in 7.2.3.
i) Operate with the channels specified in 7.2.4.
j) Provide a repeat path as specified in 9.7.1.
k) Provide a PMC as specified in 9.7.3.
l) Support the detection of phantom drive, and indicating its state to PMAC as specified in 9.7.2.

1.8.3.3 Dynamic conformance requirements

A DTR concentrator C-Port operating in Port mode and claiming conformance to this standard shall perform the registration process described in 9.1.4 and 9.1.4.3, and specified in 9.3. If TKP access protocol is requested by the attached station, and the request is granted by the C-Port, the DTR C-Port shall meet the conformance requirements described in 1.8.2. If TXI access protocol is negotiated, then the DTR C-Port shall

a) Complete the Join state machine functions defined in 9.3.1.1.
b) Transmit queued PDUs as frames as defined in 9.3.1.2.
c) Perform the Monitor state functions defined in 9.3.1.3.
d) Perform according to the operation tables specified in 9.3.4.

1.8.4 Conformance requirements—C-Port/TKP/Station Emulation mode

1.8.4.1 Static conformance requirements—MAC sublayer

A DTR concentrator C-Port in Station Emulation mode implementing the TKP access protocol and claiming conformance to this standard shall

a) Implement the token format, the frame format, associated address formats and fields, and MAC frame vectors and subvectors defined in clauses 3 and 10.
b) Support 48-bit addressing and use either a universally administered individual address or a locally administered individual address as defined in 3.2.4.
c) Exhibit external behavior corresponding to the system timing parameters specified in 3.4.2 and additionally the optional timer (TLMTR) specified in 10.4.3.

Copyright © 1998 IEEE. All rights reserved.

AVA Documents
Document Sharing Hub
Full document details: ISO_IEC 8802-5_1998_AMD1_1998

d) Exhibit external behavior corresponding to the C-Port and Station policy flags and variables specified in 10.5.1 and 10.5.2.
e) Implement capabilities corresponding to the error counters defined in 3.6.
f) Recognize the first bit of the source address as the indication of the presence of the routing information field in the frame format defined in 3.2.5. Note that the ability to generate or respond to frames with source routing information is optional.

1.8.4.2 Static conformance requirements—PHY layer

A DTR concentrator C-Port in Station Emulation mode implementing the TKP access protocol and claiming conformance to this standard shall

a) Use a data signaling rate at 4 Mbit/s or 16 Mbit/s as defined in 5.2. Implementations may support either or both data rates.
b) Encode and decode symbols as defined in 5.5 and 5.6.
c) Achieve the signal timing synchronization defined in 5.7.
d) Add latency as defined in 5.8.
e) Support either STP or UTP cabling at the MIC as defined in 7.2. Implementations may support either or both media types using the appropriate MIC connector (MIC_S for STP and MIC_U for UTP).
f) Provide phantom signaling and wire fault detection as defined in 7.2.1.
g) Meet the transmit specifications defined in 7.2.2.
h) Meet the receiver jitter tolerance specifications defined in 7.2.3.
i) Operate with the channels specified in 7.2.4.
j) Provide a repeat path as specified in 9.7.1.
k) Provide a PMC as specified in 9.7.3.

1.8.4.3 Dynamic conformance requirements

A DTR concentrator C-Port in Station Emulation mode requesting the TKP access protocol and claiming conformance to this standard shall

a) Complete the Join state machine functions defined in 9.3.1.1 and 9.5.2.1.
b) Transmit queued PDUs as frames as defined in 9.5.2.2.
c) Perform the Monitor state functions defined in 9.5.2.3.
d) Perform according to the operation tables specified in 9.3.4 and 9.5.4.

1.8.5 Conformance requirements—C-Port/TXI/Station Emulation mode

1.8.5.1 Static conformance requirements—MAC sublayer

A DTR concentrator C-Port in Station Emulation mode implementing the TXI access protocol and claiming conformance to this standard shall

a) Implement the frame format, associated address formats and fields, and MAC frame vectors and subvectors defined in clauses 3 and 10.
b) Support 48-bit addressing and use either a universally administered individual address or a locally administered individual address as defined in 3.2.4.
c) Exhibit behavior corresponding to the system timing parameters specified in 10.4.1.
d) Exhibit external behavior corresponding to the C-Port and Station policy flags and variables specified in 10.5.1 and 10.5.2.
e) Implement capabilities corresponding to the error counters defined in 10.6.1.

Copyright © 1998 IEEE. All rights reserved.
AVA Documents Document Sharing Hub
Full document details: ISO_IEC 8802-5_1998_AMD1_1998

f) Recognize the first bit of the source address as the indication of the presence of the routing information field in the frame format defined in 3.2.5. Note that the ability to generate or respond to frames with source routing information is optional.

1.8.5.2 Static conformance requirements—PHY layer

A DTR concentrator C-Port in Station Emulation mode implementing the TXI access protocol and claiming conformance to this standard shall

a) Use a data signaling rate at 4 Mbit/s or 16 Mbit/s as defined in 5.2. Implementations may support either or both data rates.
b) Encode and decode symbols as defined in 5.5 and 5.6.
c) Achieve the signal timing synchronization defined in 5.7.
d) Add latency as defined in 5.8.
e) Support either STP or UTP cabling at the MIC as defined in 7.2. Implementations may support either or both media types using the appropriate MIC connector (MIC_S for STP and MIC_U for UTP).
f) Provide phantom signaling and wire fault detection as defined in 7.2.1.
g) Meet the transmit specifications defined in 7.2.2.
h) Meet the receiver jitter tolerance specifications defined in 7.2.3.
i) Operate with the channels specified in 7.2.4.
j) Provide a repeat path as specified in 9.7.1.
k) Provide a PMC as specified in 9.7.3.

1.8.5.3 Dynamic conformance requirements

A DTR concentrator C-Port in Station Emulation mode requesting the TXI access protocol and claiming conformance to this standard shall perform the registration process described in 9.1.4 and 9.1.4.1, and specified in 9.2. If TXI access protocol is successfully negotiated, then the DTR C-Port in Station Emulation mode shall

a) Complete the Join state machine functions defined in 9.3.1.1 and 9.2.1.1.
b) Transmit queued PDUs as frames as defined in 9.2.1.2.
c) Perform the Monitor state functions defined in 9.2.1.3.
d) Perform according to the operation tables specified in 9.3.4 and 9.5.4.

If TXI access protocol is not successfully negotiated, then the DTR C-Port in Station Emulation mode may continue operating in TKP access protocol, with the conformance requirements specified in 1.8.4.

Add 1.9 as follows:

1.9 Fibre optic media conformance requirements

An implementation claiming conformance to ISO/IEC 8802-5 and operating in Station or hub mode shall meet all appropriate parameters in 1.6.1 with the following exceptions: 1.6.1.2, items f), g), h), and j) shall not apply. The exceptions are replaced by the following subclauses:

— Subclause 1.6.1.2f) is replaced by 13.7;
— Subclause 1.6.1.2g) is replaced by 13.7.2.2;
— Subclause 1.6.1.2h) is replaced by 13.7.2.3;
— Subclause 1.6.1.2j) is replaced by 13.7.2.5.

Copyright © 1998 IEEE. All rights reserved.

Documents
Document Sharing Hub
Full document details: ISO_IEC 8802-5_1998_AMD1_1998

Insert the following two clauses after 2.4:

2.5 Physical structure of a DTR network

The basic DTR network can include DTR concentrators, lobe cables, and attaching stations as shown in figure 2.5-1.

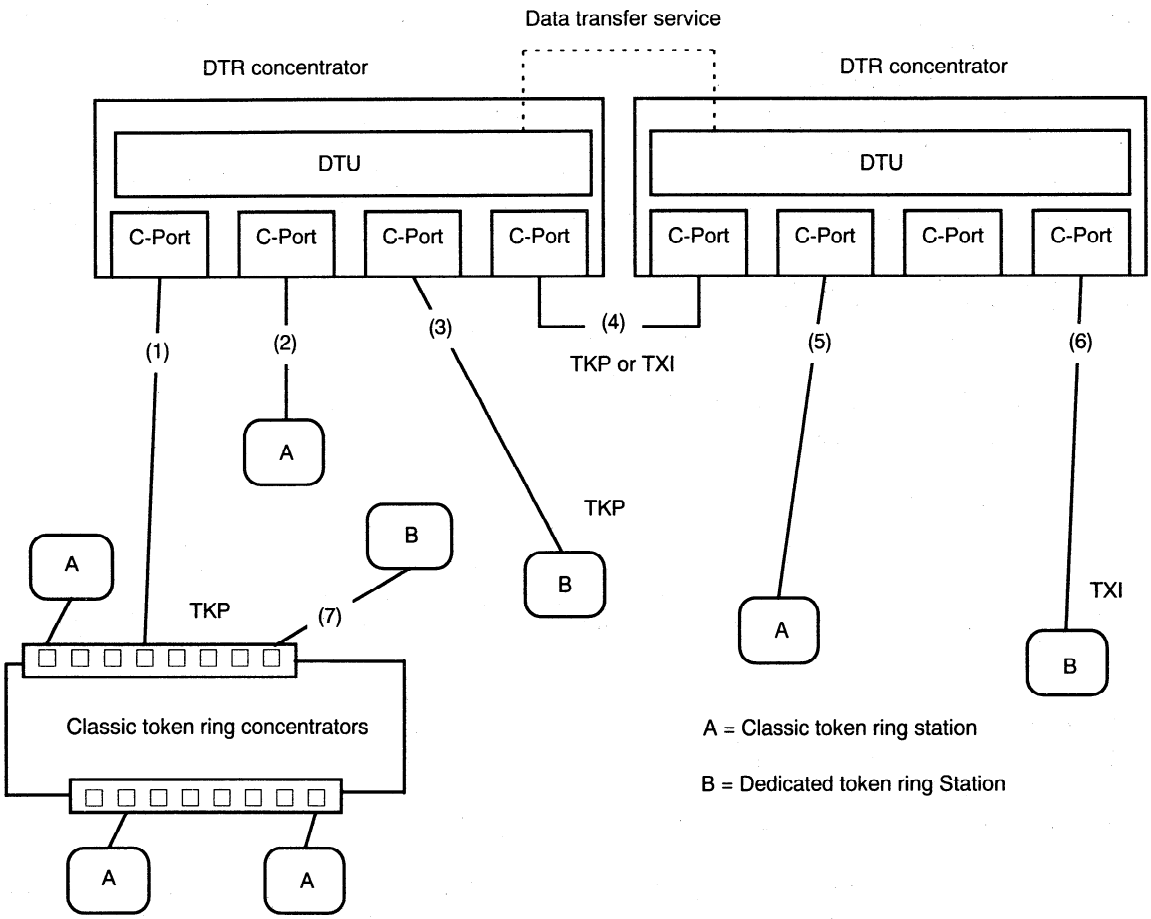

Figure 2.5-1—DTR network

The DTR concentrator consists of C-Ports and a data transfer unit (DTU). The C-Port provides the basic connectivity between the DTR concentrator and the token ring stations or other DTR concentrators by lobe cables. The DTU provides connectivity between the C-Ports within a DTR concentrator. In addition to direct connectivity between DTR C-Ports, DTR concentrators may be connected by a data transfer service [e.g., asynchronous transfer mode (ATM), fibre distributed data interface (FDDI), etc.] that allows communication using a protocol not specified by this standard or the base token ring standard. Recommendations for the DTU are found in annex K of this standard, while the specifications and use of the data transfer service are beyond the scope of this standard.

Copyright © 1998 IEEE. All rights reserved.
AVA Documents
Document Sharing Hub
Full document details: ISO_IEC 8802-5_1998_AMD1_1998

The attaching stations (A and B in figure 2.5-1) are specified by clauses 3, 5, and 7 of ISO/IEC 8802-5 : 1998 (for a classic token ring station) or 9.2 of this supplement (for a DTR Station). The TKP access protocol for data transmission requires the Station to operate as a classic token ring station while the C-Port operates as a modified classic token ring station as specified in 9.4. The TXI access protocol does not require the capture of a token to permit information transfer, and a Station may simultaneously transmit and receive frames when this protocol is in use.

From a protocol standpoint, the connection between the C-Port and a station is illustrated in figure 2.5-2. This standard defines the C-Port interfaces to the DTU, management routing interface (MRI), and management (MGT) entities. The MRI provides the interface between each C-Port and the DTR concentrator management function. The primitives that are transferred between each C-Port PMAC and management are defined in 9.1.13.2. The protocols for the C-Port PMAC and PPHY are specified in 9.3. The protocols for the station, either classic token ring or DTR, are specified in 4.3 or 9.2, respectively.

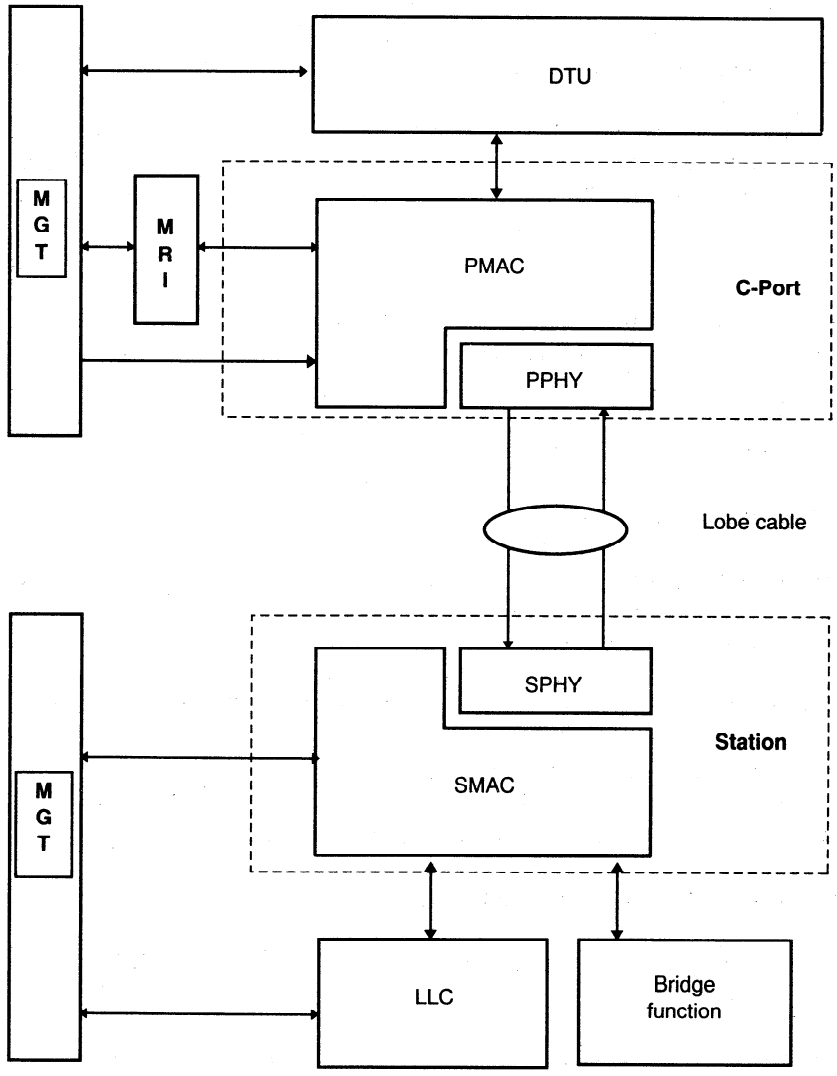

Figure 2.5-2—Architectural model of C-Port and DTR Station interfaces

Copyright © 1998 IEEE. All rights reserved.

AVA Documents
Document Sharing Hub
Full document details: ISO_IEC 8802-5_1998_AMD1_1998

2.6 Station and C-Port operating modes

2.6.1 Stations

The two Station types defined in the DTR environment are described in this subclause.

2.6.1.1 Classic token ring station

The protocol used by the classic token ring station is specified by clauses 3 and 4. The protocols and frame formats are unchanged for these stations when they are operating in the DTR environment. In figure 2.5-1 these stations are designated "A" and their connection to a DTR concentrator is illustrated by (2) and (5).

2.6.1.2 DTR Station

The DTR Station is specified in 9.2. These Stations are designated "B" in figure 2.5-1. A DTR Station shall include both the capability to perform registration by requesting the TXI access protocol in response to a Connect.SMAC command and the capability to operate as a classic token ring station. After registration, the resulting mode of operation [either the TKP access protocol as illustrated by connection (3) or the TXI access protocol as illustrated by connection (6)] will depend upon the Station's policy flags (see clause 10), as well as the capabilities of the DTR concentrator C-Port to which the Station is connected. Connection of a DTR Station to a trunk coupling unit (TCU) (see clause 8) is illustrated by connection (7) in figure 2.5-1.

2.6.2 C-Ports

Two connectivity modes for the C-Ports are defined in the DTR environment. In the Port mode, the C-Port connects to the medium and awaits the connection of either a classic or DTR Station. In the Station Emulation mode, the C-Port emulates either a classic or DTR Station. In both modes, the C-Port is responsible for forwarding frames transmitted by the station to the DTU and MRI entities for processing. These specific cases are described in the following subclauses.

2.6.2.1 C-Port operation in Port mode

There are two different operating modes for the C-Port in Port mode, and the operating mode chosen is determined by the attaching station and C-Port policy flags. The possible operating modes (TKP access protocol or TXI access protocol) are as follows:

a) DTR Stations using the classic token ring station protocol. This is illustrated by connection (3) in figure 2.5-1.
b) DTR Stations requesting attachment using the TXI access protocol. This is illustrated by connection (6) in figure 2.5-1. When the C-Port does not allow the TXI access protocol, the connection may be rejected or default to the TKP access protocol.

2.6.2.2 C-Port operation in Station Emulation mode

The C-Port in Station Emulation mode emulates a station using either the TXI or TKP access protocol as listed below.

a) The C-Port in Station Emulation mode using the TXI access protocol is illustrated by connection (4) in figure 2.5-1 and is used for the connection of two DTR concentrators.
b) The C-Port in Station Emulation mode using the TKP access protocol is illustrated by connections (1) or (4) in figure 2.5-1 and is used for the connection of
   1) Two DTR concentrators as illustrated by connection (4) or
   2) A DTR concentrator to a classic concentrator as illustrated by connection (1).

Copyright © 1998 IEEE. All rights reserved.
AVA Documents
Document Sharing Hub
Full document details: ISO_IEC 8802-5_1998_AMD1_1998

Connection (4) in figure 2.5-1, when supporting either the TKP or TXI access protocol, requires one C-Port to be operating in the Port mode and the other C-Port to be operating in the Station Emulation mode.

2.6.2.3 Cut-through operation

The interface between a C-Port and a DTU may support the transfer of frame data before the actual frame length is known.

A DTU may use this facility to support cut-through operation, in which the DTU, receiving a frame, signals that frame for transmission before the frame has been fully received. The notation "FR_LTH=UNK" is used to represent the fact that the frame length is not known.

2.6.3 TXI caution for migration from classic token ring

The use of the DTR access protocol can affect classic token ring implementations as follows:

a) Implementors are cautioned that the lobe test repeat path may set the A/C bits of the repeated frame when using frames addressed to either a broadcast address or the C-Port's MAC address.
b) Frames transmitted using the TXI access protocol are not received by the transmitting entity, even if the address is one that would be recognized by the transmitter. This differs from classic token ring with shared media, where all frames transmitted may also be received by the transmitting entity if the destination address is recognized. The State Operation tables (table 9-5 for TXI Operation, REF 3508 and REF 3511) provide loopback explicitly rather than depending on PHY layer loopback.
c) The repeat path during lobe test provided by the DTR C-Port assumes that the station performs its lobe media test at the same ring speed that is intended to be used during operation.
d) Implementors are cautioned that if a C-Port is optionally configured to operate in TXI access protocol *only*, then the C-Port will not provide a reliable repeat path during the registration state. A classic station or DTR Station operating with TKP access protocol will therefore fail lobe test and will not be able to distinguish this failure from a connectivity or cable failure.

Copyright © 1998 IEEE. All rights reserved.

AVA Documents
Document Sharing Hub
Full document details: ISO_IEC 8802-5_1998_AMD1_1998

Add a new clause 9:

9. Dedicated token ring (DTR)

This clause contains the specifications for the DTR Station and C-Port while executing the TXI or TKP access protocols.

This introduction illustrates and defines the DTR configurations supported, and concludes by describing the structure of clause 9.

Figure 9-1 illustrates the DTR configurations based on the following operational modes of the C-Port:

— Configuration 1: C-Port in Port mode using the TXI access protocol
— Configuration 2: C-Port in Station Emulation mode using the TXI access protocol
— Configuration 3: C-Port in Port mode using the TKP access protocol
— Configuration 4: C-Port in Station Emulation mode using the TKP access protocol

Each entity within each of these configurations is labeled as to the type of support (C-Port in Port mode, C-Port in Station Emulation mode, Station, or Concentrator), the access protocol being used (TXI or TKP access protocol), and which clauses define the entity.

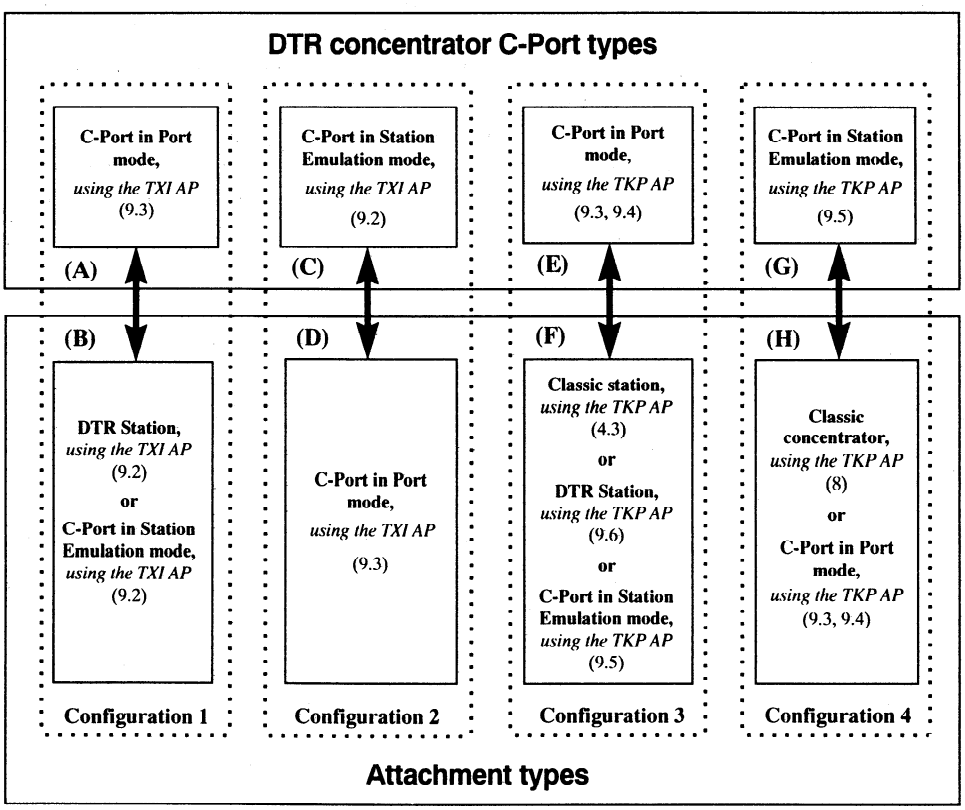

Figure 9-1—DTR Configurations 1 through 4

Copyright © 1998 IEEE. All rights reserved.
AVA Documents Document Sharing Hub
Full document details: ISO_IEC 8802-5_1998_AMD1_1998

DTR Configurations

The following configurations are identified in figure 9-1:

— Configuration 1 consists of a C-Port in Port mode using the TXI access protocol (A) and an attached DTR Station (B) or C-Port in Station Emulation mode (B).

— Configuration 2 consists of a C-Port in Station Emulation mode using the TXI access protocol (C) and an attached C-Port in Port mode (D).

— Configuration 3 consists of a C-Port in Port mode using the TKP access protocol (E) and an attached classic Station (F), DTR Station (F), or C-Port in the Station Emulation mode (F).

— Configuration 4 consists of a C-Port in Station Emulation mode using the TKP access protocol (G) and an attached classic concentrator (H) or C-Port in Port mode (H).

Configuration functions

The functions used to support Configurations 1 and 2 are covered as follows:

— The DTR Station using the TXI access protocol is defined in 9.1 and 9.2.

— The C-Port in Port mode using the TXI access protocol is defined in 9.1, 9.3, and 9.7.

— The C-Port in Station Emulation mode using the TXI access protocol is defined in 9.1, 9.2, 9.3, and 9.7.

The functions used to support Configurations 3 and 4 are covered as follows:

— The DTR Station using the TKP access protocol is defined in 9.1 and 9.6.

— The C-Port in Port mode using the TKP access protocol is defined in 9.1, 9.3, 9.4, and 9.7.

— The C-Port in Station Emulation mode using the TKP access protocol is defined in 9.1, 9.3, 9.5, and 9.7.

— The classic station is defined in clause 4.

— The classic concentrator is defined in clause 8.

Clause 9 structure

The remainder of clause 9 is structured as follows:

— **Subclause 9.1** describes the common DTR Station and C-Port functions required to support the TXI and TKP access protocols.

  The description of the classic station is found in clause 4 and is not covered in clause 9.

— **Subclause 9.2** specifies the DTR Station and the C-Port in Station Emulation mode using the TXI access protocol.

  Annex L contains informative diagrams of the low-level finite state machines (FSMs) representing the SMAC contained in the Join, Transmit, and Monitor Station Operation tables defined in 9.2.

— **Subclause 9.3** specifies the C-Port in Port mode using the TXI or TKP access protocols.

  Annex M contains informative diagrams of the low-level FSMs representing the PMAC contained in the Join, Transmit, and Monitor Port Operation tables defined in 9.3.

Copyright © 1998 IEEE. All rights reserved.

AVA Documents
Document Sharing Hub
Full document details: ISO_IEC 8802-5_1998_AMD1_1998

— **Subclause 9.4** specifies the C-Port in Port mode using the TKP access protocol. This clause defines the Transmit and Monitor functions, while the Join function is defined in 9.3.

  Annex N contains informative diagrams of the low-level FSMs representing the PMAC contained in the Transmit and Monitor Port Operation tables defined in 9.4.

— **Subclause 9.5** specifies the C-Port in Station Emulation mode using the TKP access protocol.

  Annex R contains informative diagrams of the low-level FSMs representing the PMAC contained in the Join, Transmit, and Monitor Port Operation tables defined in 9.5.

— **Subclause 9.6** specifies the DTR Station using the TKP access protocol.

  Annex Q contains informative diagrams of the low-level FSMs representing the MAC contained in the Join, Transmit, and Monitor Station Operation tables defined in 9.6.

— **Subclause 9.7** specifies the C-Port specific components and specifications used when supporting the TXI or TKP access protocols. The PHY requirements unique to the C-Port are defined by 9.7. The PHY requirements shared between classic concentrators and classic stations are defined in clauses 5, 7, and 8.

9.1 DTR TXI and TKP access protocol support

This clause provides an overview of the TKP and TXI access protocol for the DTR C-Port, DTR Station, and classic station supporting Configurations 1 through 4 shown in figure 9-1. The determination as to which configuration is being used is made by the Station and C-Port Join Operation tables defined in 9.2 and 9.3, respectively. This determination is based on policy flags, the results of the registration process, and phantom signaling detection by the C-Port.

This subclause contains an overview of the DTR Station and DTR C-Port when an implementation is using the TXI access protocol or the TKP access protocols as follows:

a) The TXI definitions used by the C-Port and Station are described in 9.1.1.
b) TXI access protocol functions used by the Station's SMAC as specified in 9.2 and the C-Port's PMAC as specified in 9.3 are discussed as follows:
   1) Protocol checking is described in 9.1.2.
   2) Error handling is described in 9.1.3.
   3) Registration is described in 9.1.4.
   4) Registration query is described in 9.1.5.
   5) Lobe media test is described in 9.1.6.
   6) Duplicate address check is described in 9.1.7.
   7) Transmit is described in 9.1.8.
   8) Heart beat is described in 9.1.9.
   9) Hard error recovery is described in 9.1.10.
   10) Soft error reporting is described in 9.1.11.
   11) Configuration control is described in 9.1.12.
   12) SMAC and PMAC service interfaces are described in 9.1.13.
c) Items 1)–12) are each described by covering the function's purpose and then, if required, covering the unique C-Port and Station support of the function.
d) The C-Port in Port mode using the TKP access protocol in support of Configuration 3 is discussed in 9.1.14. The C-Port's Port Operation tables needed to support this configuration are described in 9.4.
e) The C-Port in Station Emulation mode using the TKP access protocol in support of Configuration 4 is discussed in 9.1.15. The C-Port's Port Operation tables needed to support this configuration are specified in 9.5.

Copyright © 1998 IEEE. All rights reserved.
AVA Documents
Document Sharing Hub
Full document details: ISO_IEC 8802-5_1998_AMD1_1998

f) The DTR Station using the TKP access protocol in support of Configuration 3 is discussed in 9.1.16. The DTR Station's Station Operation tables needed to support this configuration are specified in 9.6.

9.1.1 TXI definitions

This subclause contains definitions used by the C-Port and Station, including FSM notations and interactions, PHY signal interpretation, frame identification, actions on frame errors, and C-Port/Station policy variables.

9.1.1.1 Finite state machine (FSM) notation

See 4.2.1 for the general rules controlling FSMs.

The C-Port Operation tables and Station Operation tables contain an abstract model of the DTR C-Port and Station access protocol machines. For all possible combinations of events and C-Port/Station states, the operation tables determine an unambiguous and consistent response by the C-Port or Station including the next state, if necessary, and the primitives used at the various service interfaces.

The C-Port's Port Operation tables in 9.3, 9.4, and 9.5, the Station's Station Operation tables in 9.2 and 9.6, and the FSMs defined in annexes L, M, N, and R are evaluated as follows:

a) A snapshot of the value of all event terms is taken at an instant in time.
b) All event statements are evaluated to TRUE or FALSE, depending on the truth of each element in the event statements.
c) The actions for all TRUE events are performed.
d) Actions are considered to occur simultaneously except for clock source changes, transmit sequences (e.g., SFS, EFS, or FCS), and the transmission of fill.
e) Clock source changes, transmit sequences, and the transmission of fill are started and performed as follows:

NOTE—The notation FxTI is used to mean FPTI or FSTI, FxTXC is used to mean FPTXC or FSTXC, TS=xTXN is used to mean TS=PTXN or TS=STXN, and TS=xTXD is used to mean TS=PTXD or TS=STXD. After a clock source change, 5.7.1 requires the C-Port and Station to delay at least 1.5 ms before proceeding to allow the attached entity time to synchronize to the new clock source.

1) When conditions cause the C-Port's Transmit Port Operation table or the Station's Transmit Station Operation table to transition from the Transmit Normal state (TS=xTXN) to the Transmit Data state (TS=xTXD), the following order is maintained prior to the transition:
   i) Change clock source.
   ii) Delay by at least 1.5 ms before proceeding.
   iii) Set FxTI=0.
   iv) Transmit sequences in the order presented in the FSM.
   v) State transition.
2) When conditions cause the C-Port's Transmit Port Operation table or the Station's Transmit Station Operation table to transition from the Transmit Data state (TS=xTXD) to the Transmit Normal state (TS=xTXN), the following order is maintained prior to the transition:
   i) Transmit sequences in the order presented in the FSM.
   ii) Set FxTI=1.
   iii) Change clock source.
   iv) Delay by at least 1.5 ms before proceeding.
   v) State transition.
3) When conditions cause the C-Port's Transmit Port Operation table to transition from the Repeat state (TS=PRPT) to the Transmit Normal state (TS=xTXN), the following order is maintained prior to the transition:

Copyright © 1998 IEEE. All rights reserved.

AVA Documents Document Sharing Hub
Full document details: ISO_IEC 8802-5_1998_AMD1_1998

i) Set FxTI=1.
ii) Change clock source.
iii Delay by at least 1.5 ms before proceeding.
iv) State transition.

f) Evaluation is repeated beginning with Step a).

The C-Port and Station must have a way of ordering simultaneous external events that would otherwise cause contradictory actions, for example, simultaneous frame arrival and timer expiration. Except for the case of simultaneous events, the actions associated with the set of TRUE event statements in the FSM and C-Port and Station Operation table are never contradictory. The method that a C-Port and Station use to arbitrate simultaneous events is implementation dependent and not constrained by this standard. The C-Port and Station may act on simultaneous events in any order prior to considering subsequent events.

Actions do not affect the truth of event statements until the next snapshot.

Constants used in the tables are in hexadecimal notation unless otherwise indicated.

9.1.1.2 Special optional notation used in Port and Station Operation tables

When appropriate, some of the Port and Station Operation table transitions have an action/output column that includes the notation (optional), (optional-i), (optional-x), and (optional-unk). The terms that are optional are enclosed within brackets.

The standard provides the following guidance for this notation:

notation	Meaning of notation
(optional)	New implementations are allowed to include or exclude this option.
(optional-i)	New implementations are encouraged to include this option.
(optional-x)	New implementations are encouraged to exclude this option.
(optional-unk)	Implementations supporting any transition containing the "FR_LTH=UNK" term shall implement this option.

9.1.1.3 PMAC and SMAC protocol flags

C-Port and Station protocol flags use the notation FP(name of flag) and FS(name of flag), respectively. Protocol flags, which remember the occurrence of an event for a later action, are used internal to the Port Operation tables and Station Operation tables, and are not meant to imply any implementation requirements.

All C-Port and Station protocol flags are set to 0 by the "Set_initial_conditions" action.

In general, protocol flags are set to 1 when a condition occurs and set to 0 when the condition no longer exists or when the appropriate action is taken.

9.1.1.4 C-Port interface flags

The C-Port interface flags are used by the Join Port Operation table as a method of communication between the Port Operation tables in 9.2, 9.3, 9.4, and 9.5 as follows:

— Interface flags are set to 0 by the C-Port action "Set_initial_conditions."

Copyright © 1998 IEEE. All rights reserved.
AVA Documents Document Sharing Hub
Full document details: ISO_IEC 8802-5_1998_AMD1_1998

— Interface flags are set to 1 by the C-Port upon the detection of an appropriate condition.
— Interface flags do not represent any implementation requirements.

C-Port interface flags use the notation FIP [name in the form of Access Protocol, C-Port Operation, Condition Reported (optional)]. This notation is illustrated in figure 9-2.

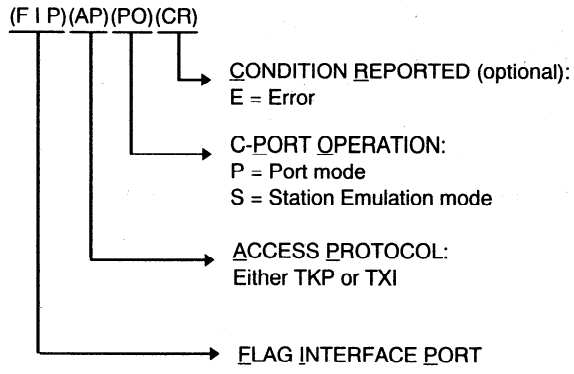

Figure 9-2—Interface flag overview

The following interface flags are defined to support Configurations 2, 3, or 4.

9.1.1.4.1 Interface flag support of the TXI access protocol

Flag, Interface C-Port TXI Station Emulation (FIPTXIS). The flag FIPTXIS is set to 1 by the Port Operation table in 9.3 when it recognizes the need to enter the C-Port in Station Emulation mode using the TXI access protocol. This flag is used by the Station Operation tables in 9.2 to activate transitions necessary to support the C-Port functions (e.g., MRI handling).

The flag FIPTXIS is used to support the Configuration 2 entity **(C)**.

9.1.1.4.2 Interface flag support of the TKP access protocol

Flag, Interface C-Port TKP Port Mode (FIPTKPP). The flag FIPTKPP is set to 1 by the Port Operation table in 9.3 when it recognizes the need to enter the C-Port in Port mode using the TKP access protocol. This flag is used by the Port Operation tables in 9.4 to activate transitions necessary to support the C-Port in this mode.

The flag FIPTKPP is used to support the Configuration 3 entity **(E)** or Configuration 4 entity **(H)**.

Flag, Interface C-Port TKP Port Mode Error (FIPTKPPE). The flag FIPTKPPE is set to 1 by the Monitor Port Operation table in 9.4 to inform the Join Port Operation table in 9.3 that the attached Station did not successfully complete its lobe media test during the Beacon Test state.

The flag FIPTKPPE is used to support Configuration 3 entity **(E)** and Configuration 4 entity **(H)**.

Flag, Interface C-Port TKP Station Emulation (FIPTKPS). The flag FIPTKPS is set to 1 by the Port Operation table in 9.3 when it recognizes the need to enter the C-Port in Station Emulation mode using the

Copyright © 1998 IEEE. All rights reserved.

AVA Documents
Document Sharing Hub
Full document details: ISO_IEC 8802-5_1998_AMD1_1998

TKP access protocol. This flag is used by the Port Operation tables in 9.5 to activate transitions necessary to support the C-Port in this mode.

The flag FIPTKPS is used to support Configuration 3 entity (**F**) and Configuration 4 entity (**G**).

9.1.1.5 Join, Monitor, and Transmit FSM interaction

This subclause and its associated figure explain the interaction of the DTR C-Port and Station TXI access protocol Join, Monitor, and Transmit FSMs. Functions performed by these C-Port and Station FSMs are defined in the TXI access protocol specification defined in 9.2.5 and 9.3.4, respectively. The Join Ring FSM is parent to the Monitor FSM and the Transmit FSM. Figure 9-3 illustrates the interaction of the Join Ring (master), Transmit (slave), and Monitor (slave) FSMs.

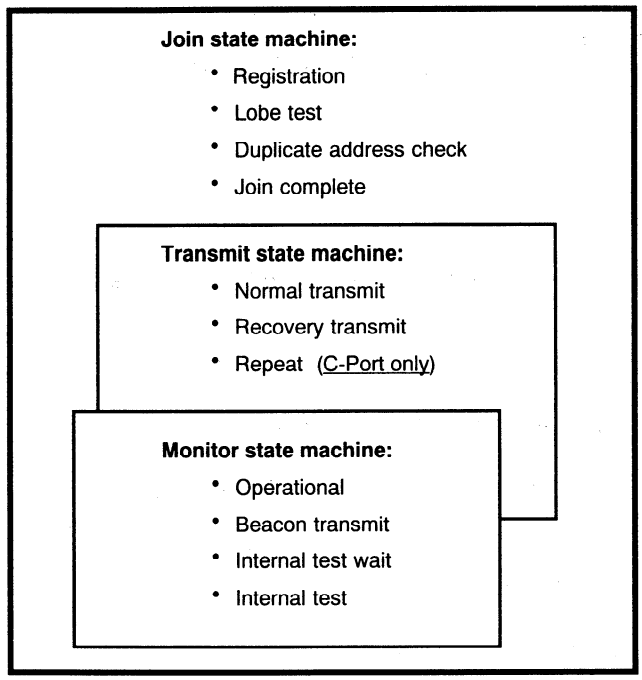

Figure 9-3—Join, Transmit, and Monitor FSM interaction

The starting state for the TKP access protocol and TXI access protocol is the Bypass state (JS=BP).

The Bypass state is the initial state of the Join FSM. A C-Port or Station completing a power-on reset sequence activates its Join FSM in this state. Entry into this state, when under FSM control, can occur due to local management action, network management action, or the detection of an uncorrectable error. Exit from this state is controlled by local management action (i.e., Connect.MAC or Connect.PMAC).

The Transmit and Monitor states (TS=x, MS=x) *are not* specified while the Join state machine is in the Bypass state (JS=BP).

The following starting conditions (i.e., power on) for the C-Port and Station FSMs are required to be established prior to leaving the Bypass state:

— Counters are set to 0.
— Event flags are set to 0.

Copyright © 1998 IEEE. All rights reserved.
AVA Documents Document Sharing Hub
Full document details: ISO_IEC 8802-5_1998_AMD1_1998

— Stored values are set to 0.
— C-Port and Station policy flags, and C-Port and Station policy variables are set according to the C-Port and Station operational policies and are set *prior* to leaving the Bypass state (JS=BP). Policy flags and policy variables are examined, but are *never* changed by the Port Operation tables or Station Operation tables.
— Timers are not running (stopped, thus cannot expire).

9.1.1.6 Frame identification

Three frame identifications are used by the TXI Port Operation tables and Station Operation tables. They are frame (FR), frame with error (FR_WITH_ERR), and frame header (FR_FC). FR and FR_WITH_ERR are defined in 4.3.2. FR_FC is defined as follows:

frame header (FR_FC). A bit sequence that indicates a frame's SD, AC, and FC fields have been received that satisfy the following conditions:

A & K & L & M & E

where

A—Starts with valid SD.
K—Has no code violations in P and T, and optionally M, and optionally R.
L—T bit is equal to 1 indicating a frame.
M—Has no code violations in the FC field.
E—Has FF bits in FC field equal to 00 or 01.

9.1.1.7 Actions on frame error conditions

The following frame error conditions are covered:

a) **Frames received in error (FR_WITH_ERR).** When a frame is addressed to a C-Port or Station and has a frame with error (FR_WITH_ERR) condition, the frame is not processed other than to count the error condition (e.g., Line Error, etc.).
b) **Transmission errors.** Transmission errors occur when the C-Port or Station in the Transmit Frame Data state (TS=PTXD or TS=STXD) is unable to complete a requested transmission. The actions taken by the FSMs are dependent on the type of error and the options used by the implementation. All actions taken cause the receiving entity to either terminate reception of the frame or to discard the frame. Conditions and actions are as follows:
   1) If the transmission error is a correctable STATION_ERR or PORT_ERR, then the Abort Sequence shall be transmitted prior to entering the Transmit Normal state (TS=PTXN or TS=STXN).
   2) If the transmission error is an uncorrectable STATION_ERR or PORT_ERR, then the Abort Sequence is optionally transmitted prior to entering the Transmit Normal state (TS=STXN or TS=PTXN) and shall cause the Join function of the Station or C-Port to enter the Bypass state (JS=BP).
   3) If the transmission error is caused by exceeding the count allowed by the counter CPBTX or CSBTX (used by the C-Port in Port mode or the C-Port in Station Emulation mode, respectively, when transmitting frames of unknown length), then one of the following two actions shall be taken depending on the option flag FPASO:
      i) If FPASO=0, then the Abort Sequence is transmitted prior to entering the Transmit Normal state (TS=PTXN or TS=STXN).
      ii) If FPASO=1, then the transmission of the frame is terminated with an invalid FCS and an Ending Delimiter with the Error Detected bit (E) set to 1 prior to entering the Transmit Normal state (TS=PTXN or TS=STXN).

Copyright © 1998 IEEE. All rights reserved.

AVA Documents
Document Sharing Hub
Full document details: ISO_IEC 8802-5_1998_AMD1_1998

9.1.1.8 TXI policy flags and variables

TXI policy flags and variables are set *prior* to the Connect.SMAC or Connect.PMAC interface startup signals and cannot be changed by the C-Port's Port Operation tables or the DTR Station's Station Operation tables. The station and C-Port TXI policy flags and variables are defined in 10.5.1 and 10.5.2, respectively.

9.1.1.9 Interpreting the FSMs

The high-level FSMs contained in 9.2 through 9.6 and the low-level FSMs contained in annexes L, M, N, Q, and R use the following set of rules.

These FSMs illustrate only the Port and Station Join, Transmit, and Monitor Operation tables even though *all* Port and Station Operation tables defined are required for correct operation.

The Join, Transmit, and Monitor FSMs can operate simultaneously. Each FSM can have only *one* state active at a time.

Figure 9-4 illustrates states and transitions as follows:

a) STATES are shown as vertical lines with the state name at the top of the line.
b) TRANSITIONS are shown as horizontal lines. They always contain an arrowhead to show a connection to a STATE and may contain a number to indicate state/transition number (e.g., J12).
   1) When state/transition numbers are present within an FSM, the first character represents the FSM (J for Join, T for Transmit, and M for Monitor), the first digit is the state being exited, and the second digit is the state being entered.
   2) Occasionally multiple transitions with different actions occur between two states and the state/transition number ends with an additional letter (e.g., J13A and J13B).
c) Entry into a STATE occurs *only* when the transition ends at a STATE with an arrowhead.
d) Some transitions are awkward to illustrate because of location within the FSM. TRANSITION J31 exits STATE J3 and enters STATE J1 [e.g., J31 labeled (A)].
e) Some transitions cross a STATE without an arrowhead, which indicates the STATE is not entered. TRANSITION J31 exits STATE J3 and enters STATE J1 [e.g., J31 labeled (B)].
f) OPTIONAL conditions are enclosed in brackets (e.g., [Condition_6]).
g) OPTIONAL actions are enclosed in brackets (e.g., [Action_6]).

Copyright © 1998 IEEE. All rights reserved.
AVA Documents Document Sharing Hub
Full document details: ISO_IEC 8802-5_1998_AMD1_1998

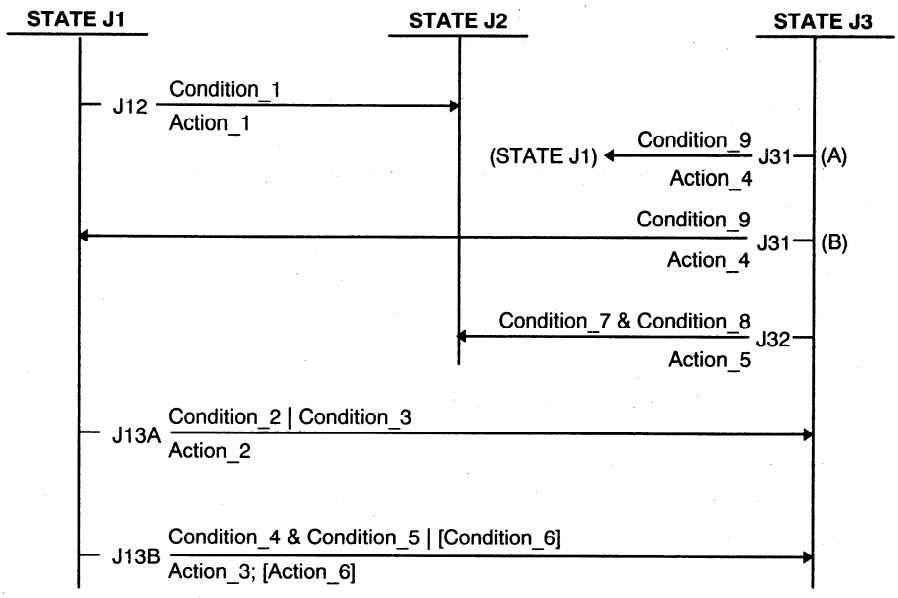

Figure 9-4—State/transitions (S/T) illustration

Figure 9-4 illustrates the following state transitions:

— STATE J1 to STATE J2 (transition J12) due to event of Condition_1, action of Action_1.
— STATE J1 to STATE J3 (transition J13A) due to event of Condition_2 OR Condition_3, action of Action_2.
— STATE J1 to STATE J3 (transition J13B) due to event of Condition_4 AND Condition_5 OR optional Condition_6, action of Action_3, or optional Action_6.
— STATE J3 to STATE J1—two different ways of illustrating the same transition.
STATE J3 to STATE J1 (transition J31) due to event of Condition_9, action of Action_4.
STATE J3 to STATE J1 (transition J31) due to event of Condition_9, action of Action_4.

The clause 9 Port and Station Operation tables Event/Condition column contains the current state, but this state is not shown in the low-level FSMs in annexes L, M, N, Q, or R since the current state is illustrated by the vertical line.

The clause 9 Port and Station Operation tables Action/Output column contains the state being entered, but this state is not shown in the low-level FSMs in annexes L, M, N, Q, or R since the state being entered is illustrated by the arrowhead connection to a vertical line.

Some of the clause 9 Port and Station Operation tables contain transitions without a state/transition entry (S/T) and, although these transitions are not shown in the FSMs in annexes L, M, N, Q, or R, they are required for proper operations.

9.1.2 TXI protocol checking

The Station and C-Port TXI *Protocol Checking* functions, when active, prevent TXI access protocol contamination. These functions are active when the Join FSM is in the following states: JS=SREG,

Copyright © 1998 IEEE. All rights reserved.

AVA Documents
Document Sharing Hub
Full document details: ISO_IEC 8802-5_1998_AMD1_1998

JS=SLT, JS=SDAC, JS=SJC, JS=PLT, JS=PDAC, and JS=PJCI. A TXI protocol check causes the C-Port or Station to

a) Return to the Bypass state (JS=BP), and
b) Notify the appropriate Management entity of this event.

9.1.3 TXI error handling

The Station or C-Port using the *TXI access protocol* can experience error conditions that are classified as either *hard errors* or *soft errors* as follows:

a) Hard errors, which are defined in 9.1.10, are faults that prevent the Station from receiving the C-Port's Heart Beat (PHB) MAC frames or the C-Port from receiving the Station's Heart Beat (SHB) MAC frames.
b) Soft errors, which are defined in 10.6, are faults that cause data corruption, but do not prevent frames from being exchanged between the C-Port and the Station.

Error detection, reporting, and recovery procedures require stations and C-Ports to identify and isolate fault conditions. In some cases, the Station and/or C-Port causing the fault condition is required to remove from the network and report the error condition to the appropriate Management entities.

All error conditions are isolated to the fault domain described in 9.1.3.1. The operational domain of the TXI access protocol, which includes the individual addresses of the station and C-Port, is established by the registration process described in 9.1.4. This operational domain is reported as the fault domain and is reported as described in 9.1.3.2 either by the Beacon MAC frame for hard errors or by the Error Report MAC frame for soft errors as follows.

— Recovery from hard error conditions is managed by Hard Error Recovery as described in 9.1.10.
— Reporting of soft error conditions is handled by the Station or C-Port as described in 9.1.11.

9.1.3.1 TXI fault domain

The C-Port and Station *fault domain* establishes a boundary around an error condition and identifies the location of the fault for the appropriate corrective action. The fault domain for the TXI access protocol consists of the following, as illustrated in figure 9-4:

a) The C-Port (A),
b) The Station (B), and
c) The components (e.g., medium, connectors, etc.) between the C-Port and the Station.

In this fault domain, error reporting is accomplished by

— The Station (B) detecting an error condition and reporting this fault condition as being downstream of the C-Port (A) or
— The C-Port (A) detecting an error condition and reporting this fault condition as being downstream of the Station (B).

9.1.3.2 TXI fault reporting

The TXI access protocol uses two reporting schemes, one for soft errors and one for hard errors. The following subclauses explain the handling of hard errors and soft errors using the fault domain illustrated by figure 9-5.

Copyright © 1998 IEEE. All rights reserved.
AVA Documents Document Sharing Hub
Full document details: ISO_IEC 8802-5_1998_AMD1_1998

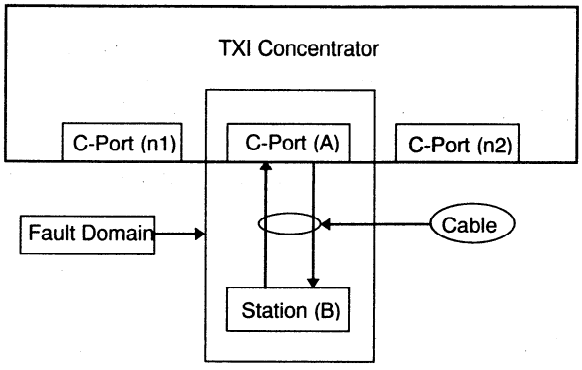

Figure 9-5—Fault domain illustration

9.1.3.2.1 Hard errors

The TXI access protocol uses the Hard Error Recovery process (see 9.1.10) in an attempt to recover from hard errors and restore normal operation. If recovery is not possible, the Beacon MAC frame identifies the fault domain for analysis by network management functions (Network Management and/or Station Management) as follows:

a) When the Station detects a hard error (e.g., broken cable) between the C-Port (A) and the Station (B), the fault domain is identified and reported by the Station (B) transmitting Beacon MAC frames. This Beacon MAC frame contains the source address of the detecting Station (B) and the address of its connected C-Port (A). This Beacon MAC frame allows the Station (B) to declare the fault domain and alert the C-Port (via the Beacon MAC frame) and its Station management that normal TXI access protocol is suspended until the hard error condition terminates or is removed. The nature of the hard error condition may make it impossible for the C-Port to receive the Station's Beacon MAC frame. When this occurs, the C-Port management will not be aware that the Station has detected an error condition.

b) When the C-Port detects a hard error (e.g., broken cable) between the Station (B) and the C-Port (A), the fault domain is identified and reported by the C-Port (A) transmitting Beacon MAC frames. The Beacon MAC frame contains the source address of the detecting C-Port (A) and the address of the Station (B). This Beacon MAC frame allows the C-Port (A) to declare the fault domain and alert the Station (via the Beacon MAC frame) and its management that normal TXI access protocol is suspended until the hard error condition terminates or is removed. The nature of the hard error condition may make it impossible for the Station to receive the C-Port's Beacon MAC frame. When this occurs, the Station management will not be aware that the C-Port has detected an error condition.

9.1.3.2.2 Soft errors

The C-Port's and Station's TXI access protocol detects and reports soft errors, and takes the following actions:

a) When the Station (B) detects a soft error (e.g., interference causing increased bit error rate) between the port (A) and the Station (B), it is reported by the Station (B) via the transmission of an

Copyright © 1998 IEEE. All rights reserved.

AVA Documents
Document Sharing Hub
Full document details: ISO_IEC 8802-5_1998_AMD1_1998

Error Report MAC frame containing the source address of the detecting Station (B), the address of its port (A), and the count of the errors detected (see 10.6). The Error Report MAC frame is sent to the REM functional address for analysis by a Management application designed for the TXI access protocol.

b) When the C-Port (A) detects a soft error (e.g., interference causing increased bit error rate) between the C-Port (A) and the Station (B), it is reported by the C-Port (A) via the transmission of an Error Report Management Status containing the source address of the detecting C-Port (A), the address of its Station (B), and the count of the errors detected (see 10.6). The Error Report is sent via a MRI status indication for analysis by a Management application designed for the TXI access protocol.

9.1.4 TXI registration

The C-Port and the Station join machines use the registration function to exchange the following information:

a) Station saves the C-Port's source address (PMAC Address) in its stored upstream address (SUA).
b) C-Port saves the Station's source address (SMAC Address) in its SUA.
c) C-Port saves the Station's individual address count (IAC) in its stored individual address count (SIAC). The Station is required to support only the SMAC address, but may optionally support multiple individual addresses. The C-Port does not support multiple individual addresses.

In addition, the C-Port and the Station join machines use registration to determine whether the Station and C-Port are compatible (e.g., if they are capable of using the same access protocols). If they are not compatible, the Registration function causes the following actions:

— The C-Port notifies the Station of the incompatibility via the Registration Response (REG_RSP) MAC frame with an AP_RSP subvector value of X'0000' and remains in its Registration state.
— The Station returns to the Bypass state and notifies the appropriate Management function.

If they are compatible, the Registration function in the C-Port notifies the Station via the Registration Response (REG_RSP) MAC frame with an AP_RSP subvector with a value of X'0002' for the TXI access protocol.

9.1.4.1 Station support of registration

After a delay controlled by the timer TSIS, the registration function determines whether the C-Port can support the TXI access protocol by setting its request counter CSREQ to a value in the range of 4 through 12 (see 9.2.3.1), resetting the pacing timer TSREQ, and transmitting the Registration Request MAC frame defined in 10.3.5.1. The Station proceeds with one of the following actions:

a) If the Station receives a C-Port response (REG_RSP MAC frame) and its AP_RSP subvector value is equal to the requested AP_REQ subvector value, the C-Port has accepted the Station's request and the Station, after delaying for a period controlled by TSLMTD, begins the TXI access protocol defined in 9.2 by entering the Station Lobe Test state (JS=SLT).
b) If the Station has not received the C-Port's REG_RSP MAC frame prior to the expiration of TSREQ and CSREQ>0, then the Station retransmits the REG_REQ MAC frame, resets timer TSREQ, and decrements CSREQ.
c) If the Station has not received the C-Port's REG_RSP MAC frame prior to the expiration of TSREQ and CSREQ=0, then the Station takes one of the following actions depending on the option flag FSOPO:
   1) If FSOPO=0, the Station attempts to join using the TKP access protocol by entering the Lobe Test state (JS=LT) defined in clause 4 for the classic station and in 9.6 for the DTR Station.

Copyright © 1998 IEEE. All rights reserved.
AVA Documents Document Sharing Hub
Full document details: ISO_IEC 8802-5_1998_AMD1_1998

2) If FSOPO=1, the Station does not allow selection of the TKP access protocol, enters the Bypass state (JS=BP), and reports this failure to Management.

d) If the Station receives a C-Port response (REG_RSP MAC frame) and its AP_RSP subvector value is X'0000' indicating the C-Port has denied the Station's request, then the Station takes one of the following actions depending on the option flag FSRDO:

1) If FSRDO=0, the Station attempts to join using the TKP access protocol and enters the Lobe Test state (JS=LT) defined in clause 4 for the classic station and in 9.6 for the DTR Station.

2) If FSRDO=1, the Station does not allow selection of the TKP access protocol, enters the Bypass state (JS=BP), and reports this failure to Management.

9.1.4.2 C-Port support of registration

The C-Port supports the registration function by entering the Registration state (JS=PREG). In the Registration state, a reliable repeat path is provided only if the C-Port is configured to support the TKP access protocol (AND(PPV(AP_MASK),0001)=0001). While in the Registration state, the C-Port waits for the Station's Registration Request (REG_REQ) MAC frame. Upon reception of the Station's Registration Request (REG_REQ) MAC frame, the C-Port examines the AP_REQ subvector value and takes one of the following actions:

— If the value of the Station's AP_REQ is not recognized by the C-Port as a valid AP_REQ value, then the C-Port denies the Station request by transmitting a registration Response (REG_RSP) MAC frame with an AP_RSP subvector value of X'000'. The C-Port remains in the Registration state (JS=PREG).

— If the value of the Station's AP_REQ when logically ANDed with the C-Port's PPV(AP_MASK) results in a value of X'0000', then the C-Port denies the Station request by transmitting a Registration Response (REG_RSP) MAC frame with an AP_RSP subvector value of X'0000'. The C-Port remains in the Registration state (JS=PREG).

— If the value of the Station's AP_REQ when logically ANDed with the C-Port's PPV(AP_MASK) results in a value of X'0002', then the C-Port accepts the Station request to use the TXI access protocol by transmitting a Registration Response (REG_RSP) MAC frame with an AP_RSP subvector value of X'0002', sets up the C-Port to support the Station's lobe test, and enters the C-Port Lobe Test state (JS=PLT).

9.1.5 Registration query protocol

The purpose of the registration query protocol is to allow two TXI capable entities connected by a dedicated lobe that have joined using the TKP access protocol to attempt to switch to the TXI access protocol. This situation could arise from a TXI capable station attempting registration before the C-Port is ready to respond.

The protocol is initiated by the C-Port completing neighbor notification and entering the Port Registration Query state (JS=PRQ). In this state, the C-Port will transmit up to five (5) Registration Query MAC frames to the attached station. If the Station is configured to respond to the Registration Query MAC frames, the Station drops phantom, delays for the time specified by TSRW (allows the C-Port to detect phantom loss and change states) and reenters the Registration state (JS=SREG) to begin the registration process. While in the Registration Query state (JS=PRQ), the C-Port responds to the loss of phantom by entering its Registration state (JS=PREG).

If the Station does not drop phantom while the C-Port is in JS=PRQ and CPRQ decrements to zero, the C-Port ends registration query and completes the Join process (JS=PJCP).

9.1.6 TXI lobe media test (LMT)

The station, with support of the C-Port, uses the LMT function to determine if the lobe is operating at an acceptable bit error rate (BER).

Copyright © 1998 IEEE. All rights reserved.

AVA Documents
Document Sharing Hub
Full document details: ISO_IEC 8802-5_1998_AMD1_1998

9.1.6.1 Station support of the LMT

The Station is responsible for the execution of the LMT function to determine if the lobe has an acceptable BER. The Station's LMT normally uses the TEST MAC frame to test the lobe. The Station's LMT may use other frames for testing, but shall not use the Ring Recovery MAC frames (BN, CT, and RP) nor the Neighbor Notification MAC frames (AMP and SMP). The Station transmits the frame and then checks this frame at its receiver for error conditions. The pass/fail criteria for BER calculations are specified in annex P.

9.1.6.2 C-Port support of the LMT

The C-Port is responsible for providing a repeat path (see 9.7) to allow the Station to test the lobe as stated in 9.1.6.1.

9.1.7 TXI duplicate address check (DAC)

The DTR Station and C-Port use DAC to determine whether the Station has an individual address acceptable to the DTR concentrator's data transfer unit (DTU) defined in annex K. It is intended that the scope of the DAC should be the set of MACs connected to the ports on a DTR concentrator that together comprise one logical ring (K.3.2.2). The DAC is completed when the C-Port's Insert Response (INS_RSP) MAC frame is sent as the result of the Station's transmitting an Insert Request (INS_REQ) MAC frame.

9.1.7.1 Station support of DAC

9.1.7.1.1 Start DAC function

The Station starts its DAC function by transmitting the Insert Request (INS_REQ) MAC frame and waits for the C-Port's INS_RSP MAC frame. The Station takes one of the following actions:

a) If the Station receives an INS_RSP MAC frame with a response code of X'8020' (indicating the Station's address is detected as a duplicate address), the Station does not remain attached to the DTR concentrator, enters the Bypass state (JS=BP) and notifies the appropriate Management functions.
b) If the Station receives an INS_RSP MAC frame with a response code of X'0000' (indicating the Station's address is not detected as a duplicate address), the Station enters the Join Complete state (JS=SJC).

9.1.7.1.2 Terminate DAC function

The Station's DAC function is terminated by the occurrence of the following events:

a) If the Station's timer TSJC expires prior to the reception of the C-Port's INS_RSP MAC frame, the Station enters the Bypass state (JS=BP) and notifies the appropriate Management functions.
b) If the Station's timer TSRHB expires while the station is in Duplicate Address Check (JS=SDAC), the Station enters the Bypass state (JS=BP) and notifies the appropriate Management functions.

9.1.7.2 C-Port support of DAC

The C-Port starts the DAC function during registration and completes DAC when it receives the Station's INS_REQ MAC frame and a response from the DTU interface [DTU_DAC.response(RC)] by transmitting the Insert Response (INS_RSP) MAC frame. The C-Port takes one of the following actions:

a) A C-Port transmits an INS_RSP MAC frame with a response code of X'8020' if a duplicate address is detected and terminates support of the Station by returning to the Bypass state (JS=BP).

Copyright © 1998 IEEE. All rights reserved.
AVA Documents
Document Sharing Hub
Full document details: ISO_IEC 8802-5_1998_AMD1_1998

b) A C-Port transmits an INS_RSP MAC frame with a response code of X'0000' if a duplicate address is not detected and completes Join by entering the Join Complete TXI state (JS=PJCI).

9.1.8 TXI Transmit function

The C-Port and Station TXI Transmit functions operate as shown figure 9-6. This figure illustrates the TXI Transmit functions allowing frames to be transmitted: first, by requiring the conditions to be met; and second, by allowing the selection of Transmit Immediate frames (TXI_REQ) for transmission prior to the transmission of any queued frames (QUE_PDU).

The C-Port and Station may support multiple transmit queues even though figure 9-6 does not illustrate multiple queues. If multiple queues are supported, the operation of these queues is not standardized other than to require the condition and selection capabilities.

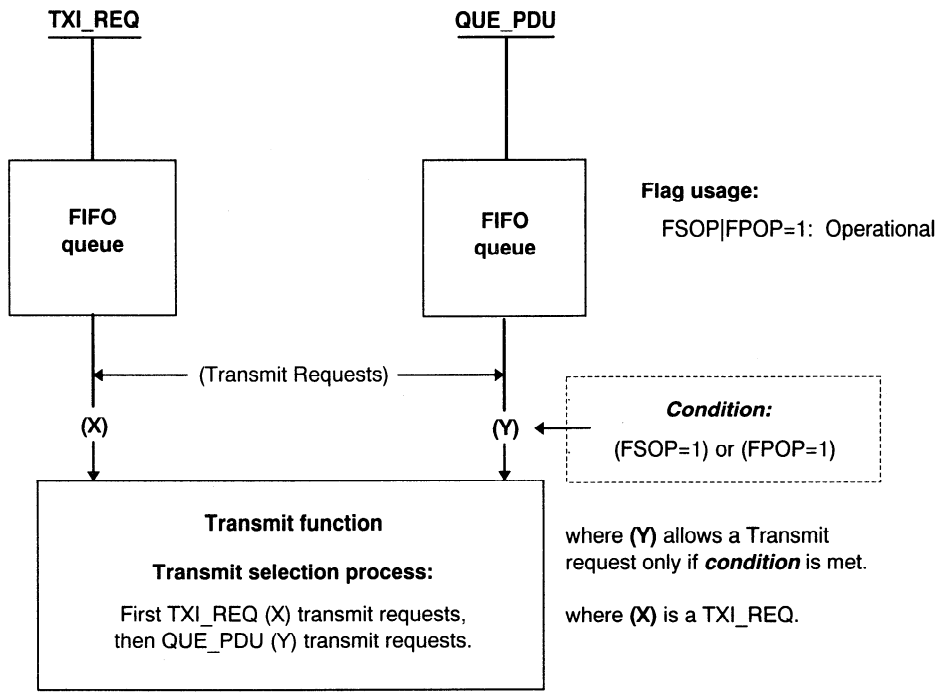

Figure 9-6—C-Port and Station Transmit function

9.1.8.1 Station TXI Transmit function

The Station's TXI Transmit function is supported by two states, Transmit Normal (TS=STXN) and Transmit Data (TS=STXD), as follows:

a) **Transmit Normal state (TS=STXN).** This is the normal state for the Station's TXI Transmit function. In this state, the Station is transmitting idles from either its crystal (FSTXC=1) or its recovered clock (FSTXC=0). Flag FSTXC is set by the join and monitor machines.

If a transmit request is made, the Station honors the condition and selection scheme identified in 9.1.8, provides the appropriate starting frame sequence, and enters the Transmit Data (TS=STXD) state.

Copyright © 1998 IEEE. All rights reserved.

AVA Documents Document Sharing Hub
Full document details: ISO_IEC 8802-5_1998_AMD1_1998

b) **Transmit Frame Data state (TS=STXD).** This state is used by the Station or the C-Port in the Station Emulation mode to transmit the frame's data. The data is transmitted until one of the following conditions is detected:
   1) The Station or the C-Port in the Station Emulation mode has no more data to transmit (EOD reached), releases the end-of-frame sequence (EFS), and returns to the Transmit Normal state (TS=STXN).
   2) The Station or the C-Port in the Station Emulation mode detects a transmission error and takes one of the actions defined under 9.1.1.7b), Transmission error.

9.1.8.2 C-Port TXI Transmit function

The C-Port's TXI Transmit function is supported by three states, Transmit Normal (TS=PTXN), Transmit Frame Data (TS=PTXD), and Transmit Repeat (TS=PRPT).

a) **Transmit Normal state (TS=PTXN).** This is the normal state for the C-Port's TXI Transmit function. During this state, the C-Port is transmitting idles (FPTI=1). The clock source is dependent on the state of the Join FSM as follows: prior to entering JS=PDAC, the clock source is recovered from the input signal (FPTXC=0); after entering JS=PDAC and in JS=PJCI, the clock source is its crystal (FPTXC=1).

   When a transmit request is made (TXI_REQ or QUE_PDU) *and* a repeat request has not been made (FPRPT=0), the C-Port honors the condition and selection scheme identified in 0, turns off transmit idles (FPTI=0), transmits the appropriate starting frame sequence, and enters the Transmit Data state (TS=PTXD).

   When a repeat request is made (FPRPT=1), the C-Port turns off crystal transmit (FPTXC=0) so its transmit signal is derived from the recovered clock, repeats received data (FPTI=0), and enters the Transmit Repeat state (TS=PRPT).

b) **Transmit Frame Data state (TS=PTXD).** This state is used by the C-Port to transmit frame data. The data is transmitted until *one* of the following conditions is detected:
   1) The C-Port detects it has no more data to be transmitted (EOD), releases the end-of-frame sequence (EFS), and returns to the Transmit Normal state (TS=PTXN).
   2) The C-Port detects a transmission error and takes one of the actions defined under 9.1.1.7b), Transmission error.

c) **Transmit Repeat (TS=PRPT).** This state is used by the C-Port to provide a repeat path to support the Station's TXI LMT function defined in 9.1.6.

   This repeat path, which is activated by the Transmit Normal state (TS=PTXN) detecting the flag FPRPT=1, is not required to examine data being repeated, but the C-Port must receive any frame with a destination address equal to any of its addresses.

   This repeat path is deactivated upon detection of the flag FPRPT being set to 0. The C-Port starts transmitting idles (FPTI=1), changes its clock source to its crystal (FPTXC=1) if FPOP=1, and returns to the Transmit Normal state (TS=PTXN).

   The characteristics of the repeat path used by the C-Port are found in 9.7.

9.1.9 TXI Heart Beat

9.1.9.1 Function

The TXI Heart Beat function is used to determine if the link between the C-Port and Station is operative as follows:

a) If the C-Port detects the presence of the Station Heart Beat MAC frame or the Station detects the presence of the C-Port Heart Beat MAC frame, they each reset their respective Heart Heat timers (TPRHB or TSRHB), and the TXI Heart Beat function continues.

Copyright © 1998 IEEE. All rights reserved.
AVA Documents Document Sharing Hub
Full document details: ISO_IEC 8802-5_1998_AMD1_1998

b) If the C-Port detects the absence of the Station Heart Beat MAC frame or the Station detects the absence of the C-Port Heart Beat MAC frame by the expiration of their respective Heart Heat timer (TPRHB or TSRHB), they each take one of the following actions:
   1) If Join has been completed, they enter hard error recovery (see 9.1.10).
   2) If Join has not been completed, they enter the Bypass state (JS=BP).

9.1.9.2 Activation/Deactivation

The TXI Heart Beat function is activated and deactivated by the Heart Beat Active flags, FPHBA and FSHBA, as follows:

a) When the flags FPHBA=0 or FSHBA=0, the C-Port and Station TXI Heart Beat function is inactive.
b) When the flags FPHBA=1 or FSHBA=1, the TXI Heart Beat function is active and the C-Port and the Station use their Queue Heart Beat timers (TPQBH or TSQHB) to pace the transmission of the C-Port Heart Beat MAC frames and Station Heart Beat MAC frames, respectively.

9.1.9.3 Station support of TXI Heart Beat

The Station's TXI Heart Beat function is activated by setting flag FSHBA to 1 when it detects the successful completion (TEST_OK) of its LMT and by entering its DAC state (JS=SDAC).

If the Station receives a C-Port Heart Beat MAC frame prior to the expiration of its Receive Heart Beat timer TSRHB, then the Station resets TSRHB and the TXI Heart Beat function continues without interruption.

If the Station fails to receive a C-Port Heart Beat MAC frame before its Receive Heart Beat timer TSRHB expires (a TXI Heart Beat failure is detected), then the Station takes one of the following actions:

a) If Join is complete (FSJC=1), then the Station disables the TXI Heart Beat function by setting flag FSHBA to 0 and enters Hard Error Recovery (MS=STBN).
b) If Join is not complete (FSJC=0), then the Station enters its Bypass state (JS=BP) and notifies Management of the failure.

9.1.9.4 C-Port support of TXI Heart Beat

The C-Port's TXI Heart Beat function is activated by setting flag FPHBA to 1 when the C-Port detects the completion of the Station's LMT due to the reception of the Station's Insert Request (INS_REQ) MAC frame. This event causes the C-Port to enter its Duplicate Address Check state (JS=PDAC).

If the C-Port receives a Station Heart Beat MAC frame prior to the expiration of its Receive Heart Beat timer TPRHB, then the C-Port resets TPRHB and the TXI Heart Beat function continues without interruption.

If the C-Port fails to receive a Station Heart Beat MAC frame before its Receive Heart Beat timer TPRHB expires (a TXI Heart Beat failure is detected), then the C-Port takes one of the following actions:

a) If Join is complete (FPJC=1), then the C-Port disables the TXI Heart Beat function by setting flag FPHBA to 0 and enters Hard Error Recovery (MS=PTBN).
b) If Join is not complete (FPJC=0), then the C-Port enters its Bypass state (JS=BP) and notifies Management of the failure.

Copyright © 1998 IEEE. All rights reserved.

AVA Documents
Document Sharing Hub
Full document details: ISO_IEC 8802-5_1998_AMD1_1998

9.1.10 TXI Hard Error Recovery

Hard Error Recovery is a simple function used by the TXI access protocol to recover from a C-Port, lobe, or Station failure that prevents communication between the Station and the C-Port. One of the major changes made to the TXI access protocol's support of Hard Error Recovery (from the TKP access protocol's support of Hard Error Recovery) is to always require the C-Port and station to execute the Station's lobe media test. This change eliminates the TKP access protocol's shortcoming of the beacon transmitter successfully completing beacon test even though the lobe is operating at an unacceptable BER.

A hard error is detected by the C-Port when Join has completed (FPJC=1) and one of the following conditions occurs:

— The C-Port's TXI Heart Beat function fails, causing entry into the Beacon Transmit state (MS=PTBN).
— The C-Port receives a Beacon MAC frame while in its Operational state (MS=POPT), causing entry into the Port Internal Test state (MS=PIT).

A hard error is detected by the station when Join has completed (FSJC=1) and one of the following conditions occurs:

— The Station's TXI Heart Beat function fails, causing entry into the Beacon Transmit state (MS=STBN).
— The Station receives a Beacon MAC frame while in its Operational state (MS=SOPT), causing entry into the Wire Fault Delay state (MS=SWFD).

The TXI Hard Error Recovery scheme, illustrated in figure 9-7, consists of the C-Port and Station Beacon Transmit states, the Station's Wire Fault Delay state, and the C-Port and Station Internal Test states. These states operate as described in the following subclauses.

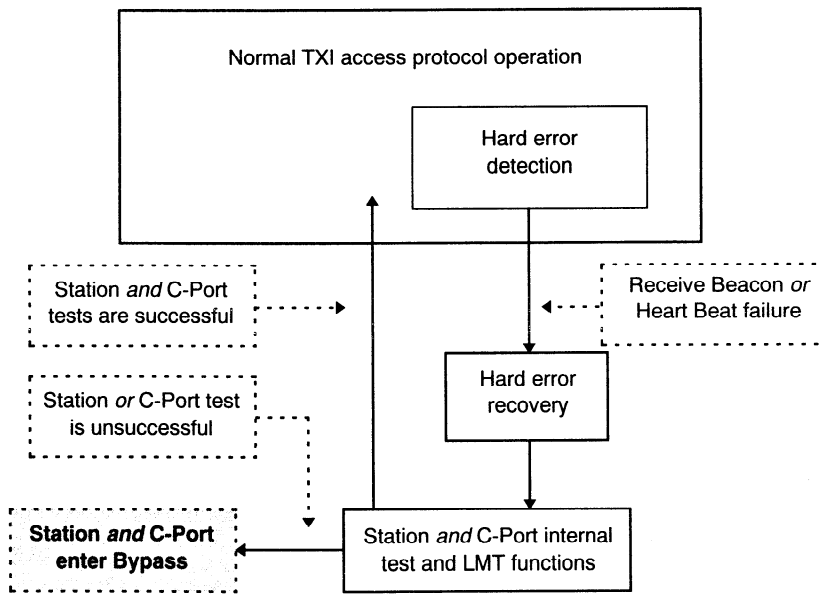

Figure 9-7—Hard error recovery

Copyright © 1998 IEEE. All rights reserved.
AVA Documents Document Sharing Hub
Full document details: ISO_IEC 8802-5_1998_AMD1_1998

9.1.10.1 Beacon Transmit state (MS=STBN or MS=PBNT)

A TXI Heart Beat function (see 9.1.9) failure causes the C-Port and Station to enter the Beacon Transmit state (MS=PTBN and MS=STBN, respectively) and transmit a Beacon MAC frame containing the reason for Beaconing (Beacon Type) and the address of its upstream entity (UNA). Once the Beacon Transmit state has been entered, the C-Port and Station always execute their internal tests as follows:

— When the C-Port enters the Beacon Transmit state, it resets the timer TPIT. Expiration of TPIT causes the C-Port to enter its Internal Test state (MS=PIT).
— When the Station enters the Beacon Transmit state, it reset the timer TSIT. Expiration of the timer TSIT causes the Station to enter its Internal Test state (MS=SIT).

For Management reporting purposes, Hard Error Recovery relies on the Beacon MAC frame and its Beacon Type subvector. When the TXI Heart Beat fails, the C-Port's and/or Station's Beacon Transmit state sets the value of the beacon type subvector by examination of the flag, signal loss (FPSL or FSSL). Subsequent values of the beacon type subvector are dependent upon the value of the flag, signal loss (FPSL or FSSL). The following is an explanation of each beacon type used in Beacon Transmit.

— **Beacon Type 2.** The C-Port or Station *has* detected the presence of a long-term loss of signal by FPSL=1 or FSSL=1. An example of a Beacon Type 2 condition is a break in the medium causing either the Station or C-Port to be unable to detect receive signal.
— **Beacon Type 5.** The C-Port or Station *has* detected a Heart Beat failure, but *has not* detected the presence of a long-term loss of signal by FPSL=0 or FSSL=0. Beacon Type 5 may be caused by bit streaming (i.e., data received does not correspond to expected protocol). An example of a Beacon Type 5 condition is when the C-Port or Station is stuck transmitting fill.

9.1.10.2 Station Wire Fault Delay state (MS=SWFD)

The Station's Wire Fault Delay state is entered when the Station receives a Beacon MAC frame with SA=SUA indicating it is upstream from the fault. This delay allows the station enough time to detect a wire fault condition that may be the cause of C-Port's beaconing before attempting to continue with Hard Error Recovery.

Upon entry into the Wire Fault Delay state, the station causes its timers, TSIT and TSLMT, to be reset. When the timer TSIT expires and the Station has not detected a wire fault condition, the Station continues Hard Error Recovery by entry into its Internal Test state (MS=SIT). The timer TSLMT is used by the Station to start execution of its lobe test (JS=SLT).

9.1.10.3 Internal Test states (MS=SIT or MS=PIT)

The Station's Internal Test state (MS=SIT) is entered when the timer TSIT expires. The C-Port's Internal Test state (MS=PIT) is entered when the timer TPIT expires or when the C-Port receives a Beacon MAC frame (SA=SUA) while in the Operational state (MS=POPT) or the Beacon Transmit state (MS=PTBN). Internal testing begins on entry into the MS=PIT or MS=SIT states.

The exact requirements of the C-Port and Station internal tests are not specified by this standard. However, it is recommended that the Station and C-Port entities test as much of their internal circuitry as possible, since the Station or C-Port has determined that a fault condition exists. This prevents the Hard Error Recovery function from providing incorrect fault information to Management entities.

The C-Port and station internal test states operate as follows:

a) If the C-Port or Station internal tests are unsuccessful, the failing entity removes itself from the TXI lobe connection and reports to its Management entity.

Copyright © 1998 IEEE. All rights reserved.

AVA Documents
Document Sharing Hub
Full document details: ISO_IEC 8802-5_1998_AMD1_1998

It is possible for the C-Port to remove from the TXI lobe connection without the knowledge of the Station or the Station to remove from the TXI lobe connection without the knowledge of the C-Port. In order to diagnose the cause of such a failure, an external agent must coordinate the error reports from the C-Port and Station. The definition of the external agent is outside the scope of this standard.

b) If the C-Port and Station internal tests are successful, the Station and C-Port prepare their Join functions to execute the Station's LMT as follows.
   1) The Station waits for timer TSLMT to expire before causing the Station's Internal Test state to inform its join machine to reenter the Station's Lobe Test state (JS=SLT) by setting FSBNT=1 (see 9.2.3.2).
   2) The C-Port waits for the loss of Phantom Drive (FPINSD=0) before enabling its repeat path (see 9.7.1) by FPRPT=1 and informing its join machine to reenter the C-Port's Lobe Test state (JS=PLT) by setting FPBNT=1 (see 9.3.3.2).

9.1.11 TXI soft error reporting

When a C-Port or station detects a soft error condition (e.g., an FCS error), it increments the appropriate error counter (see 10.6). The expiration of TSER or TPER causes the value of the error counters to be reported using the Station's Error Report MAC frame or the C-Port's MRI. The error counters are reset after they have been reported. Persistent errors can be detected, isolated, and, if required, the necessary action can be taken by Management.

9.1.12 TXI configuration control

As part of the function of maintaining the network configuration, the CRS can alter the configuration of the network by requesting DTR Stations or C-Ports to remove themselves from the network. The CRS can also query DTR Stations or C-Ports for various status information. The CRS can also configure the DTR Station, and optionally the DTR C-Port, using the Change Parameters MAC frame.

9.1.13 DTR service interfaces

The following subclauses define the service interfaces supported by the Station's SMAC and the C-Port's PMAC.

9.1.13.1 TXI SMAC service interfaces

The LLC, Bridge, and Management interfaces are specified to provide the service required by other standards. These interfaces serve to specify operation and do not imply any particular implementation.

9.1.13.1.1 Service to LLC

On receipt of a MA_UNITDATA.request primitive from the local LLC entity, the SMAC shall compose a frame using the parameters supplied to create the FC, DA, SA, RI (if present), INFO (user data) fields and calculate the FCS field. The RII bit shall be set to 1 if and only if routing information is present. The value of the YYY bits shall be either the value of the User_priority parameter (recommended) or may optionally be set to B'000'. The frame is then queued for transmission. If the Destination_address parameter matches the Station's individual address, matches one of the Station's group addresses, matches an active functional address, or matches one of the broadcast addresses, then an MA_UNITDATA.indication is made to the local LLC entity.

If a valid LLC frame is received with a DA that matches the Station's individual address, matches one of the Station's group addresses, matches an active functional address, or matches one of the broadcast addresses, then an MA_UNITDATA.indication is made to the local LLC entity. The value of the User_priority parameter shall be equal to the value of the YYY bits in the FC field.

Copyright © 1998 IEEE. All rights reserved.
AVA Documents Document Sharing Hub
Full document details: ISO_IEC 8802-5_1998_AMD1_1998